uemme
TOOLS and EQUIPMENT

WORKHOLDING TECHNOLOGY AND AUTOMATION FROM A SINGLE SOURCE

HAINBUCH
WORKHOLDING TECHNOLOGY

6 GERMAN LOCATIONS

11 INTERNATIONAL SUBSIDIARIES

WORLDWIDE MORE THAN **850** EMPLOYEES

OVER **1000** SPECIAL CLAMPING SOLUTIONS PER YEAR

FOUNDED IN **1951**

INDUSTRY **4.0** DIGITAL FUTURE SOLUTIONS

OVER **45** DESIGN ENGINEERS

SPANNTOP INVENTED IN **1977**

IQ CLAMPING DEVICES WITH INTELLIGENCE

LIGHTWEIGHT CLAMPING DEVICES **CFRP** MADE OF CARBON FIBER

MORE THAN **150** PATENTS

INHALT

HAINBUCH			1
HAINBUCH profile			4
The HAINBUCH SYSTEM			6
Solutions			14
Industries			14
Machining processes			16
Services			18
Products			20
Chucks			20
TOPlus mini chuck			26
TOPlus premium chuck		NEW	46
TOPlus chuck			58
SPANNTOP mini chuck			72
SPANNTOP nova chuck			92
Manual chuck TOROK			122
InoFlex manual / power chuck		NEW	134
Jaw chuck B-Top			144
Jaw chuck B-Top3			148
Eccentric chuck			158
Machine specific chucks			162
Mandrels			172
Mandrel MANDO			176
Mandrel MANDO G			210
Mandrel MAXXOS			214
Mandrel actuating units ms dock / hs dock			226
Machine-specific mandrels			234
Stationary clamping devices			236
Manual stationary chuck MANOK			240
Manual stationary chuck MANOK plus			244
Hydraulic stationary chuck HYDROK			252
InoFlex centric clamping vise		NEW	260
Adaptation clamping devices			266
MANDO Adapt [mandrel adaptation]			270
Jaw modules			316
Face driver / morse taper adaptation			324
Magnet module			332
Test and measurement technology			336
TESTit clamping force measuring device			336
Automation			350
IQ clamping devices with integrated measurement intelligence			352
AC [automated change] Line		NEW	356
Vischer & Bolli Automation		NEW	362
Quick change-over systems			364
centroteX / mandoteX			366
CENTREX duo			398
Special solutions			402
Special chucks			404
Special segmented mandrels			409
Special stationary clamping devices			413
Special test and measurement technology			414
Special clamping elements			415
Special quick change-over systems		NEW	416
Clamping elements			418
Clamping heads			420
Clamping heads SE			422
Clamping heads RD			430
Special clamping heads			438
Segmented clamping bushings			440
Segmented clamping bushings RD			442
Segmented clamping bushings SE			448

Jaws			452
	Jaws for jaw chucks B-Top and B-Top3		454
	Jaws for InoFlex manual / power chuck	NEW	458
	Jaws for InoFlex centric clamping vise	NEW	467
	Jaws for jaw modules		472
Accessories			476
Quick reference overview			478
End-stop system vario part			480
End-stop system vario quick			483
End-stop system vario flex			494
End-stop blanks			496
Front end-stops			502
Chip protection rings			505
Adaptation ring HAINBUCH SYSTEM			508
Insert bushings jaw chuck			510
Clamping head adapter		NEW	513
Flanges / drawtube adapters / drawtubes			517
Adapter for air sensing control			524
Base plate for TOROK			526
Adaptation sets for MANDO G211			528
Tandem cylinder / base plate for HYDROK			530
Multiple clamping pallets			533
hainBOX system for proper storage			535
Changing fixtures			537
Alignment set		NEW	540
Grease			542
Various			545
Services			546
Consulting & engineering			548
Product service			550
On-site installation			550
On-site service			550
Repair & spare parts			550
Maintenance & reconditioning			550
Service contract			551
Clamping force measurement			551
Factory calibration of TESTit			551
24-hr troubleshooting hotline			551
campus – training & events			552
Equipment for multi spindle			554
Gildemeister			564
INDEX			570
Schütte			581
Tornos			595
Facts worth knowing			598
Conditions & Forms			600
Explanations & Glossary of clamping technology terms			608
Contact			612

Our experts are there for you.

Order hotline	+49 7144. 907-333	Quickly ordered, quickly delivered. Just give us a call.
Delivery hotline	+49 7144. 907-222	Current status of your order? Simply call.
24-hr troubleshooting hotline	+49 7144. 907-444	Has there been a crash or another technical emergency?

Profile





TRADITION COMBINED WITH INNOVATION

Every story has its beginning somewhere. Our story begins in a garage in a small town in Southern Germany. Since then we have grown globally, have celebrated great successes, but we have also mastered a challenge or two. With our first invention, the »clamping head«, we turned the clamping device market upside down. We develop and change with a look into the future, but we never forget our roots. This is our story.

We love what we do

Our mission is to be the best clamping device brand worldwide. We want to facilitate and revolutionize workholding technology processes. Everything we do, we do with passion. We are pioneers and trendsetters for modern clamping solutions and problem solvers for particularly tricky clamping challenges. And one trophy certainly is ours: World-champion for quick change-over systems.

Simple, but brilliant

We are a supplier of high-precision clamping solutions that are superior in terms of durability and accuracy. Our products are easy to handle, process-optimized, and offer a long service life. Whether intelligent chucks with integrated electronics, or clamping devices in CFRP lightweight design, we want to develop products that always achieve top performance.

Key advantages

- HAINBUCH develops, designs and produces clamping devices for workholding on milling, turning, and grinding machines
- Third-generation family owned business
- Founded in 1951
- More than 850 employees worldwide
- Headquarters in Marbach am Neckar, Germany
- 5 German locations [Lindau, Mönchengladbach, Niederstetten, Satteldorf and Mosbach]
- 11 international subsidiaries [Austria, China, France, Great Britain, Italy, Japan, Mexico, Slovakia, Sweden, USA]
- Over 40 agencies worldwide



Sylvia Rall,
Gerhard Rall

The HAINBUCH SYSTEM

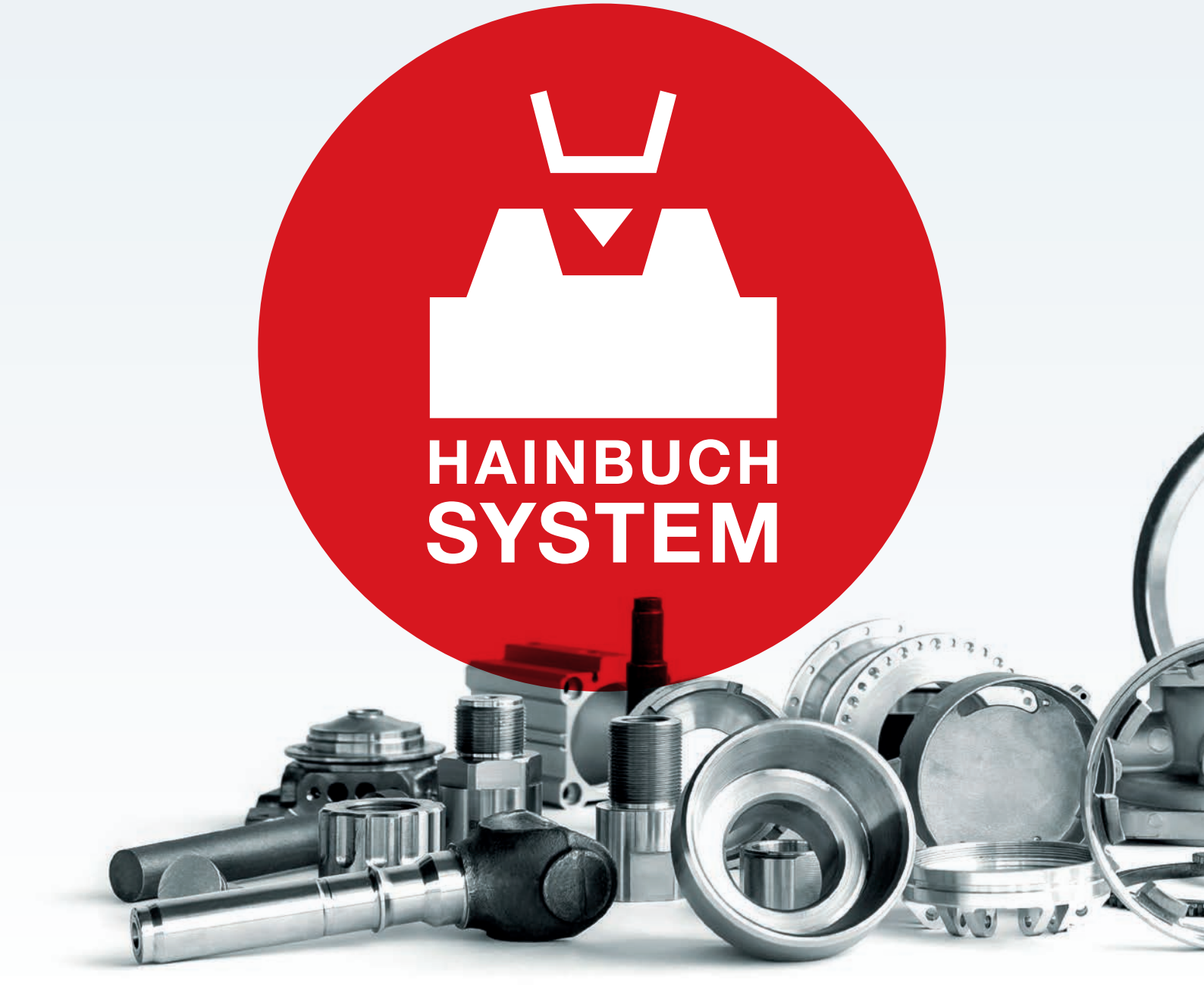

Adapts to your workpiece

Our HAINBUCH SYSTEM is truly a transformation artist. You can use it to clamp 1,000 different workpieces – no matter how complex or different they may be. Adaptations give you everything you need for complete machining. The workpiece and the machining process define the adaptation and convert your basic clamping device – which remains on the machine – for the particular application.

What does this mean? You can quickly switch to a different adaptation [O.D., I.D. or jaw clamping] without the need for alignment. This makes your processes extremely flexible, so that you can easily squeeze in short-term jobs.



The HAINBUCH SYSTEM

HAINBUCH SYSTEM

CLAMPING DEVICES



Chucks

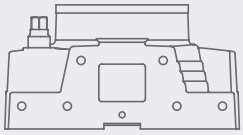

Stationary chucks

CLAMPING ELEMENTS AND ADAPTATIONS

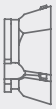

Clamping head
for O.D. clamping

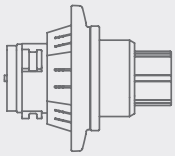

MANDO Adapt
Adaptation for I.D. clamping

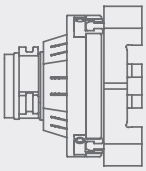

Jaw module
Adaptation for jaw clamping

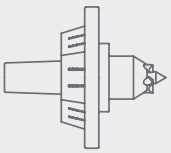

Face driver / Morse taper
Adaptation for clamping
between centers

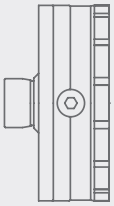

Magnet module
Adaptation for magnetic clamping

TWO CLAMPING GEOMETRIES

SE variant [hexagonal]

On the market since 2005 –
clamping geometry of the future.

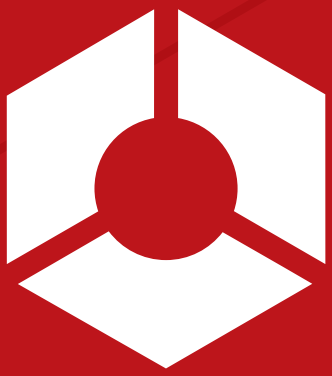

RD variant [round]

On the market since 1980 –
invented by HAINBUCH.



Two clamping geometries

The basic clamping devices, clamping elements & adaptations of the HAINBUCH SYSTEM are available in both clamping geometries.

SE variant [hexagon]

The hexagon TOPlus version offers an additional 25 % increase in holding power relative to the RD variant – thanks to full-surface contact of the clamping element in the clamping device body.

Additional benefits over the RD variant

- Higher metal removal rates, higher output, lower piece costs
- Vibration dampening effect
- Particularly efficient for difficult machining
- Sealed against contamination from outside – low maintenance, consequently less machine downtime and increased process reliability. Particularly useful for fine-particle non-ferrous metals such as brass or even cast iron. Consequently also particularly well suited for stationary machining.
- Optimal lubrication due to lubricating grooves in the chuck body
- Full through-bore or top face run on the workpiece or front end-stop

The SE variant is indicated by this symbol [in the header]

TOPlus mini chuck



TOPlus chuck



TOROK manual chuck



MANOK plus manual stationary chuck



HYDROK hydraulic stationary chuck





SPANNTOP mini chuck



SPANNTOP nova chuck



TOROK manual chuck



MANOK plus manual stationary chuck



HYDROK hydraulic stationary chuck

RD variant [round]

The well-known SPANNTOP version with round clamping geometry in the chuck body and clamping head offers significantly greater holding power than what is offered by traditional 3-jaw chucks or clamping collets, thanks to the pull-back effect and circumferential clamping.

Your benefits

- High rigidity
- Precise concentricity
- Fast change-over
- Full through-bore or top face run on the workpiece or front end-stop

The RD variant is indicated by this symbol [in the header]

One system, two basic variants, even more possibilities.

The HAINBUCH SYSTEM





Clamping head
for O.D. clamping

- Circumferential clamping
- 3 different versions: for raw material, precise machining, or for in-house machining
- An abundance of profile clamping possibilities
- Coolant-resistant, rubber-metal connection, prevents chips in the chuck
- Clamping range SE Ø 3–100 mm, Clamping range RD Ø 3–160 mm



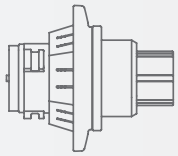

MANDO Adapt
Adaptation for I.D. clamping*

- Quick change-over from O.D. to I.D. clamping without adjusting due to the CENTREX interface
- Ideal for 5-sided machining
- High rigidity
- Clamping range Ø 8–190 mm



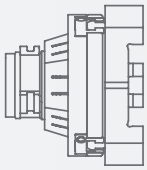

Jaw module
Adaptation for jaw clamping

- Deadlength 3-jaw or 2-jaw clamping
- Can be used rotating [under RPM] and for stationary applications
- Enlarges clamping range of the basic clamping device
- Machining between the jaws is possible [milling or drilling]



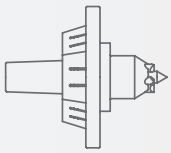

Face driver / Morse taper
Adaptation for center clamping

- Incredible flexibility
- Self-centering of the adaptation in the chuck ≤ 0.003 mm
- Extremely quick change-over without disassembling the chuck [1 min.]



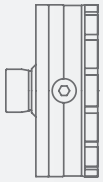

Magnet module
Adaptation for magnetic clamping

- End face axial clamping via neodymium magnet
- High face-run change-over accuracy
- High holding power of 140 N/cm²
- Assembly in 30 seconds without alignment

* Run-out accuracy < 0.005 mm between chuck taper and mandrel taper
Repeatability < 0.003 between stationary clamping device and mandrel taper

Clamping head change-over

10 sec.



Clamping device with clamping head | Remove clamping head | Clamping device without clamping head | Insert clamping head | Clamping device set-up

Change-over to mandrel adaptation

1 min.

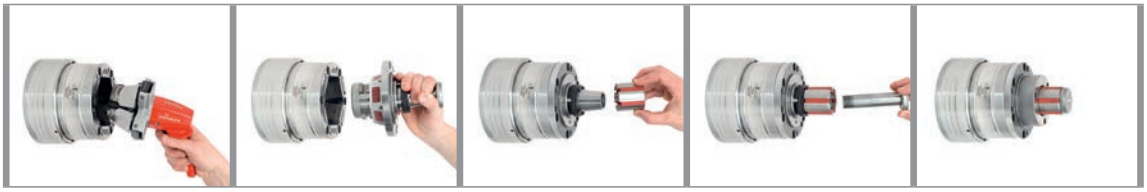

Remove clamping head | Insert MANDO Adapt T211 | Fit on segmented clamping bushing | Screw in draw bolt | Clamping device set-up

Change-over to jaw module

2 min.



Clamping device with clamping head | Remove clamping head | Insert jaw module | Secure jaw module | Clamping device set-up

Change-over to face driver adaptation

1 min.

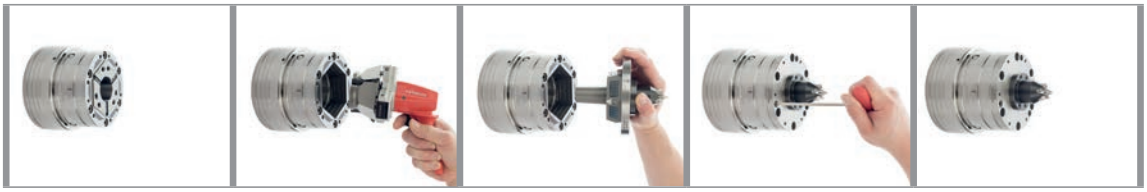

Clamping device with clamping head | Remove clamping head | Insert face driver | Secure face driver | Clamping device set-up

Change-over to magnet module

30 sec.

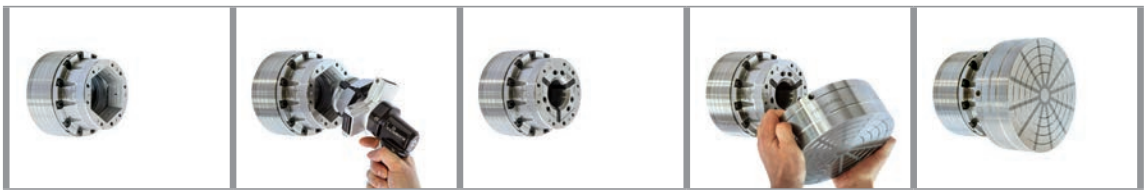

Remove clamping head | Insert magnet module clamping head | Clamping device with clamping head | Insert magnet module | Clamping device set-up





MOBILITY

Flexible manufacturing with reliable processes is crucial for success in the automotive industry. Whether for the engine, chassis, transmission or any other component – we develop and manufacture clamping systems that guarantee economical machining and reliable processes.
E-mobility requires manufacturers and suppliers to rethink: The drive train in electric propulsion concepts has considerably fewer mechanically stressed components, and fewer rotating components than combustion engines. The workpieces in an electric car that require machining are much smaller and more delicate. In addition, there will be an increase in aluminum and other lightweight materials. Therefore, use of machine tools will require more flexibility in the future, since the process can change fundamentally depending on the propulsion concept.

Your benefits

- Highest process reliability for small and large-scale production
- Flexibility in manufacturing for different parts and varying lot sizes
- Clamping solutions for high-precision transmission components, thin-walled sheet metal parts, NF metal or plastic components



AUTOMATION

Smart automated processes are everywhere, whether in everyday life or in production facilities. The increasing individualization of products, culminating in efficient one-off production, also necessitates rethinking in manufacturing planning – machines and systems have to be flexible and designed for automatic set-up.
To help you easily meet the challenges of automation and maximize the potential for savings, our focus in recent years has been on developing automation solutions. Whether you only want to automate the clamping device change-over or require complete manufacturing cells, we offer solutions to meet your requirements. Everything is user-friendly and efficient – just as you have come to expect from HAINBUCH.

You buy the machine, we do the rest.

Your benefits

- Automated change-over of clamping heads and clamping devices
- Solutions for automated workpiece loading
- One contact for comprehensive automation projects

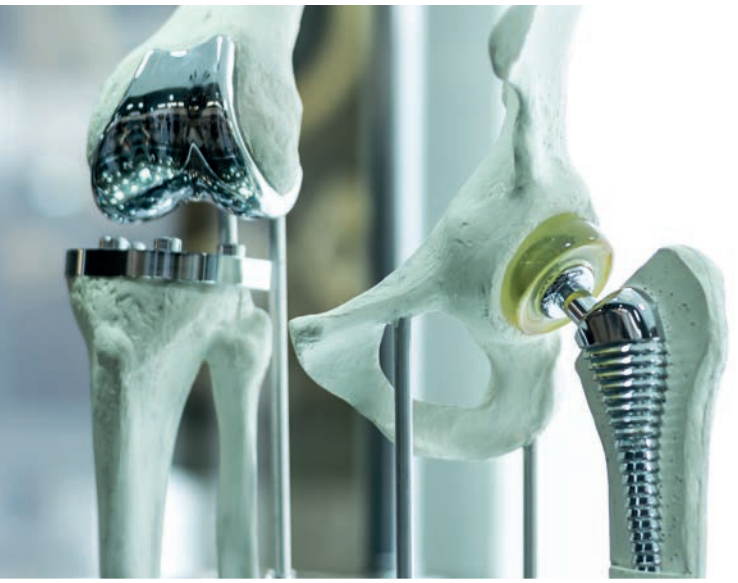

MEDICAL

Given its high degree of innovation and the rapid pace of development, without a doubt medical technology is one of the most demanding industries. It is not just the high standards for hygiene and the bio-compatible materials that are difficult to machine, it is also the technical requirements imposed on tolerances and roughness values that necessitate extremely complex production processes. And here it is a good thing when there is a clamping device manufacturer like us, with years of experience and many innovative clamping solutions, who can help and advise the industry.

Your benefits

- Already-implemented, first-class clamping solutions for many workpieces and implants, such as hip socket, hip joint, spinal implant or dental screw
- Manufacture workpieces with precise contours and the highest quality
- Sensitive, mark-free and residue-free clamping of ceramic workpieces is just as possible as powerful clamping of titanium





AEROSPACE

In the aerospace industry the most rigorous requirements are imposed on accuracy, precision, and safety. Every start is a trial of strength for the components and every component is a technical challenge for machinists. And not just because the workpieces are complex and difficult to machine, the materials are also very special from the machining perspective: nickle-based alloys, titanium, and carbon fiber reinforced plastics [CFRP]. Therefore, with our machining and material know-how we are the right partner – after all we were the first with a CFRP clamping system.

Your benefits

- Proven clamping solutions that are already in use at our customers' facilities
- High precision workholding technology for high precision components
- An expert partner in the area of innovative materials, such as CFRP





MILLING

Complete high-precision, multi-axis machining of milled parts imposes the most rigorous quality demands on the clamping device. On one hand, due to the immense forces that occur when milling and to avoid vibration, the workpiece must be securely clamped. On the other hand, high accessibility of the workpiece is necessary, i.e. the clamping solution should be as compact as possible.

- High metal removal rates due to higher holding forces as compared to vise or jaw chuck
- Good tool accessibility through a wide variety of chucking possibilities with the HAINBUCH SYSTEM
- Less tool wear through vibration-damped clamping, and unequaled rigidity due to a full-surface contact of the clamping segments



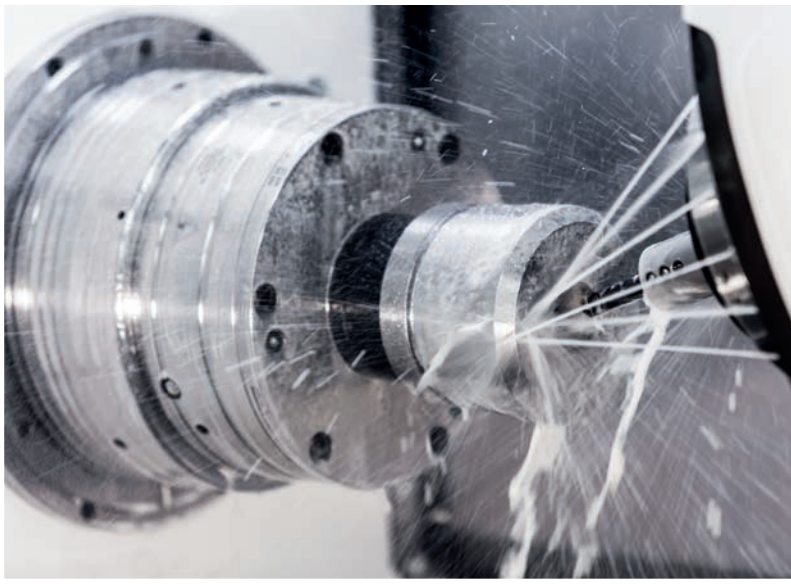

TURNING

Special criteria are in force for selection of the right clamping device for turning. Through the rotation of turned parts, at high speeds in particular, centrifugal forces occur that require secure clamping of the workpieces. HAINBUCH clamping solutions are perfect in this regard. Whether chucks for O.D. clamping or mandrels for I.D. clamping – absolutely reliable clamping and the highest run-out accuracy are guaranteed with HAINBUCH.

- Less inertia loss relative to jaw chuck by clamping within the chuck body
- Change-over from O.D. to I.D. clamping or jaw clamping in max. 2 minutes without accuracy losses
- Circumferential workpiece clamping with the highest run-out accuracy



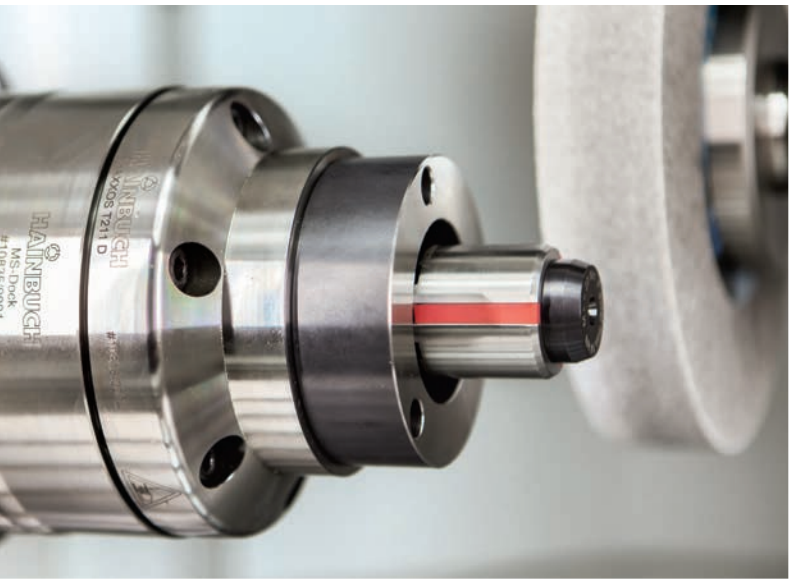

GRINDING

Modern manufacturing that involves grinding requires flexible and in particular high-repeatability clamping devices. In this regard each application imposes different requirements of the clamping technology. To achieve the required accuracy, among other things, it is important that any contamination [e.g. grinding slurry] is prevented from penetrating into the clamping device. Thanks to the large contact area of the clamping segments, our hexagonal TOPlus chucks and MAXXOS mandrels are significantly less sensitive to contamination than previous clamping devices. And thus unique in the market.

- Maximum concentricity and axial run-out accuracy
- Lightweight design model [CFRP], thus the spindle load is reduced and there is additional vibration dampening
- A higher surface quality is possible than with jaw or collet chucks
- Protrusion lengths of the workpiece are possible that are longer than is the case with jaw chucks, due to the unique clamping geometry





GEAR CUTTING

The gear cutting industry imposes the highest requirements on the accuracy of clamping devices. The machining of gears is a complex process in which the right technology is essential. In this regard, all integrated components must meet the most rigorous requirements for precision. Consideration of the interference contour plays a major role here. Whether for gear units, drive systems or all other components in this area: We have the right clamping solutions – for small and large-scale production.

- Better tool accessibility thanks to the significantly reduced interference contour
- Workpiece stabilization through axial draw force against the workpiece end-stop
- Process reliability through the possibility of positioning the clamping elements
- Special mandrel for I.D. clamping when gear cutting: MANDO G



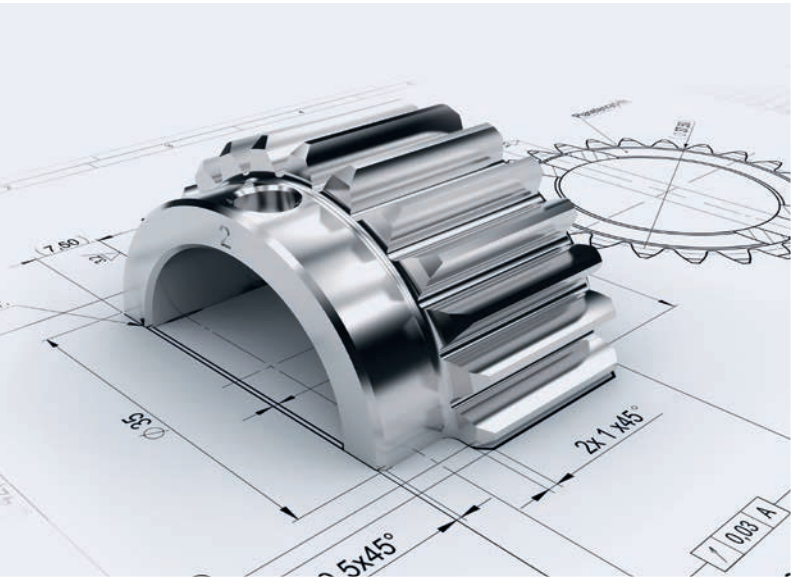



CONSULTING & ENGINEERING

Smaller batch sizes and increasing parts variety in combination with ever more stringent tolerance specifications, more complex design and functional geometries – those are the challenges of modern production. But you hardly have time to constantly scrutinize, analyze and research your manufacturing processes. Let us do that for you, because we are well acquainted with everything involved in the process chain. 60 % of our business is one-off manufacturing. In addition to production coaching, our strength lies in the development of new products when the market has nothing suitable to offer. We work with you to develop the perfect special clamping solution – tailored to your requirements. And we also think about how to streamline, for example by eliminating measuring processes thanks to clamping devices with integrated sensors.

- Technical upgrading of older machines
- Optimization of set-up times
- Efficient parts manufacturing [improved quality of parts and less scrap]
- From the analysis to the custom developed product



PRODUCT SERVICE

If you have one of our clamping devices, then you should also receive the best possible support. In addition to a free 24-hour hotline in the event of a crash or emergency, we also offer you a extensive range of services. Because we know how important proper assembly and start-up, fast repairs, reliable spare parts service and regular maintenance are. Our specialists can be at your location in a jiffy when you need them. They make sure that our clamping devices deliver top results for a long time.

- On-site installation
- On-site service
- Repair & spare parts
- Maintenance & reconditioning
- Service contract
- Clamping force measurement
- Factory calibration of TESTit
- 24-hr troubleshooting hotline





TRAINING

The reality is that to be successful, you must continuously optimize your production processes, with a view toward digitization and automation. And who always has to be up to date in order to achieve that? Your employees! Motivated, satisfied and specially trained employees with technical expertise contribute to the company's success. Our training measures offer many practical benefits and are designed for optimal integration of the learnings in your everyday work processes. The combination of theory and practice makes it vivid and easy to understand. And if your time is scarce, then we will send an instructor to your location, or you are welcome to take part in one of our free webinars.

- Impulses for new ideas and strategies
- Knowledge advantage for your employees
- Simplified processes
- Optimal set-up processes in practice



Overview

Find what's important fast



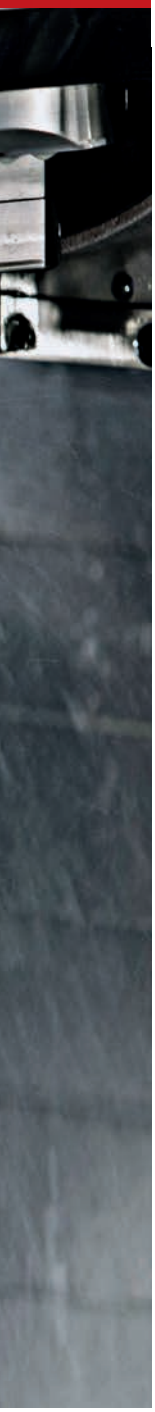

Chucks


TOPlus mini chuck 26


TOPlus premium chuck 46


TOPlus chuck 58


SPANNTOP mini chuck 72


SPANNTOP nova chuck 92


Manual chuck TOROK 122


InoFlex manual / power chuck 134


Jaw chuck B-Top 144


Jaw chuck B-Top3 148


Eccentric chuck 158


Machine specific chucks 162

Standard chucks in overview

	TOPlus mini	TOPlus premium	TOPlus
			
Description	Chuck with hexagonal clamping geometry and minimal interference contour	Chuck with hexagonal clamping geometry, minimal interference contour and high-precision run-out	Chuck with hexagonal clamping geometry
Sizes	26, 40, 52, 65, 80, 100	26, 40, 52, 65, 80, 100	52, 65, 100
Clamping range of all sizes [mm]	3 – 100	3 – 100	3 – 100
Variant	SE [hexagonal]	SE [hexagonal]	SE [hexagonal]
Advantages	■ 25 % higher holding power than SPANNTOP ■ Significantly reduced interference contour ■ Improved tool accessibility	■ Run-out accuracy ≤ 5 µm with premium clamping heads, otherwise ≤ 10 µm [requires clamping against the workpiece end-stop] ■ For precise and powerful clamping ■ Less expensive than hydro-expansion and diaphragm clamping devices	■ 25 % higher holding power than SPANNTOP ■ Unequalled rigidity due to full-surface contact of the clamping segments ■ Superior resistance to contamination because of the clamping head geometry ■ Absorbs vibration
Clamping elements	 Clamping head SE	 Clamping head SE	 Clamping head SE
Adaptations	 MANDO Adapt T211 SE [Mandrel-in-clamping-device, with draw bolt]  MANDO Adapt T212 SE [Mandrel-in-clamping-device, without draw bolt]  Jaw module SE [Adaptation for jaw clamping]  Face driver SE / Morse taper adapter SE [Adaptation for clamping between centers]  Magnet module SE [Adaptation for magnetic clamping]	 MANDO Adapt T211 SE [Mandrel-in-clamping-device, with draw bolt]  MANDO Adapt T212 SE [Mandrel-in-clamping-device, without draw bolt]  Jaw module SE [Adaptation for jaw clamping]  Face driver SE / Morse taper adapter SE [Adaptation for clamping between centers]  Magnet module SE [Adaptation for magnetic clamping]	 MANDO Adapt T211 SE [Mandrel-in-clamping-device, with draw bolt]  MANDO Adapt T212 SE [Mandrel-in-clamping-device, without draw bolt]  Jaw module SE [Adaptation for jaw clamping]  Face driver SE / Morse taper adapter SE [Adaptation for clamping between centers]  Magnet module SE [Adaptation for magnetic clamping]
	Page 26	Page 46	Page 58

SPANNTOP mini	SPANNTOP nova	TOROK	InoFlex
			
Chuck with round clamping geometry and minimal interference contour	Chuck with round clamping geometry	Manually actuated chuck	Compensating 4-jaw chuck
32, 42, 52, 65, 80, 100	32, 42, 52, 65, 80, 100, 125, 160	52, 65, 80, 100	165, 215, 260, 315
3 – 100	3 – 160	3 – 100	8 - 315
RD [round]	RD [round]	SE [hexagonal] / RD [round]	
■ Significantly reduced interference contour ■ Improved tool accessibility ■ Ideal for limited installation space	■ Ideal for customers with existing RD clamping heads ■ Typical features of all HAINBUCH power chucks, such as high holding power, parallel clamping with high accuracy and easy set-up ■ Minimal inertia loss compared to 3-jaw chucks	■ Also available in a CFRP light-weight design ■ Manual actuation – a clamping cylinder is not required ■ Sensitive clamping possible ■ Workpiece stabilization through axial draw force applied against the workpiece end-stop	■ 4-sided clamping [2x2] with compensation of the opposing jaws ■ Ideal for clamping workpieces that are susceptible to deformation ■ For I.D. and O.D. clamping ■ High repeatability and run-out accuracy
 Clamping head RD	 Clamping head RD	 Clamping head SE  Clamping head RD	 Jaws
 MANDO Adapt T211 RD [Mandrel-in-clamping-device, with draw bolt]  MANDO Adapt T212 RD [Mandrel-in-clamping-device, without draw bolt]  MANDO Adapt T812 RD [Mandrel-in-clamping-device, without draw bolt]  Jaw module RD [Adaptation for jaw clamping]  Face driver RD / Morse taper adapter RD [Adaptation for clamping between centers]  Magnet module RD [Adaptation for magnetic clamping]	 MANDO Adapt T211 RD [Mandrel-in-clamping-device, with draw bolt]  MANDO Adapt T212 RD [Mandrel-in-clamping-device, without draw bolt]  MANDO Adapt T812 RD [Mandrel-in-clamping-device, without draw bolt]  Jaw module RD [Adaptation for jaw clamping]  Face driver RD / Morse taper adapter RD [Adaptation for clamping between centers]  Magnet module RD [Adaptation for magnetic clamping]	 MANDO Adapt T211 SE / RD [Mandrel-in-clamping-device, with draw bolt]  MANDO Adapt T212 SE / RD [Mandrel-in-clamping-device, without draw bolt]  Jaw module SE / RD [Adaptation for jaw clamping]  Face driver Morse taper adapter SE / RD [Adaptation for clamping between centers]  Magnet module SE / RD [Adaptation for magnetic clamping]	 InoZet pendulum bridge  InoTop hybrid chuck jaw
Page 72	Page 92	Page 122	Page 134

Standard chucks in overview

	B-Top	B-Top3	Eccentric chuck	Machine specific chucks
				
Description	3-jaw chuck	3-jaw chuck with CENTREX interface	Eccentric chuck adjustable via c-axis	Chuck especially for your machine
Sizes	165, 215, 260, 315	215	65	SE 52, 65, 100 / RD 32, 42, 52, 65, 80, 100
Clamping range of all sizes [mm]	12 – 300	12 – 300	3 – 65	3 – 100
			RD [round]	SE [hexagonal] / RD [round]
Advantages	■ Fast jaw change with individual unlocking ■ Large through-bore with bushing inserts that can be changed from the front ■ Proven wedge rod mechanism	■ Jaw chuck with quick conversion to a segmented clamping bushing [I.D. clamping] and a clamping head [O.D. clamping] ■ Fast jaw change with individual unlocking ■ Large through-bore with bushing inserts that can be changed from the front ■ Proven wedge rod mechanism	■ Infinite eccentric adjustment via the c-axis ■ Concentric and eccentric machining in a single clamping set-up ■ Different eccentric dimensions are possible with the same chuck and clamping head	
Clamping elements	 Jaws	 Jaws	 Clamping head RD	 Clamping head SE  Clamping head RD
Adaptations		 MANDO Adapt [Mandrel-in-jaw-chuck]  SPANNTOP Adapt [End-stop-chuck-in-jaw-chuck]  SPANNTOP Adapt M [Through-bore-chuck-in-jaw-chuck]		
	Page 144	Page 148	Page 158	Page 162

TOPlus mini

HAINBUCH SYSTEM



The »mini« series really shines with a mass reduced by as much as 30 %, and a chuck diameter that is reduced by 1/3. This means reduced energy consumption and better tool accessibility. Naturally, adaptation devices can also be used with the TOPlus mini chuck. To maintain the minimal interference contour, the TOPlus mini chuck has its own adaptation devices with a smaller bolt hole circle.

Thanks to the reduced interference contour, it is easier to choose the tool that you need. Now it can also be shorter and more stable – on the main and sub spindles. Particularly in the case of limited installation space and in series operation, the TOPlus mini chuck is ideal: Lower energy consumption, dynamic spindle acceleration, and shorter cycle times reduce the costs per workpiece.

Minimalism that pays off!

Key advantages

- Adaptation devices possible [HAINBUCH SYSTEM]
- 25 % higher holding power than SPANNTOP
- Significantly reduced interference contour
- Improved tool accessibility
- Ideal for limited installation space
- Lower mass
- Minimal inertia loss compared to 3-jaw chucks



TOPlus mini pull-back in use

TOPlus mini chuck types

	TOPlus mini pull-back	TOPlus mini deadlength
		
Description	Workpiece clamping with pull-back effect. Chuck with dismountable end-stop plate.	Workpiece clamping without pull-back effect. Chuck with dismountable end-stop plate.
Advantages	■ Workpiece stabilization through axial draw force applied against the workpiece end-stop ■ Prepared for inside and front end-stop ■ Converts to a fully functional »bar chuck« when the end-stop plate is removed	■ Workpiece clamping without axial movement of the clamping head ■ Clamps workpieces with a short collar or shoulder ■ Suitable for pick-off without pull-back effect ■ Prepared for inside and front end-stop ■ Converts to a fully functional »bar chuck« when the end-stop plate is removed
Clamping elements	 Clamping head SE	 Clamping head SE
Adaptations	 MANDO Adapt T211 SE [Mandrel-in-clamping-device, with draw bolt]  MANDO Adapt T212 SE [Mandrel-in-clamping-device, without draw bolt]  Jaw module SE [Adaptation for jaw clamping]  Face driver SE / Morse taper adapter SE [Adaptation for clamping between centers]  Magnet module SE [Adaptation for magnetic clamping]	

TOPlus mini pull-back in detail

Designation	
1 Vulcanized clamping head with pull-back and hexagonal geometry for optimum chuck sealing and improved clamping force 2 Spindle flange 3 Chuck through-bore for bar work after disassembling the base end-stop 4 Fixed base end-stop for clamping with pull-back effect, central mounting thread for workpiece specific end-stop 5 Mounting thread for drawtube connection 6 Clamping screw for base end-stop, easy mounting through external actuation 7 Grease nipple, optimal holding power due to efficient lubrication	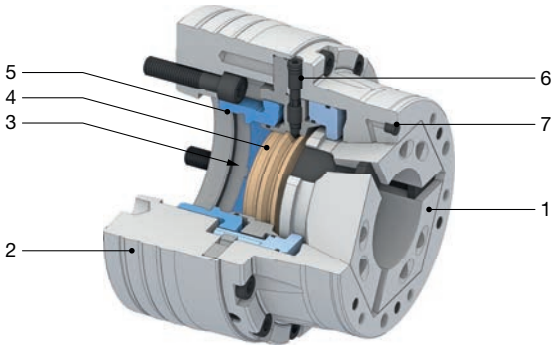

TOPlus mini deadlength in detail

Designation	
1 Grease nipple, optimal holding power due to efficient lubrication 2 Vulcanized standing clamping head with hexagonal geometry for improved chuck seal and greater clamping force 3 Spindle flange 4 Chuck through-bore for bar work after disassembling the base end-stop 5 Fixed base end-stop with central mounting thread for workpiece specific end-stop 6 Mounting thread for drawtube connection 7 Clamping screw for base end-stop, easy mounting through external actuation	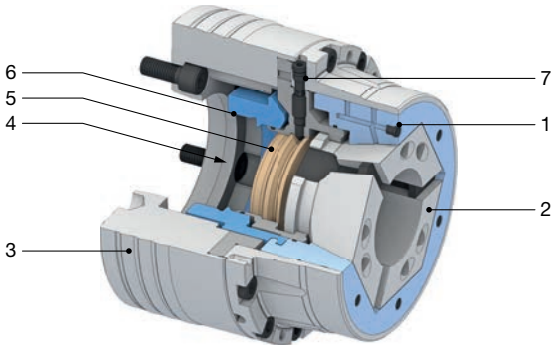

Order overview. TOPlus mini chuck

						Clamping elements and adaptations					
											
Size	Variant	Spindle nose	Total length [mm]	Material no.	In stock	Clamping head SE	MANDO Adapt T211 SE for TOPlus mini / premium	MANDO Adapt T212 SE for TOPlus mini / premium	Jaw module SE	Face driver / morse taper adapter SE for TOPlus mini / premium	Magnet module SE
						Page 422	Page 274	Page 280	Page 316	Page 324	Page 332
26	Pull-back	A2-4	102	10000752	✔	✔					
		A2-5		10000753	✔						
			125	10000754	✔						
	Deadlength	A2-4	99	10000797	✔	✔					
			110	10000798	✔						
		A2-5	101	10000799	✔						
			110	10000800	✔						
			130	10000801	✔						
40	Pull-back	A2-4	125	10000755	✔	✔					
		A2-5	117	10000756	✔						
			125	10000757	✔						
			143	10000758	✔						
		A2-6	124	10000759	✔						
			142	10000760	✔						
		AP120	106	10000761	✔						
			118	10000762	✔						
		AP140	106	10000786	✔						
	Deadlength	A2-4	123	10000802	✔	✔					
		A2-5	115	10000803	✔						
			123	10000804	✔						
			140	10000805	✔						
		A2-6	122	10000806	✔						
			139	10000807	✔						
52	Pull-back	A2-5	122	10000764	✔	✔	✔	✔		✔	✔
			145	10000765	✔						
		A2-6	122	10000766	✔						
			145	10000767	✔						
		A2-8	120	10000784	✔						
			145	10000785	✔						
		AP110	120	10000782	✔						
		AP120	105	10000768	✔						
			115	10000769	✔						
		AP140	105	10000770	✔						
			115	10000771	✔						

Detailed technical data follows.
TOPlus mini and TOPlus premium chucks require adaptations [MANDO Adapt, face driver and morse taper adapter] of the mini series.
Machine spindle standard DIN ISO 702-1. For spindle connection data please visit www.hainbuch.com.

Order overview. TOPlus mini chuck

						Clamping elements and adaptations					
											
Size	Variant	Spindle nose	Total length [mm]	Material no.	In stock	Clamping head SE	MANDO Adapt T211 SE for TOPlus mini / premium	MANDO Adapt T212 SE for TOPlus mini / premium	Jaw module SE	Face driver / morse taper adapter SE for TOPlus mini / premium	Magnet module SE
						Page 422	Page 274	Page 280	Page 316	Page 324	Page 332
52	Deadlength	A2-5	122	10000811	✔	✔					
		A2-5	147	10000812	✔						
		A2-6	122	10000813	✔						
			147	10000814	✔						
		A2-8	120	10000834	✔						
		AP110	100	10000831	✔						
			115	10000833	✔						
		AP120	105	10000815	✔						
			115	10000816	✔						
		AP140	107	10000817	✔						
65	Pull-back	A2-5	124	10000787	✔	✔	✔	✔	✔	✔	✔
			130	10000740	✔						
			150	10000741	✔						
		A2-6	126	10000742	✔						
			130	10000743	✔						
			155	10000744	✔						
		A2-8	130	10000745	✔						
			155	10000746	✔						
		AP120	111	10000749	✔						
			120	10000750	✔						
		AP140	111	10000747	✔						
			120	10000748	✔						
		AP170	115	10000751	✔						
	Deadlength	A2-5	128	10000788	✔	✔					
			138	10000789	✔						
		A2-6	124	10000790	✔						
			138	10000791	✔						
			163	10000792	✔						
		A2-8	133	10000793	✔						
			163	10000794	✔						
		AP120	129	10000840	✔						
		AP140	138	10000795	✔						
		AP170	110	10000836	✔						
			128	10000796	✔						
80	Pull-back	A2-5	132	10017026	✔	✔	✔	✔			
		A2-6	128	10017030	✔						

Detailed technical data follows.
TOPlus mini and TOPlus premium chucks require adaptations [MANDO Adapt, face driver and morse taper adapter] of the mini series.
Machine spindle standard DIN ISO 702-1. For spindle connection data please visit www.hainbuch.com.

Order overview. TOPlus mini chuck

						Clamping elements and adaptations					
											
Size	Variant	Spindle nose	Total length [mm]	Material no.	In stock	Clamping head SE	MANDO Adapt T211 SE for TOPlus mini / premium	MANDO Adapt T212 SE for TOPlus mini / premium	Jaw module SE	Face driver / morse taper adapter SE for TOPlus mini / premium	Magnet module SE
						Page 422	Page 274	Page 280	Page 316	Page 324	Page 332
80	Pull-back	A2-6	135	10017031	✔	✔	✔	✔			
			155	10017032	✔						
		A2-8	132	10017034	✔						
			150	10017038	✔						
			180	10017039	✔						
		AP140	132	10017040	✔						
		AP170	115	10017041	✔						
		AP220		10018166	✔						
	Deadlength	A2-5	136	10017043	✔	✔					
		A2-6	130	10017044	✔						
			137	10017045	✔						
			157	10017046	✔						
		A2-8	132	10017048	✔						
			152	10017049	✔						
			182	10017050	✔						
		AP140	134	10017051	✔						
		AP170	115	10017053	✔						
100	Pull-back	A2-5	160	10000772	✔	✔	✔	✔	✔	✔	✔
		A2-6	164	10000773	✔						
			170	10000774	✔						
		A2-8	162	10000775	✔						
			180	10000776	✔						
		A2-11		10000777	✔						
			195	10000778	✔						
		AP170	164	10000779	✔						
		AP220	150	10000780	✔						
	Deadlength	A2-5	171	10000818	✔	✔					
		A2-6	175	10000819	✔						
			182	10000820	✔						
		A2-8	169	10000821	✔						
			192	10000822	✔						
		A2-11	185	10000823	✔						
			200	10000824	✔						
		AP140	171	10000828	✔						
		AP170	175	10000825	✔						

Detailed technical data follows.
TOPlus mini and TOPlus premium chucks require adaptations [MANDO Adapt, face driver and morse taper adapter] of the mini series.
Machine spindle standard DIN ISO 702-1.
For spindle connection data please visit www.hainbuch.com.

Scope of delivery

- Chuck
- Base end-stop
- Socket wrench insert 1/2"

TOPlus mini pull-back size 26. Technical data

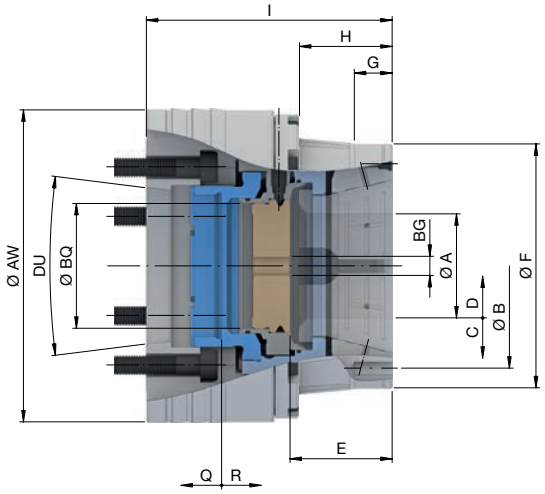

Size		26
Variant		**Pull-back**
Run-out ≤ [mm]		0,010
Max. radial clamping force [kN]		35
Max. axial drawtube force [pull / push] [kN]		16
RPM n max. [1/min.]		10000
Clamping range [mm]	A	3 – 26
Release stroke in Ø [mm]	C	0,6
Reserve stroke in Ø [mm]	D	0,6
Range / recommended workpiece tolerance [mm]		± 0,3
End-stop depth [mm]	E	33,8
Ø Capacity [mm]	BQ	37
End-stop thread size [M]	BG	8
Location front end-stop	F	Ø 67 f7
Centering length [mm]	G	15
Bolt hole circle end-stop	B	LK Ø 58 [3 x M6]
Length [mm]	H	43
Reserve stroke axial [mm]	Q	1
Release stroke axial [mm]	R	2

Spindle nose	DU	**A2-4**	**A2-5**	
Total length [mm]	I	**102**		**125**
Outer Ø [mm]	AW	114	128	
Weight [kg]		4,8	5,3	6,3
In stock		✔	✔	✔
Material no.		10000752	10000753	10000754


Clamping heads
Page 422


Alignment set
Page 540


Accessory overview
Page 478

TOPlus mini deadlength size 26. Technical data

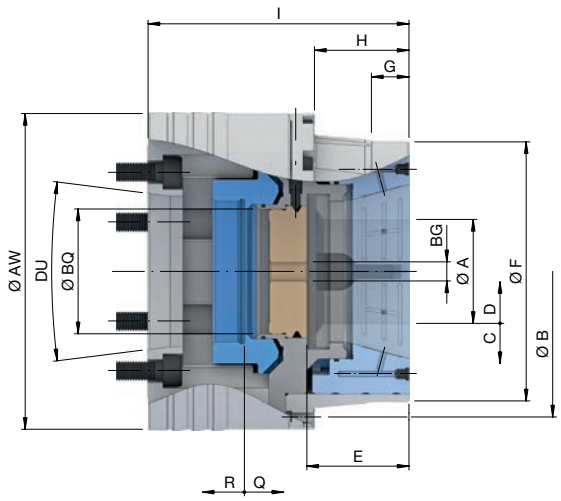

Size		26
Variant		**Deadlength**
Run-out ≤ [mm]		0,020
Max. radial clamping force [kN]		35
Max. axial compression force [kN]		16
RPM n max. [1/min.]		10000
Clamping range [mm]	A	3 – 26
Release stroke in Ø [mm]	C	0,6
Reserve stroke in Ø [mm]	D	0,6
Range / recommended workpiece tolerance [mm]		± 0,3
End-stop depth [mm]	E	34,5
Ø Capacity [mm]	BQ	27
End-stop thread size [M]	BG	8
Location front end-stop	F	Ø 74 f7
Centering length [mm]	G	20
Bolt hole circle end-stop	B	LK Ø 88 [3 x M4]
Length [mm]	H	33
Reserve stroke axial [mm]	Q	1
Release stroke axial [mm]	R	2

Spindle nose	DU	A2-4		A2-5		
Total length [mm]	I	**99**	**110**	**101**	**110**	**130**
Outer Ø [mm]	AW	114		128		
Weight [kg]		4,8	5,3	5,4	5,9	6,8
In stock		✔	✔	✔	✔	✔
Material no.		10000797	10000798	10000799	10000800	10000801


Clamping heads
Page 422


Alignment set
Page 540


Accessory overview
Page 478

TOPlus mini pull-back size 40. Technical data

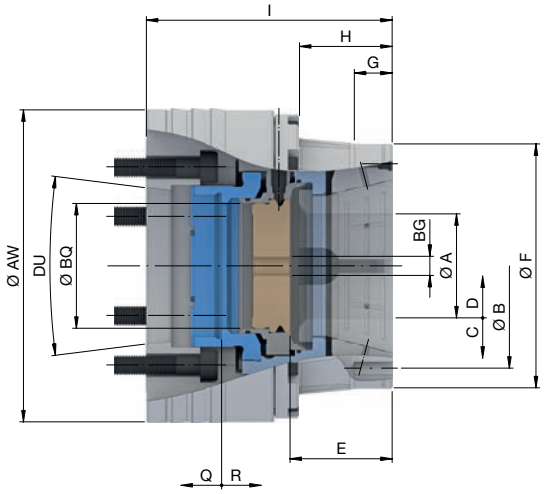

Size		40
Variant		**Pull-back**
Run-out ≤ [mm]		0,010
Max. radial clamping force [kN]		103
Max. axial drawtube force [pull / push] [kN]		33
RPM n max. [1/min.]		7000
Clamping range [mm]	A	3 – 40
Release stroke in Ø [mm]	C	0,5
Reserve stroke in Ø [mm]	D	0,8
Range / recommended workpiece tolerance [mm]		± 0,5
End-stop depth [mm]	E	47
Ø Capacity [mm]	BQ	44
End-stop thread size [M]	BG	10
Location front end-stop	F	Ø 91 f7
Centering length [mm]	G	20
Bolt hole circle end-stop	B	LK Ø 105 [3 x M6]
Length [mm]	H	47
Reserve stroke axial [mm]	Q	2
Release stroke axial [mm]	R	2

Spindle nose	DU	A2-4	A2-5			A2-6	
Total length [mm]	I	125	117	125	143	124	142
Outer Ø [mm]	AW	132				163	
Weight [kg]		7,7	6,9	7,3	8,2	9,7	11,1
In stock		✔	✔	✔	✔	✔	✔
Material no.		10000755	10000756	10000757	10000758	10000759	10000760

Spindle nose	DU	AP120		AP140
Total length [mm]	I	106	118	106
Outer Ø [mm]	AW	132		150
Weight [kg]		6,4	7	7,9
In stock		✔	✔	✔
Material no.		10000761	10000762	10000786


Clamping heads
Page 422


Alignment set
Page 540


Accessory overview
Page 478

TOPlus mini deadlength size 40. Technical data

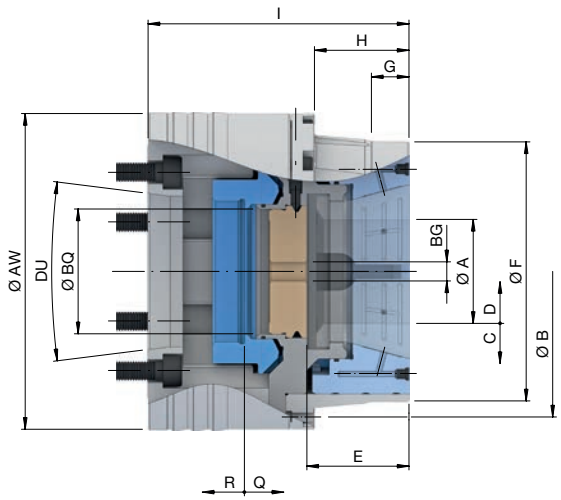

Size		40
Variant		**Deadlength**
Run-out ≤ [mm]		0,020
Max. radial clamping force [kN]		103
Max. axial compression force [kN]		33
RPM n max. [1/min.]		7000
Clamping range [mm]	A	3 – 40
Release stroke in Ø [mm]	C	0,5
Reserve stroke in Ø [mm]	D	0,8
Range / recommended workpiece tolerance [mm]		± 0,5
End-stop depth [mm]	E	47,7
Ø Capacity [mm]	BQ	44
End-stop thread size [M]	BG	10
Location front end-stop	F	Ø 99 f7
Centering length [mm]	G	20
Bolt hole circle end-stop	B	LK Ø 115 [3 x M4]
Length [mm]	H	47
Reserve stroke axial [mm]	Q	2
Release stroke axial [mm]	R	2

Spindle nose	DU	A2-4	A2-5			A2-6	
Total length [mm]	l	**123**	**115**	**123**	**140**	**122**	**139**
Outer Ø [mm]	AW	134				160	
Weight [kg]		8,2	7,5	8	8,9	10	11,3
In stock		✔	✔	✔	✔	✔	✔
Material no.		10000802	10000803	10000804	10000805	10000806	10000807


Clamping heads
Page 422


Alignment set
Page 540


Accessory overview
Page 478

TOPlus mini pull-back size 52. Technical data

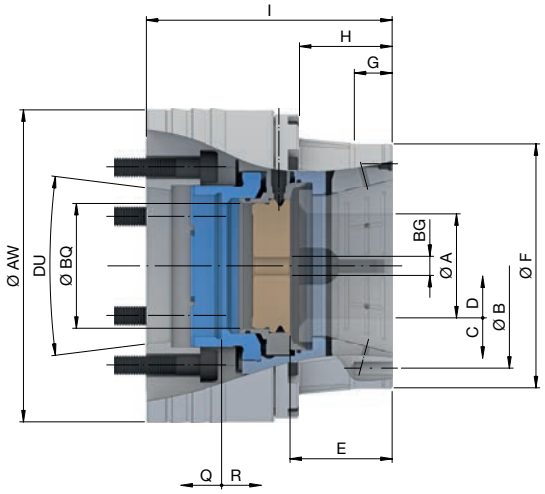

Size		52
Variant		**Pull-back**
Run-out ≤ [mm]		0,010
Max. radial clamping force [kN]		108
Max. axial drawtube force [pull / push] [kN]		40
RPM n max. [1/min.]		7000
Clamping range [mm]	A	3 – 52
Release stroke in Ø [mm]	C	0,6
Reserve stroke in Ø [mm]	D	1
Range / recommended workpiece tolerance [mm]		± 0,5
End-stop depth [mm]	E	46
Ø Capacity [mm]	BQ	53
End-stop thread size [M]	BG	10
Location front end-stop	F	Ø 119 f7
Centering length [mm]	G	15
Bolt hole circle end-stop	B	LK Ø 105 [3 x M8]
Length [mm]	H	42
Reserve stroke axial [mm]	Q	2
Release stroke axial [mm]	R	2,5

Spindle nose	DU	**A2-5**		**A2-6**		**A2-8**	
Total length [mm]	I	**122**	**145**	**122**	**145**	**120**	**145**
Outer Ø [mm]	AW	149		159		204	
Weight [kg]		10,5	12,4	10,7	12,4	15,7	18,6
In stock		✔	✔	✔	✔	✔	✔
Material no.		10000764	10000765	10000766	10000767	10000784	10000785

Spindle nose	DU	**AP110**	**AP120**		**AP140**	
Total length [mm]	I	**120**	**105**	**115**	**105**	**115**
Outer Ø [mm]	AW	149			150	
Weight [kg]		10,7	9,3	10,1	9,2	10,1
In stock		✔	✔	✔	✔	✔
Material no.		10000782	10000768	10000769	10000770	10000771


Clamping heads
Page 422


Adaptations I.D. clamping
Page 270


Face driver / morse taper
Page 324


Magnet module
Page 332


Alignment set
Page 540


Accessory overview
Page 478

TOPlus mini deadlength size 52. Technical data

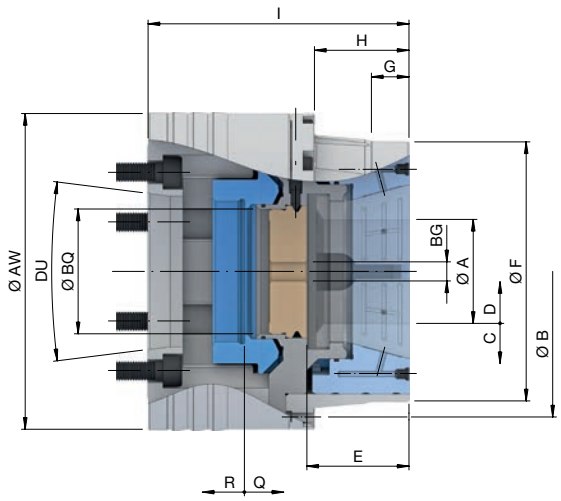

Size		52
Variant		**Deadlength**
Run-out ≤ [mm]		0,020
Max. radial clamping force [kN]		108
Max. axial compression force [kN]		40
RPM n max. [1/min.]		7000
Clamping range [mm]	A	3 – 52
Release stroke in Ø [mm]	C	0,6
Reserve stroke in Ø [mm]	D	1
Range / recommended workpiece tolerance [mm]		± 0,5
End-stop depth [mm]	E	45,8
Ø Capacity [mm]	BQ	53
End-stop thread size [M]	BG	10
Location front end-stop	F	Ø 119 f7
Centering length [mm]	G	15
Bolt hole circle end-stop	B	LK Ø 136 [3 x M6]
Length [mm]	H	44
Reserve stroke axial [mm]	Q	2
Release stroke axial [mm]	R	2,5

Spindle nose	DU	A2-5		A2-6		A2-8
Total length [mm]	I	**122**	**147**	**122**	**147**	**120**
Outer Ø [mm]	AW	149		163		202
Weight [kg]		10,5	12,4	11,5	13,5	15,4
In stock		✔	✔	✔	✔	✔
Material no.		10000811	10000812	10000813	10000814	10000834

Spindle nose	DU	AP110		AP120		AP140
Total length [mm]	I	**100**	**115**	**105**	**115**	**107**
Outer Ø [mm]	AW	149				
Weight [kg]		8,9	10,2	9,3	10	9,1
In stock		✔	✔	✔	✔	✔
Material no.		10000831	10000833	10000815	10000816	10000817


Clamping heads
Page 422


Alignment set
Page 540


Accessory overview
Page 478

TOPlus mini pull-back size 65. Technical data

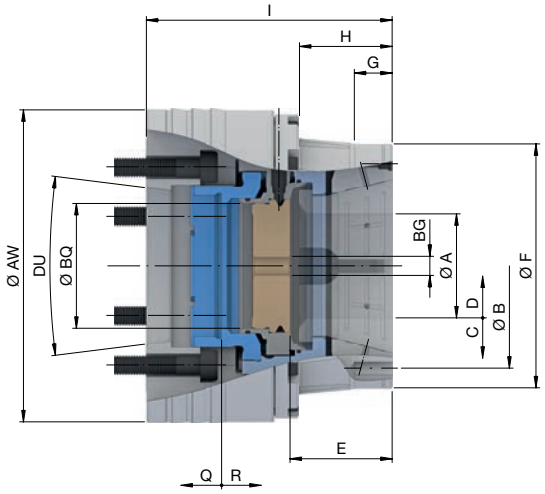

Size		65
Variant		**Pull-back**
Run-out ≤ [mm]		0,010
Max. radial clamping force [kN]		120
Max. axial drawtube force [pull / push] [kN]		45
RPM n max. [1/min.]		6000
Clamping range [mm]	A	3 – 65
Release stroke in Ø [mm]	C	0,6
Reserve stroke in Ø [mm]	D	1
Range / recommended workpiece tolerance [mm]		± 0,5
End-stop depth [mm]	E	54
Ø Capacity [mm]	BQ	66
End-stop thread size [M]	BG	12
Location front end-stop	F	Ø 129 f7
Centering length [mm]	G	20
Bolt hole circle end-stop	B	LK Ø 112 [3 x M8]
Length [mm]	H	49
Reserve stroke axial [mm]	Q	2
Release stroke axial [mm]	R	2,5

Spindle nose	DU	A2-5			A2-6			A2-8	
Total length [mm]	I	**124**	**130**	**150**	**126**	**130**	**155**	**130**	**155**
Outer Ø [mm]	AW	165						204	
Weight [kg]		12,4	13	15,2	11,4	11,7	13,5	15,9	19
In stock		✔	✔	✔	✔	✔	✔	✔	✔
Material no.		10000787	10000740	10000741	10000742	10000743	10000744	10000745	10000746

Spindle nose	DU	AP120		AP140		AP170
Total length [mm]	I	**111**	**120**	**111**	**120**	**115**
Outer Ø [mm]	AW	165				180
Weight [kg]		11,3	12,3	10,9	11,7	12,3
In stock		✔	✔	✔	✔	✔
Material no.		10000749	10000750	10000747	10000748	10000751


Clamping heads
Page 422


Adaptations I.D. clamping
Page 270


Adaptations jaw clamping
Page 316


Face driver / morse taper
Page 324


Magnet module
Page 332


Alignment set
Page 540


Accessory overview
Page 478

TOPlus mini deadlength size 65. Technical data

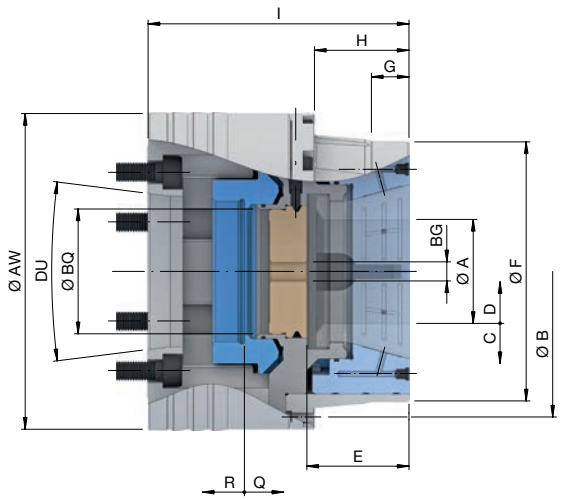

Size		65
Variant		**Deadlength**
Run-out ≤ [mm]		0,020
Max. radial clamping force [kN]		120
Max. axial compression force [kN]		45
RPM n max. [1/min.]		6000
Clamping range [mm]	A	3 – 65
Release stroke in Ø [mm]	C	0,6
Reserve stroke in Ø [mm]	D	1
Range / recommended workpiece tolerance [mm]		± 0,5
End-stop depth [mm]	E	54
Ø Capacity [mm]	BQ	66
End-stop thread size [M]	BG	12
Location front end-stop	F	Ø 137 f7
Centering length [mm]	G	20
Bolt hole circle end-stop	B	LK Ø 154 [3 x M6]
Length [mm]	H	50
Reserve stroke axial [mm]	Q	2
Release stroke axial [mm]	R	2,5

Spindle nose	DU	A2-5		A2-6			A2-8	
Total length [mm]	I	**128**	**138**	**124**	**138**	**163**	**133**	**163**
Outer Ø [mm]	AW	167		165			202	
Weight [kg]		13,7	14,7	12,6	13,9	16,2	17,2	20,5
In stock		✔	✔	✔	✔	✔	✔	✔
Material no.		10000788	10000789	10000790	10000791	10000792	10000793	10000794

Spindle nose	DU	AP120	AP140	AP170	
Total length [mm]	I	**129**	**138**	**110**	**128**
Outer Ø [mm]	AW	167		180	
Weight [kg]		14	14,6	12,8	14,9
In stock		✔	✔	✔	✔
Material no.		10000840	10000795	10000836	10000796



Clamping heads
Page 422



Alignment set
Page 540



Accessory overview
Page 478

TOPlus mini pull-back size 80. Technical data

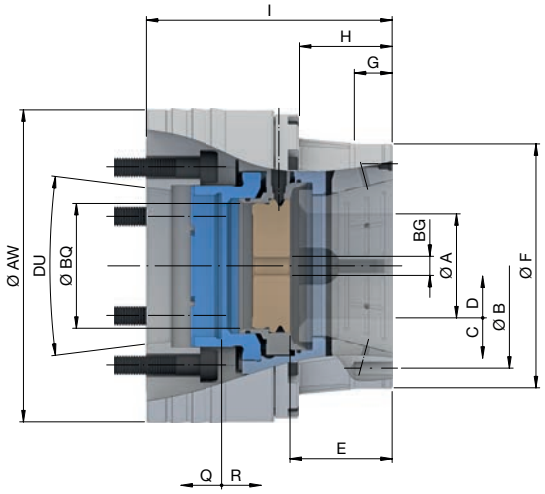

Size		80
Variant		**Pull-back**
Run-out ≤ [mm]		0,010
Max. radial clamping force [kN]		132
Max. axial drawtube force [pull / push] [kN]		50
RPM n max. [1/min.]		5500
Clamping range [mm]	A	4 – 80
Release stroke in Ø [mm]	C	0,6
Reserve stroke in Ø [mm]	D	1
Range / recommended workpiece tolerance [mm]		± 0,5
End-stop depth [mm]	E	54
Ø Capacity [mm]	BQ	82
End-stop thread size [M]	BG	12
Location front end-stop	F	Ø 150 f7
Centering length [mm]	G	20
Bolt hole circle end-stop	B	LK Ø 130 [3 x M8]
Length [mm]	H	49
Reserve stroke axial [mm]	Q	2
Release stroke axial [mm]	R	2,5

Spindle nose	DU	A2-5	A2-6			A2-8		
Total length [mm]	I	**132**	**128**	**135**	**155**	**132**	**150**	**180**
Outer Ø [mm]	AW	176				204		
Weight [kg]		15,2	13,9	14,6	16,6	17	19,1	22,6
In stock		✔	✔	✔	✔	✔	✔	✔
Material no.		10017026	10017030	10017031	10017032	10017034	10017038	10017039

Spindle nose	DU	AP140	AP170	AP220
Total length [mm]	I	**132**	**115**	
Outer Ø [mm]	AW	176	180	230
Weight [kg]		15,3	13	18,7
In stock		✔	✔	✔
Material no.		10017040	10017041	10018166


Clamping heads
Page 422


Adaptations I.D. clamping
Page 270


Alignment set
Page 540


Accessory overview
Page 478

TOPlus mini deadlength size 80. Technical data

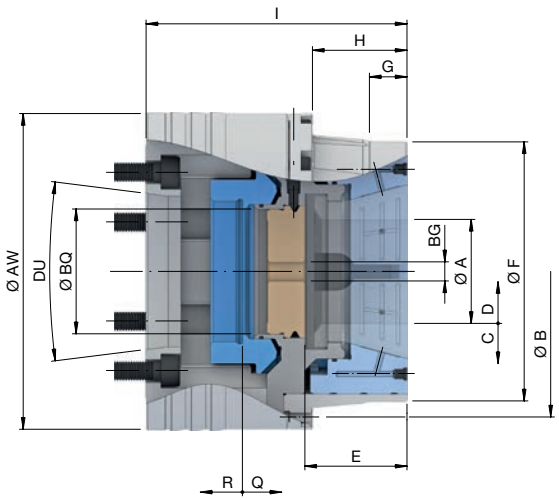

Size		80
Variant		**Deadlength**
Run-out ≤ [mm]		0,020
Max. radial clamping force [kN]		132
Max. axial compression force [kN]		50
RPM n max. [1/min.]		5500
Clamping range [mm]	A	4 – 80
Release stroke in Ø [mm]	C	0,6
Reserve stroke in Ø [mm]	D	1
Range / recommended workpiece tolerance [mm]		± 0,5
End-stop depth [mm]	E	55
Ø Capacity [mm]	BQ	82
End-stop thread size [M]	BG	12
Location front end-stop	F	Ø 160 f7
Centering length [mm]	G	25
Bolt hole circle end-stop	B	LK Ø 175 [9 x M6]
Length [mm]	H	51
Reserve stroke axial [mm]	Q	2
Release stroke axial [mm]	R	2,5

Spindle nose	DU	A2-5	A2-6			A2-8		
Total length [mm]	I	**136**	**130**	**137**	**157**	**132**	**152**	**182**
Outer Ø [mm]	AW	194	193			205		
Weight [kg]		20	18,2	19,1	21,8	19,3	21,6	24,7
In stock		✔	✔	✔	✔	✔	✔	✔
Material no.		10017043	10017044	10017045	10017046	10017048	10017049	10017050

Spindle nose	DU	AP140	AP170
Total length [mm]	I	**134**	**115**
Outer Ø [mm]	AW	193	
Weight [kg]		20	16,2
In stock		✔	✔
Material no.		10017051	10017053


Clamping heads
Page 422


Alignment set
Page 540


Accessory overview
Page 478

TOPlus mini pull-back size 100. Technical data

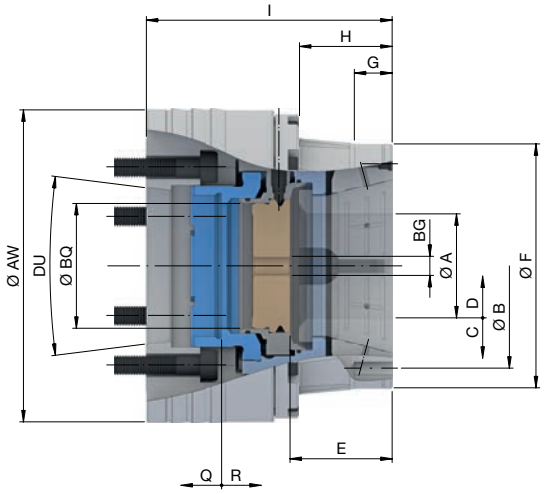

Size		100
Variant		**Pull-back**
Run-out ≤ [mm]		0,015
Max. radial clamping force [kN]		172
Max. axial drawtube force [pull / push] [kN]		65
RPM n max. [1/min.]		4650
Clamping range [mm]	A	15 – 100
Release stroke in Ø [mm]	C	1,6
Reserve stroke in Ø [mm]	D	1,5
Range / recommended workpiece tolerance [mm]		± 1,0
End-stop depth [mm]	E	72
Ø Capacity [mm]	BQ	102
End-stop thread size [M]	BG	12
Location front end-stop	F	Ø 183 f7
Centering length [mm]	G	20
Bolt hole circle end-stop	B	LK Ø 160 [3 x M8]
Length [mm]	H	64
Reserve stroke axial [mm]	Q	3
Release stroke axial [mm]	R	5

Spindle nose	DU	A2-5	A2-6		A2-8		A2-11	
Total length [mm]	I	160	164	170	162	180		195
Outer Ø [mm]	AW	221					281	
Weight [kg]		27,4	27,9	28,8	25,7	27,9	43,3	47,5
In stock		✔	✔	✔	✔	✔	✔	✔
Material no.		10000772	10000773	10000774	10000775	10000776	10000777	10000778

Spindle nose	DU	AP170	AP220
Total length [mm]	I	164	150
Outer Ø [mm]	AW	221	230
Weight [kg]		28,2	26,3
In stock		✔	✔
Material no.		10000779	10000780


Clamping heads
Page 422

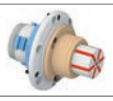
Adaptations I.D. clamping
Page 270


Adaptations jaw clamping
Page 316


Face driver / morse taper
Page 324


Magnet module
Page 332


Clamping head adapter
Page 513


Alignment set
Page 540


Accessory overview
Page 478

TOPlus mini deadlength size 100. Technical data

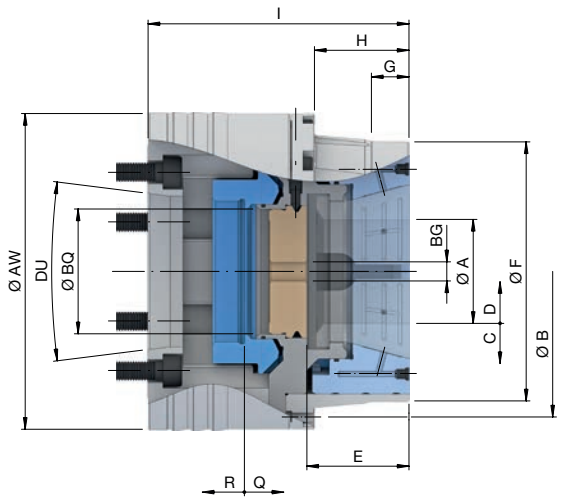

Size		100
Variant		**Deadlength**
Run-out ≤ [mm]		0,025
Max. radial clamping force [kN]		172
Max. axial compression force [kN]		65
RPM n max. [1/min.]		4650
Clamping range [mm]	A	15 – 100
Release stroke in Ø [mm]	C	1,6
Reserve stroke in Ø [mm]	D	1,5
Range / recommended workpiece tolerance [mm]		± 1,0
End-stop depth [mm]	E	74
Ø Capacity [mm]	BQ	102
End-stop thread size [M]	BG	12
Location front end-stop	F	Ø 191 f7
Centering length [mm]	G	30
Bolt hole circle end-stop	B	LK Ø 208 [3 x M6]
Length [mm]	H	64
Reserve stroke axial [mm]	Q	3
Release stroke axial [mm]	R	5

Spindle nose	DU	A2-5	A2-6		A2-8		A2-11	
Total length [mm]	I	171	175	182	169	192	185	200
Outer Ø [mm]	AW	221					276	
Weight [kg]		31,5	31,9	33	29,2	32,6	42,5	45,5
In stock		✔	✔	✔	✔	✔	✔	✔
Material no.		10000818	10000819	10000820	10000821	10000822	10000823	10000824

Spindle nose	DU	AP140	AP170	AP220
Total length [mm]	I	171	175	162
Outer Ø [mm]	AW	221		230
Weight [kg]		32,5	32,3	29,9
In stock		✔	✔	✔
Material no.		10000828	10000825	10000826


Clamping heads
Page 422


Clamping head adapter
Page 513


Alignment set
Page 540


Accessory overview
Page 478

TOPlus mini chuck

TOPlus premium

Maximum precision in a mini format



TOPlus premium chuck



The TOPlus premium chuck is ideal for high-precision clamping of delicate and thin-walled parts, as well as solid and massive parts. In combination with premium clamping heads and when clamping against the end-stop, you benefit from incredible run-out accuracy of ≤ 5 µm.

That makes the standard TOPlus premium chuck a better and less expensive alternative to hydraulic and diaphragm clamping devices. In addition to high precision, the large opening stroke also facilitates automated loading of the machine – even if the robot is somewhat inaccurate. By the way, slight contact with the workpiece during loading has no negative effect on the TOPlus premium. Despite its high precision it remains »robust« and your process remains stable.

For machining in which »standard« accuracy is sufficient, you can simply use conventional standard clamping heads. As with the conventional TOPlus mini, the run-out accuracy when clamping against the workpiece end-stop is then 10 µm. Of course, all compatible HAINBUCH adaptations can also be used. Change-over from O.D. to I.D. clamping or jaw clamping in less than two minutes is therefore assured.

The most accurate of all HAINBUCH chucks!

Key advantages

- Run-out accuracy ≤ 5 µm with premium clamping heads, otherwise ≤ 10 µm [requires clamping against the workpiece end-stop]
- For precise and powerful clamping
- Changeable to I.D., or jaw clamping [HAINBUCH SYSTEM]
- Less expensive than hydro-expansion and diaphragm clamping devices



TOPlus premium pull-back in detail

Designation	
1 Standard or premium clamping head with pull-back and hexagonal geometry for optimum chuck sealing and improved clamping force 2 Spindle flange 3 Chuck through-bore for bar work after disassembling the base end-stop 4 Fixed base end-stop for clamping with pull-back effect, central mounting thread for workpiece specific end-stop 5 Mounting thread for drawtube connection 6 Clamping screw for base end-stop, easy mounting through external actuation 7 Grease nipple, optimal holding power due to efficient lubrication	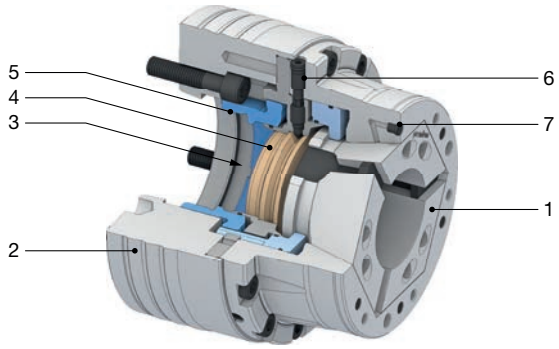

Max. run-out accuracy of chuck

	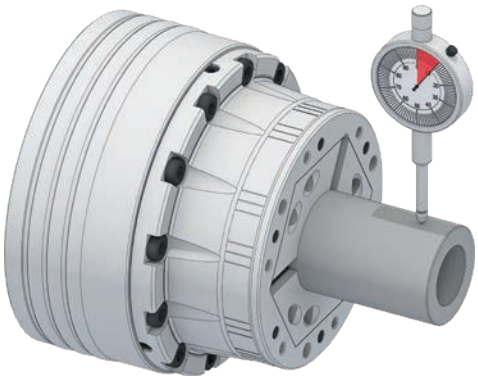	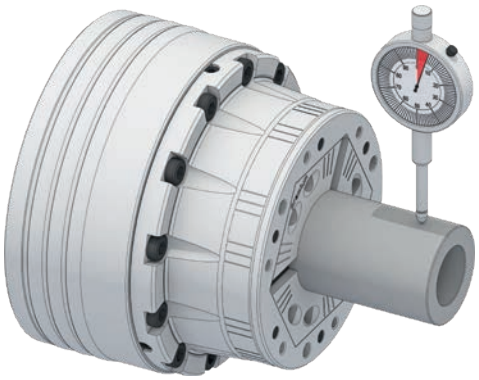
Variant	**premium chuck with standard clamping head**	**premium chuck with premium clamping head**
Run-out	≤ 10 µm	≤ 5 µm
Description	Measured on a ground test shaft according to HAINBUCH standard [Alignment set], clamped against a workpiece end-stop	
Clamping head	■ Standard sizes are in stock ■ Inexpensive clamping head ■ Round, other profile clamping also available [standard clamping range]	■ Custom clamping diameter ■ High-precision run-out ■ Round clamping possible [clamping range starting at 10 mm]

Order overview. TOPlus premium chuck

Size	Variant	Spindle nose	Total length [mm]	Material no.	In stock	Clamping elements and adaptations: Clamping head SE Page 422	MANDO Adapt T211 SE for TOPlus mini / premium Page 274	MANDO Adapt T212 SE for TOPlus mini / premium Page 280	Jaw module SE Page 316	Face driver / morse taper adapter SE for TOPlus mini / premium Page 324	Magnet module SE Page 332
26	Pull-back	A2-4	102	10017416	✔	✔					
		A2-5		10017418	✔						
			125	10017419	✔						
40	Pull-back	A2-4	125	10017420	✔	✔					
		A2-5	117	10017421	✔						
			125	10017422	✔						
			143	10017423	✔						
		A2-6	124	10017424	✔						
			142	10017425	✔						
		AP120	106	10017426	✔						
			118	10017427	✔						
		AP140	106	10017428	✔						
52	Pull-back	A2-5	122	10017430	✔	✔	✔	✔		✔	✔
			145	10017432	✔						
		A2-6	122	10017433	✔						
			145	10017434	✔						
		A2-8	120	10017435	✔						
			145	10017436	✔						
		AP110	120	10017437	✔						
		AP120	105	10017438	✔						
			115	10017439	✔						
		AP140	105	10017440	✔						
			115	10017441	✔						
65	Pull-back	A2-5	124	10017442	✔	✔	✔	✔	✔	✔	✔
			130	10017443	✔						
			150	10017444	✔						
		A2-6	126	10017445	✔						
			130	10017446	✔						
			155	10017447	✔						
		A2-8	130	10017448	✔						
			155	10017450	✔						
		AP120	111	10017451	✔						
			120	10017452	✔						
		AP140	111	10017453	✔						
			120	10017454	✔						
		AP170	115	10017455	✔						

Order overview. TOPlus premium chuck

						Clamping elements and adaptations					
											
Size	Variant	Spindle nose	Total length [mm]	Material no.	In stock	Clamping head SE Page 422	MANDO Adapt T211 SE for TOPlus mini / premium Page 274	MANDO Adapt T212 SE for TOPlus mini / premium Page 280	Jaw module SE Page 316	Face driver / morse taper adapter SE for TOPlus mini / premium Page 324	Magnet module SE Page 332
80	Pull-back	A2-5	132	10017456	✔	✔	✔	✔			
		A2-6	128	10017457	✔						
			135	10017458	✔						
			155	10017459	✔						
		A2-8	132	10017460	✔						
			150	10017461	✔						
			180	10017462	✔						
		AP140	132	10017463	✔						
		AP170	115	10017464	✔						
		AP220		10018433	✔						
100	Pull-back	A2-5	160	10017465	✔	✔	✔	✔	✔	✔	✔
		A2-6	164	10017466	✔						
			170	10017467	✔						
		A2-8	162	10017468	✔						
			180	10017469	✔						
		A2-11		10017470	✔						
			195	10017471	✔						
		AP170	164	10017472	✔						
		AP220	150	10017473	✔						

The specified accuracy is achieved with the compatible premium clamping head when clamping against a workpiece end-stop.

TOPlus premium and TOPlus mini chucks require adaptations [MANDO Adapt, face driver and morse taper adapter] of the mini series.

Machine spindle standard DIN ISO 702-1.

For more connection data please visit www.hainbuch.com

Scope of delivery

- Chuck
- Base end-stop
- Socket wrench insert 1/2"

TOPlus premium pull-back size 26. Technical data

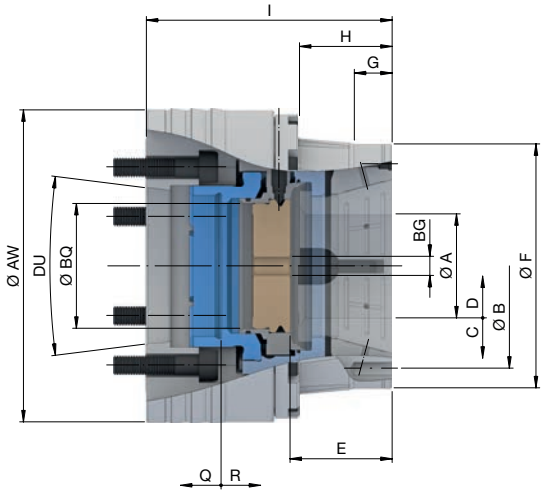

Size		26
Variant		**Pull-back**
Run-out with standard clamping head ≤ [mm]		0,010
Run-out with premium clamping head ≤ [mm]		0,005
Max. radial clamping force [kN]		35
Max. axial drawtube force [pull / push] [kN]		16
RPM n max. [1/min.]		10000
Clamping range with standard clamping head [mm]	A	3 – 26
Clamping range with premium clamping head [mm]	A	10 – 26
Release stroke in Ø [mm]	C	0,6
Reserve stroke in Ø [mm]	D	0,6
Range / recommended workpiece tolerance [mm]		± 0,3
End-stop depth [mm]	E	33,8
Ø Capacity [mm]	BQ	37
End-stop thread size [M]	BG	8
Location front end-stop	F	Ø 67 f7
Centering length [mm]	G	15
Bolt hole circle end-stop	B	LK Ø 58 [3 x M6]
Length [mm]	H	43
Reserve stroke axial [mm]	Q	1
Release stroke axial [mm]	R	2

Spindle nose	DU	**A2-4**	**A2-5**	
Total length [mm]	I	**102**		**125**
Outer Ø [mm]	AW	114	128	
Weight [kg]		4,9	6,3	6,9
In stock		✔	✔	✔
Material no.		10017416	10017418	10017419


Clamping heads
Page 422


Alignment set
Page 540


Accessory overview
Page 478

TOPlus premium pull-back size 40. Technical data

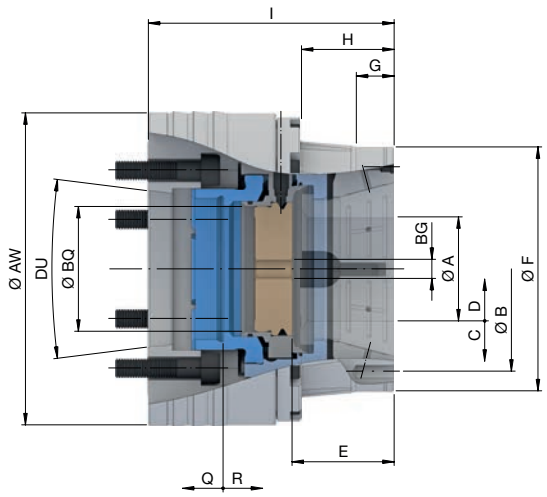

Size		40					
Variant		**Pull-back**					
Run-out with standard clamping head ≤ [mm]		0,010					
Run-out with premium clamping head ≤ [mm]		0,005					
Max. radial clamping force [kN]		103					
Max. axial drawtube force [pull / push] [kN]		33					
RPM n max. [1/min.]		7000					
Clamping range with standard clamping head [mm]	A	3 – 40					
Clamping range with premium clamping head [mm]	A	10 – 40					
Release stroke in Ø [mm]	C	0,5					
Reserve stroke in Ø [mm]	D	0,8					
Range / recommended workpiece tolerance [mm]		± 0,5					
End-stop depth [mm]	E	47					
Ø Capacity [mm]	BQ	44					
End-stop thread size [M]	BG	10					
Location front end-stop	F	Ø 91 f7					
Centering length [mm]	G	20					
Bolt hole circle end-stop	B	LK Ø 105 [3 x M6]					
Length [mm]	H	47					
Reserve stroke axial [mm]	Q	2					
Release stroke axial [mm]	R	2					
Spindle nose	DU	**A2-4**	**A2-5**			**A2-6**	
Total length [mm]	I	**125**	**117**	**125**	**143**	**124**	**142**
Outer Ø [mm]	AW	132				163	
Weight [kg]		7,7	7		7,5	9,5	10
In stock		✔	✔	✔	✔	✔	✔
Material no.		10017420	10017421	10017422	10017423	10017424	10017425
Spindle nose	DU	**AP120**				**AP140**	
Total length [mm]	I	**106**		**118**		**106**	
Outer Ø [mm]	AW	132				150	
Weight [kg]		6,5				8	
In stock		✔		✔		✔	
Material no.		10017426		10017427		10017428	



Clamping heads

Page 422



Alignment set

Page 540



Accessory overview

Page 478

TOPlus premium pull-back size 52. Technical data

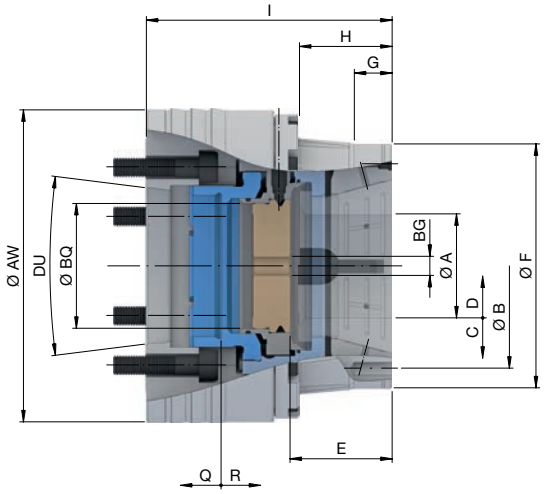

Size		52					
Variant		**Pull-back**					
Run-out with standard clamping head ≤ [mm]		0,010					
Run-out with premium clamping head ≤ [mm]		0,005					
Max. radial clamping force [kN]		108					
Max. axial drawtube force [pull / push] [kN]		40					
RPM n max. [1/min.]		7000					
Clamping range with standard clamping head [mm]	A	3 – 52					
Clamping range with premium clamping head [mm]	A	10 – 52					
Release stroke in Ø [mm]	C	0,6					
Reserve stroke in Ø [mm]	D	1					
Range / recommended workpiece tolerance [mm]		± 0,5					
End-stop depth [mm]	E	46					
Ø Capacity [mm]	BQ	53					
End-stop thread size [M]	BG	10					
Location front end-stop	F	Ø 119 f7					
Centering length [mm]	G	15					
Bolt hole circle end-stop	B	LK Ø 105 [3 x M8]					
Length [mm]	H	42					
Reserve stroke axial [mm]	Q	2					
Release stroke axial [mm]	R	2,5					
Spindle nose	DU	**A2-5**		**A2-6**		**A2-8**	
Total length [mm]	I	**122**	**145**	**122**	**145**	**120**	**145**
Outer Ø [mm]	AW	149		159		204	
Weight [kg]		10	10,5		11	15,7	16
In stock		✔	✔	✔	✔	✔	✔
Material no.		10017430	10017432	10017433	10017434	10017435	10017436
Spindle nose	DU	**AP110**	**AP120**			**AP140**	
Total length [mm]	I	**120**	**105**	**115**		**105**	**115**
Outer Ø [mm]	AW	149				150	
Weight [kg]		10,7	10			9,5	
In stock		✔	✔	✔		✔	✔
Material no.		10017437	10017438	10017439		10017440	10017441


Clamping heads
Page 422


Adaptations I.D. clamping
Page 270


Face driver / morse taper
Page 324


Magnet module
Page 332


Alignment set
Page 540


Accessory overview
Page 478

TOPlus premium pull-back size 65. Technical data

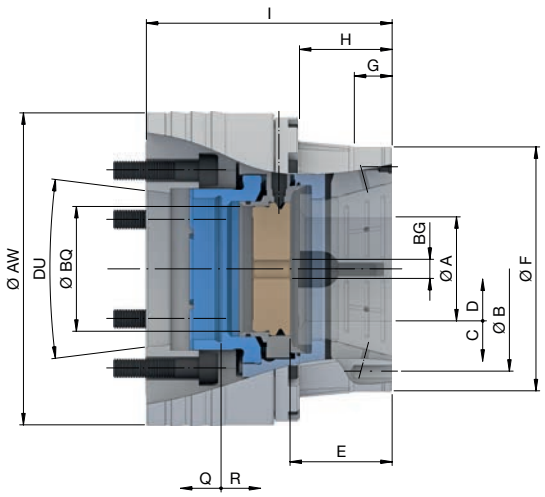

Size		65							
Variant		**Pull-back**							
Run-out with standard clamping head ≤ [mm]		0,010							
Run-out with premium clamping head ≤ [mm]		0,005							
Max. radial clamping force [kN]		120							
Max. axial drawtube force [pull / push] [kN]		45							
RPM n max. [1/min.]		6000							
Clamping range with standard clamping head [mm]	A	3 – 65							
Clamping range with premium clamping head [mm]	A	10 – 65							
Release stroke in Ø [mm]	C	0,6							
Reserve stroke in Ø [mm]	D	1							
Range / recommended workpiece tolerance [mm]		± 0,5							
End-stop depth [mm]	E	54							
Ø Capacity [mm]	BQ	66							
End-stop thread size [M]	BG	12							
Location front end-stop	F	Ø 129 f7							
Centering length [mm]	G	20							
Bolt hole circle end-stop	B	LK Ø 112 [3 x M8]							
Length [mm]	H	49							
Reserve stroke axial [mm]	Q	2							
Release stroke axial [mm]	R	2,5							
Spindle nose	DU	**A2-5**			**A2-6**			**A2-8**	
Total length [mm]	I	**124**	**130**	**150**	**126**	**130**	**155**	**130**	**155**
Outer Ø [mm]	AW	165						204	
Weight [kg]		11,5	13		11			16	
In stock		✔	✔	✔	✔	✔	✔	✔	✔
Material no.		10017442	10017443	10017444	10017445	10017446	10017447	10017448	10017450
Spindle nose	DU	**AP120**			**AP140**			**AP170**	
Total length [mm]	I	**111**		**120**	**111**		**120**	**115**	
Outer Ø [mm]	AW	165						180	
Weight [kg]		12,5			11,8			12,5	
In stock		✔		✔	✔		✔	✔	
Material no.		10017451		10017452	10017453		10017454	10017455	

 Clamping heads Page 422	 Adaptations I.D. clamping Page 270	 Adaptations jaw clamping Page 316	 Face driver / morse taper Page 324	 Magnet module Page 332	 Alignment set Page 540	 Accessory overview Page 478

TOPlus premium pull-back size 80. Technical data

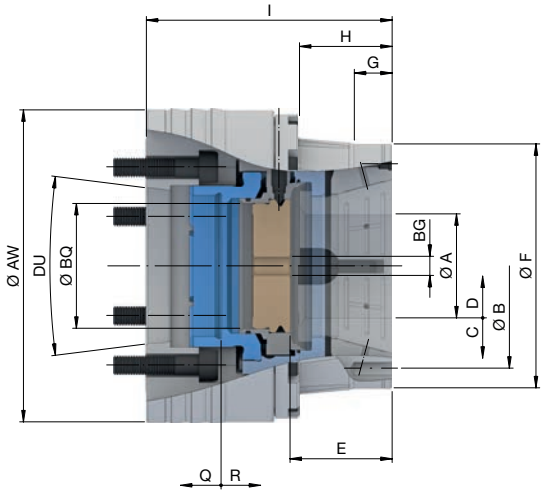

Size		**80**						
Variant		**Pull-back**						
Run-out with standard clamping head ≤ [mm]		0,010						
Run-out with premium clamping head ≤ [mm]		0,005						
Max. radial clamping force [kN]		132						
Max. axial drawtube force [pull / push] [kN]		50						
RPM n max. [1/min.]		5500						
Clamping range with standard clamping head [mm]	A	4 – 80						
Clamping range with premium clamping head [mm]	A	10 – 80						
Release stroke in Ø [mm]	C	0,6						
Reserve stroke in Ø [mm]	D	1						
Range / recommended workpiece tolerance [mm]		± 0,5						
End-stop depth [mm]	E	54						
Ø Capacity [mm]	BQ	82						
End-stop thread size [M]	BG	12						
Location front end-stop	F	Ø 150 f7						
Centering length [mm]	G	20						
Bolt hole circle end-stop	B	LK Ø 130 [3 x M8]						
Length [mm]	H	49						
Reserve stroke axial [mm]	Q	2						
Release stroke axial [mm]	R	2,5						
Spindle nose	DU	**A2-5**	**A2-6**			**A2-8**		
Total length [mm]	I	**132**	**128**	**135**	**155**	**132**	**150**	**180**
Outer Ø [mm]	AW	176				204		
Weight [kg]		15,2	14,8			19,3		
In stock		✔	✔	✔	✔	✔	✔	✔
Material no.		10017456	10017457	10017458	10017459	10017460	10017461	10017462
Spindle nose	DU	**AP140**		**AP170**		**AP220**		
Total length [mm]	I	**132**		**115**				
Outer Ø [mm]	AW	176		180		230		
Weight [kg]		15,4		13,2		18,9		
In stock		✔		✔		✔		
Material no.		10017463		10017464		10018433		


Clamping heads
Page 422


Adaptations I.D. clamping
Page 270


Alignment set
Page 540


Accessory overview
Page 478

TOPlus premium pull-back size 100. Technical data

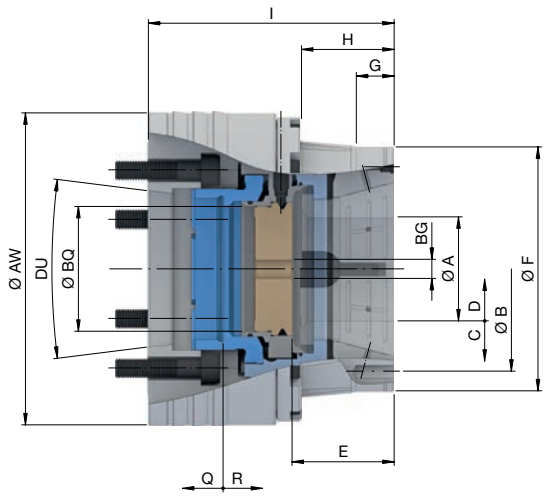

Size		**100**						
Variant		**Pull-back**						
Run-out with standard clamping head ≤ [mm]		0,010						
Run-out with premium clamping head ≤ [mm]		0,005						
Max. radial clamping force [kN]		172						
Max. axial drawtube force [pull / push] [kN]		65						
RPM n max. [1/min.]		4650						
Clamping range with standard clamping head [mm]	A	15 – 100						
Clamping range with premium clamping head [mm]	A	15 – 100						
Release stroke in Ø [mm]	C	1,6						
Reserve stroke in Ø [mm]	D	1,5						
Range / recommended workpiece tolerance [mm]		± 1,0						
End-stop depth [mm]	E	72						
Ø Capacity [mm]	BQ	102						
End-stop thread size [M]	BG	12						
Location front end-stop	F	Ø 183 f7						
Centering length [mm]	G	20						
Bolt hole circle end-stop	B	LK Ø 160 [3 x M8]						
Length [mm]	H	64						
Reserve stroke axial [mm]	Q	3						
Release stroke axial [mm]	R	5						
Spindle nose	DU	**A2-5**	**A2-6**		**A2-8**		**A2-11**	
Total length [mm]	I	**160**	**164**	**170**	**162**	**180**		**195**
Outer Ø [mm]	AW	221					281	
Weight [kg]		27	31		31,5		43	
In stock		✔	✔	✔	✔	✔	✔	✔
Material no.		10017465	10017466	10017467	10017468	10017469	10017470	10017471
Spindle nose	DU	**AP170**			**AP220**			
Total length [mm]	I	**164**			**150**			
Outer Ø [mm]	AW	221			230			
Weight [kg]		28			26			
In stock		✔			✔			
Material no.		10017472			10017473			

 Clamping heads Page 422	 Adaptations I.D. clamping Page 270	 Adaptations jaw clamping Page 316	 Face driver / morse taper Page 324	 Magnet module Page 332	 Alignment set Page 540	 Clamping head adapter Page 513	 Accessory overview Page 478

TOPlus

Six to win



Up to 25 % more clamping force and higher output – with the same draw force of the clamping cylinder that is used to actuate our SPANNTOP chucks. The pyramid arrangement of glide surfaces is what makes it possible. The clamping head rests with full-surface contact in the TOPlus chuck body – even with large workpiece tolerances. In addition this geometry ensures that TOPlus is significantly less sensitive to contamination than previous chuck/clamping head solutions, and it offers a concentric precision of approx. 0.015 mm [for chuck size 65]! Thus TOPlus is even better suited for raw material, cast and forged parts, as well as fine-particle non-ferrous metals such as brass. Therefore, the optimized values make the chuck an ideal partner for modern manufacturing strategies and state-of-the-art machine tools.

TOPlus – simply revolutionary!

Key advantages

- 25 % higher holding power than SPANNTOP
- Unequalled rigidity due to full-surface contact of the clamping segments
- Superior resistance to contamination because of the clamping head geometry
- Absorbs vibration
- Optimal lubrication thanks to lubricating grooves in the clamping head reception
- Minimal inertia loss compared to 3-jaw chucks



TOPlus combi pull-back chuck in use

TOPlus chuck types

	TOPlus combi pull-back	TOPlus combi deadlength	TOPlus modular
		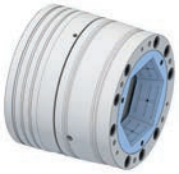	
Description	Workpiece clamping with pull-back effect. Chuck with dismountable end-stop plate. Without end-stop plate ideal for machining pipes and bars.	Workpiece clamping without pull-back effect. Chuck with dismountable end-stop plate. It is also frequently used on the sub spindle.	Through-bore chuck only – ideal for machining pipes and bars.
Advantages	■ Workpiece stabilization through axial draw force applied against the workpiece end-stop ■ Prepared for inside and front end-stop ■ Converts to a fully functional »bar chuck« when the end-stop plate is removed	■ Workpiece clamping without axial movement of the clamping head ■ Clamps workpieces with a short collar or shoulder ■ Suitable for pick-off without pull-back effect ■ Prepared for inside and front end-stop ■ Converts to a fully functional »bar chuck« when the end-stop plate is removed	■ Fully-functional bar chuck ■ Due to pull-back effect significantly more rigid clamping is achieved than by conventional collets ■ Higher RPM and metal removal rates for bar work
Clamping elements	 Clamping head SE	 Clamping head SE	 Clamping head SE
Adaptations	 MANDO Adapt T211 SE [Mandrel-in-clamping-device, with draw bolt]  MANDO Adapt T212 SE [Mandrel-in-clamping-device, without draw bolt]  Jaw module SE [Adaptation for jaw clamping]  Face driver SE / Morse taper adapter SE [Adaptation for clamping between centers]  Magnet module SE [Adaptation for magnetic clamping]		 MANDO Adapt T211 SE [Mandrel-in-clamping-device, with draw bolt]  MANDO Adapt T212 SE [Mandrel-in-clamping-device, without draw bolt]  Jaw module SE [Adaptation for jaw clamping]  Face driver SE / Morse taper adapter SE [Adaptation for clamping between centers]  Magnet module SE [Adaptation for magnetic clamping]

TOPlus combi pull-back in detail

Designation	
1 Vulcanized clamping head with pull-back and hexagonal geometry for optimum chuck sealing and improved clamping force 2 Mounting threads for front end-stop 3 Grease nipple, optimal holding power due to efficient lubrication 4 Clamping screw for base end-stop, easy mounting through external actuation 5 Spindle flange 6 Full chuck through-bore for bar work after disassembling the base end-stop 7 Mounting thread for drawtube connection 8 Fixed base end-stop for clamping with pull-back effect, central mounting thread for workpiece specific end-stop	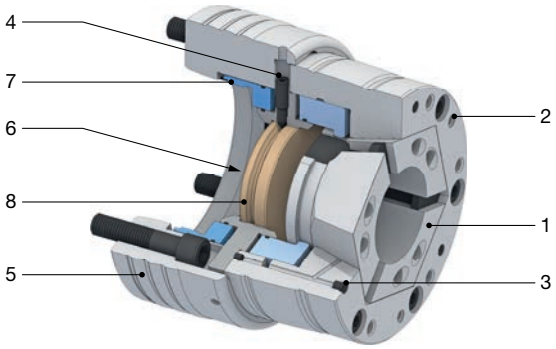

TOPlus combi deadlength in detail

Designation	
1 Vulcanized standing clamping head with hexagonal geometry for improved chuck sealant and higher clamping force 2 Mounting threads for front end-stop 3 Grease nipple, optimal holding power due to efficient lubrication 4 Clamping screw for base end-stop, easy mounting through external actuation 5 Spindle flange 6 Full chuck through-bore for bar work after disassembling the base end-stop 7 Mounting thread for drawtube connection 8 Fixed base end-stop with central mounting thread for workpiece specific end-stop	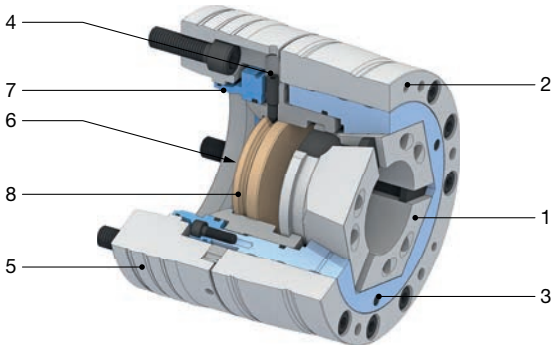

TOPlus modular in detail

Designation	
1 Vulcanized clamping head with pull-back and hexagonal geometry for optimum chuck sealing and improved clamping force 2 Mounting threads for front end-stop 3 Grease nipple, optimal holding power due to efficient lubrication 4 Spindle flange 5 Full chuck passage for bar work 6 Mounting thread for drawtube connection 7 Mounting thread for guide rings, introduction, spring ejectors, etc.	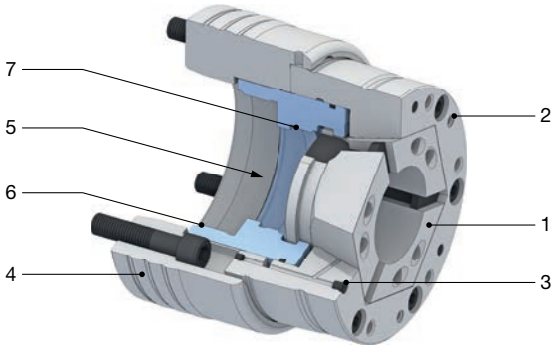

Order overview. TOPlus chuck

Size	Variant	Spindle nose	Material no.	In stock	Clamping elements and adaptations					
										
					Clamping head SE Page 422	MANDO Adapt T211 SE Page 274	MANDO Adapt T212 SE Page 280	Jaw module SE Page 316	Face driver / morse taper adapter SE Page 324	Magnet module SE Page 332
52	Combi pull-back	A2-5	10001926	-	✔	✔	✔		✔	✔
		A2-6	10001927	-						
		AP120	10001928	-						
		AP140	10001929	-						
	Combi deadlength	A2-5	10001945	-	✔					
		A2-6	10001946	-						
		AP120	10001947	-						
		AP140	10001948	-						
	Modular	A2-5	10001913	-	✔	✔	✔		✔	✔
		A2-6	10001914	-						
		AP120	10001915	-						
		AP140	10001916	-						
65	Combi pull-back	A2-5	10001920	-	✔	✔	✔	✔	✔	✔
		A2-6	10001921	-						
		A2-8	10001922	-						
		AP120	10001923	-						
		AP140	10001924	-						
		AP170	10001925	-						
	Combi deadlength	A2-5	10001936	-	✔					
		A2-6	10001937	-						
		A2-8	10001938	-						
		AP140	10001939	-						
		AP170	10001940	-						
	Modular	A2-5	10001907	-	✔	✔	✔	✔	✔	✔
		A2-6	10001908	-						
		A2-8	10001909	-						
		AP120	10001910	-						
		AP140	10001911	-						
		AP170	10001912	-						
100	Combi pull-back	A2-6	10001930	-	✔	✔	✔	✔	✔	✔
		A2-8	10001931	-						
		A2-11	10001935	-						
		AP170	10001932	-						
		AP220	10001933	-						
	Combi deadlength	A2-6	10001941	-	✔					
		A2-8	10001942	-						
		AP170	10001943	-						
		AP220	10001944	-						
	Modular	A2-8	10001917	-	✔	✔	✔	✔	✔	✔
		AP170	10001918	-						
		AP220	10001919	-						

Detailed technical data follows.

For more connection data please visit www.hainbuch.com

Scope of delivery

- Chuck
- Base end-stop [depending on the variant]
- Chip protection cover

TOPlus combi pull-back size 52. Technical data

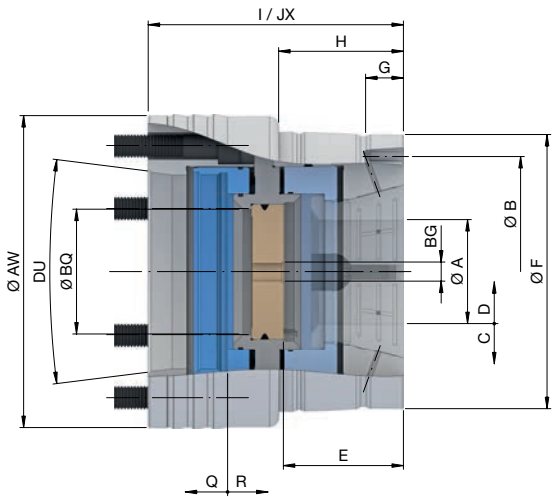

Size		52			
Variant		**Combi pull-back**			
Spindle nose	DU	A2-5	A2-6	AP120	AP140
Run-out ≤ [mm]		0,010			
Max. radial clamping force [kN]		108			
Max. axial drawtube force [pull / push] [kN]		40			
RPM n max. [1/min.]		7000			
Clamping range [mm]	A	3 – 52			
Release stroke in Ø [mm]	C	0,6			
Reserve stroke in Ø [mm]	D	1			
Range / recommended workpiece tolerance [mm]		± 0,5			
End-stop depth [mm]	E	56,5			
Ø Capacity [mm]	BQ	53			
End-stop thread size [M]	BG	10			
Location front end-stop	F	Ø 125 f7			
Centering length [mm]	G	17			
Bolt hole circle end-stop	B	LK Ø 107 [3 x M6]			
Length [mm]	H	59			
Total length [mm]	I	122		115	
Total length with guard plate [mm]	JX	125		118	
Reserve stroke axial [mm]	Q	2			
Release stroke axial [mm]	R	2,5			
Outer Ø [mm]	AW	144	165	144	150
Weight [kg]		10	12	9	10
In stock		-	-	-	-
Material no.		10001926	10001927	10001928	10001929

Machine spindle standard DIN 55026.
Total length can be extended via flange.

					
Clamping heads Page 422	Adaptations I.D. clamping Page 270	Face driver / morse taper Page 324	Magnet module Page 332	Alignment set Page 540	Accessory overview Page 478

TOPlus combi deadlength size 52. Technical data

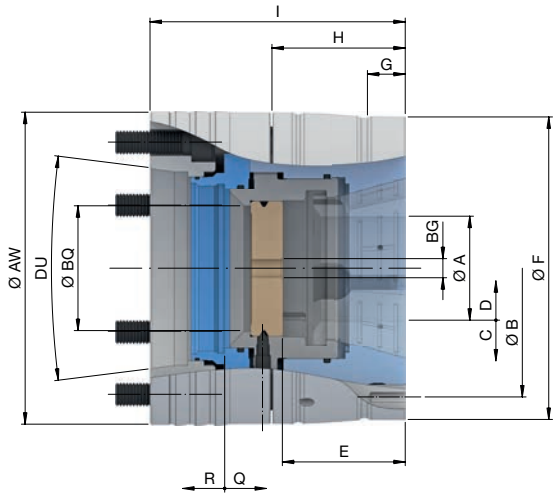

Size		52			
Variant		**Combi deadlength**			
Spindle nose	DU	A2-5	A2-6	AP120	AP140
Run-out ≤ [mm]		0,020			
Max. radial clamping force [kN]		108			
Max. axial compression force [kN]		40			
RPM n max. [1/min.]		7000			
Clamping range [mm]	A	3 – 52			
Release stroke in Ø [mm]	C	0,6			
Reserve stroke in Ø [mm]	D	1			
Range / recommended workpiece tolerance [mm]		± 0,5			
End-stop depth [mm]	E	54,8			
Ø Capacity [mm]	BQ	53			
End-stop thread size [M]	BG	10			
Location front end-stop	F	Ø 140 f7			
Centering length [mm]	G	17			
Bolt hole circle end-stop	B	LK Ø 122 [3 x M6]			
Length [mm]	H	61,5			
Total length [mm]	I	120		110	
Reserve stroke axial [mm]	Q	2			
Release stroke axial [mm]	R	2,5			
Outer Ø [mm]	AW	145	162	145	150
Weight [kg]		11	12	10	11
In stock		-	-	-	-
Material no.		10001945	10001946	10001947	10001948

Machine spindle standard DIN 55026.
Total length can be extended via flange.


Clamping heads
Page 422


Alignment set
Page 540


Accessory overview
Page 478

TOPlus modular size 52. Technical data

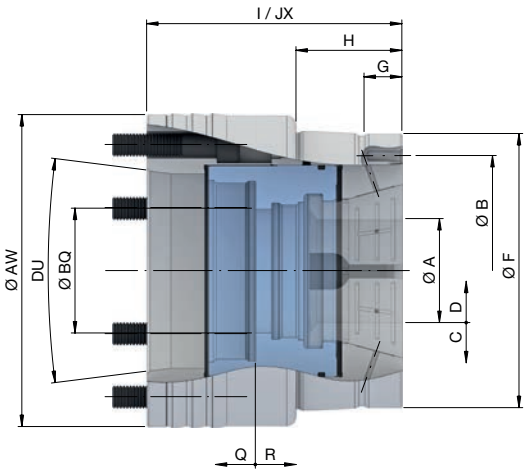

Size		52			
Variant		**Modular**			
Spindle nose	DU	A2-5	A2-6	AP120	AP140
Run-out ≤ [mm]		0,010			
Max. radial clamping force [kN]		108			
Max. axial drawtube force [pull / push] [kN]		40			
RPM n max. [1/min.]		7000			
Clamping range [mm]	A	3 – 52			
Release stroke in Ø [mm]	C	0,6			
Reserve stroke in Ø [mm]	D	1			
Range / recommended workpiece tolerance [mm]		± 0,5			
Ø Capacity [mm]	BQ	53			
Location front end-stop	F	Ø 125 f7			
Centering length [mm]	G	17			
Bolt hole circle end-stop	B	LK Ø 107 [3 x M6]			
Length [mm]	H	49			
Total length [mm]	I	112		105	
Total length with guard plate [mm]	JX	115		108	
Reserve stroke axial [mm]	Q	2			
Release stroke axial [mm]	R	2,5			
Outer Ø [mm]	AW	144	165	144	150
Weight [kg]		9	11	9	
In stock		-	-	-	-
Material no.		10001913	10001914	10001915	10001916

Machine spindle standard DIN 55026.
Total length can be extended via flange.

					
Clamping heads Page 422	Adaptations I.D. clamping Page 270	Face driver / morse taper Page 324	Magnet module Page 332	Alignment set Page 540	Accessory overview Page 478

TOPlus combi pull-back size 65. Technical data

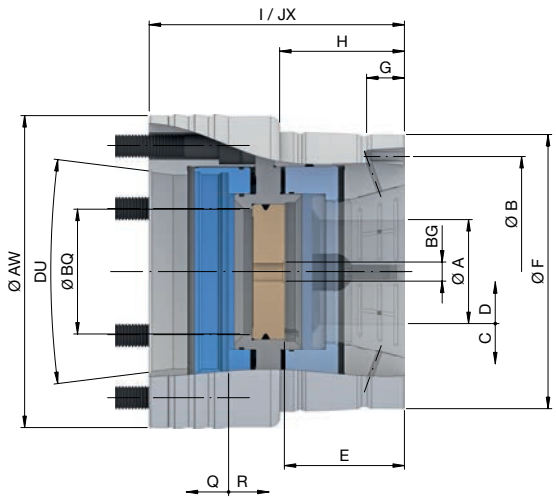

Size		65					
Variant		Combi pull-back					
Spindle nose	DU	A2-5	A2-6	A2-8	AP120	AP140	AP170
Run-out ≤ [mm]		0,010					
Max. radial clamping force [kN]		120					
Max. axial drawtube force [pull / push] [kN]		45					
RPM n max. [1/min.]		6000					
Clamping range [mm]	A	3 – 65					
Release stroke in Ø [mm]	C	0,6					
Reserve stroke in Ø [mm]	D	1					
Range / recommended workpiece tolerance [mm]		± 0,5					
End-stop depth [mm]	E	63,5					
Ø Capacity [mm]	BQ	66					
End-stop thread size [M]	BG	12					
Location front end-stop	F	Ø 145 f7					
Centering length [mm]	G	20					
Bolt hole circle end-stop	B	LK Ø 126 [3 x M6]					
Length [mm]	H	66					
Total length [mm]	l	131	130	131	120		115
Total length with guard plate [mm]	JX	134	133	134	123		118
Reserve stroke axial [mm]	Q	2					
Release stroke axial [mm]	R	2,5					
Outer Ø [mm]	AW	160	165	210	160		184
Weight [kg]		14	12	18	12	13	12
In stock		-	-	-	-	-	-
Material no.		10001920	10001921	10001922	10001923	10001924	10001925

Machine spindle standard DIN 55026.
Total length can be extended via flange.


Clamping heads
Page 422


Adaptations I.D. clamping
Page 270


Adaptations jaw clamping
Page 316


Face driver / morse taper
Page 324


Magnet module
Page 332


Alignment set
Page 540


Accessory overview
Page 478

TOPlus combi deadlength size 65. Technical data

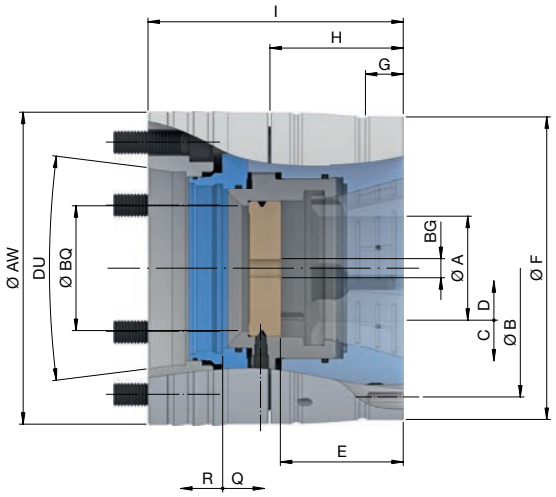

Size		65				
Variant		Combi deadlength				
Spindle nose	DU	A2-5	A2-6	A2-8	AP140	AP170
Run-out ≤ [mm]		0,020				
Max. radial clamping force [kN]		120				
Max. axial compression force [kN]		45				
RPM n max. [1/min.]		6000				
Clamping range [mm]	A	3 – 65				
Release stroke in Ø [mm]	C	0,6				
Reserve stroke in Ø [mm]	D	1				
Range / recommended workpiece tolerance [mm]		± 0,5				
End-stop depth [mm]	E	65				
Ø Capacity [mm]	BQ	66				
End-stop thread size [M]	BG	12				
Location front end-stop	F	Ø 160 f7				
Centering length [mm]	G	17				
Bolt hole circle end-stop	B	LK Ø 141 [3 x M6]				
Length [mm]	H	71,5				
Total length [mm]	I	135				125
Reserve stroke axial [mm]	Q	2				
Release stroke axial [mm]	R	2,5				
Outer Ø [mm]	AW	165		210	165	180
Weight [kg]		16		21	16	
In stock		-	-	-	-	-
Material no.		10001936	10001937	10001938	10001939	10001940

Machine spindle standard DIN 55026.
Total length can be extended via flange.

		
Clamping heads Page 422	Alignment set Page 540	Accessory overview Page 478

TOPlus modular size 65. Technical data

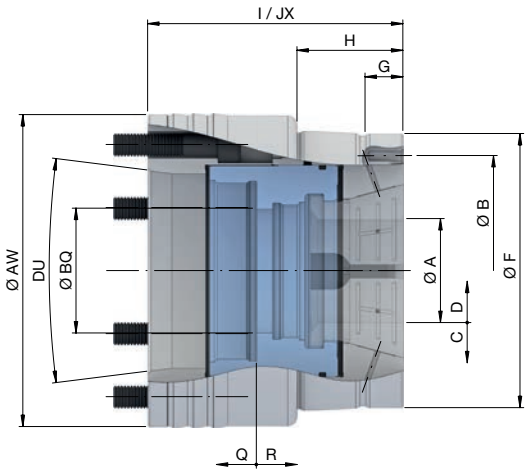

Size		**65**					
Variant		**Modular**					
Spindle nose	DU	A2-5	A2-6	A2-8	AP120	AP140	AP170
Run-out ≤ [mm]		0,010					
Max. radial clamping force [kN]		120					
Max. axial drawtube force [pull / push] [kN]		45					
RPM n max. [1/min.]		6000					
Clamping range [mm]	A	3 – 65					
Release stroke in Ø [mm]	C	0,6					
Reserve stroke in Ø [mm]	D	1					
Range / recommended workpiece tolerance [mm]		± 0,5					
Ø Capacity [mm]	BQ	66					
Location front end-stop	F	Ø 145 f7					
Centering length [mm]	G	20					
Bolt hole circle end-stop	B	LK Ø 126 [3 x M6]					
Length [mm]	H	56					
Total length [mm]	I	121	120	121	110		105
Total length with guard plate [mm]	JX	124	123	124	113		108
Reserve stroke axial [mm]	Q	2					
Release stroke axial [mm]	R	2,5					
Outer Ø [mm]	AW	160	165	210	160		184
Weight [kg]		12		17	11		12
In stock		-	-	-	-	-	-
Material no.		10001907	10001908	10001909	10001910	10001911	10001912

Machine spindle standard DIN 55026.
Total length can be extended via flange.


Clamping heads
Page 422

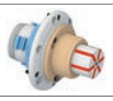
Adaptations I.D. clamping
Page 270


Adaptations jaw clamping
Page 316


Face driver / morse taper
Page 324


Magnet module
Page 332


Alignment set
Page 540


Accessory overview
Page 478

TOPlus combi pull-back size 100. Technical data

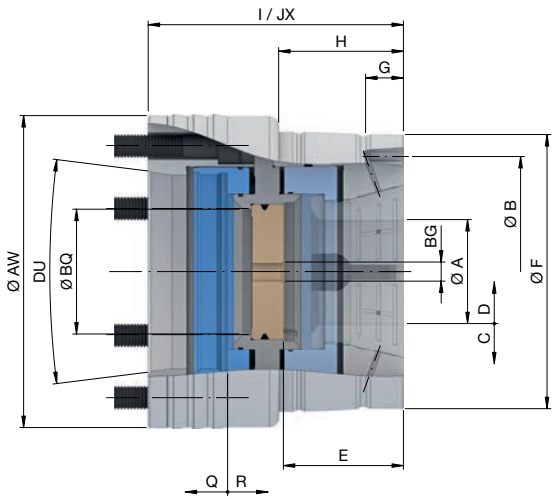

Size		100				
Variant		Combi pull-back				
Spindle nose	DU	A2-6	A2-8	A2-11	AP170	AP220
Run-out ≤ [mm]		0,015				
Max. radial clamping force [kN]		172				
Max. axial drawtube force [pull / push] [kN]		65				
RPM n max. [1/min.]		5000				
Clamping range [mm]	A	15 – 100				
Release stroke in Ø [mm]	C	1,6		2	1,6	
Reserve stroke in Ø [mm]	D	1,5				
Range / recommended workpiece tolerance [mm]		± 1,0				
End-stop depth [mm]	E	73				
Ø Capacity [mm]	BQ	101				
End-stop thread size [M]	BG	12				
Location front end-stop	F	Ø 215 f7				
Centering length [mm]	G	23				
Bolt hole circle end-stop	B	LK Ø 180 [3 x M8]				
Length [mm]	H	78,5				
Total length [mm]	l	155	159	165	159	
Total length with guard plate [mm]	JX	159	163	169	163	
Reserve stroke axial [mm]	Q	3				
Release stroke axial [mm]	R	5				
Outer Ø [mm]	AW	235		280	235	240
Weight [kg]		33	32	42	32	35
In stock		-	-	-	-	-
Material no.		10001930	10001931	10001935	10001932	10001933

Machine spindle standard DIN 55026.
Total length can be extended via flange.

 Clamping heads Page 422	 Adaptations I.D. clamping Page 270	 Adaptations jaw clamping Page 316	 Face driver / morse taper Page 324	 Magnet module Page 332	 Clamping head adapter Page 513	 Alignment set Page 540	 Accessory overview Page 478

TOPlus combi deadlength size 100. Technical data

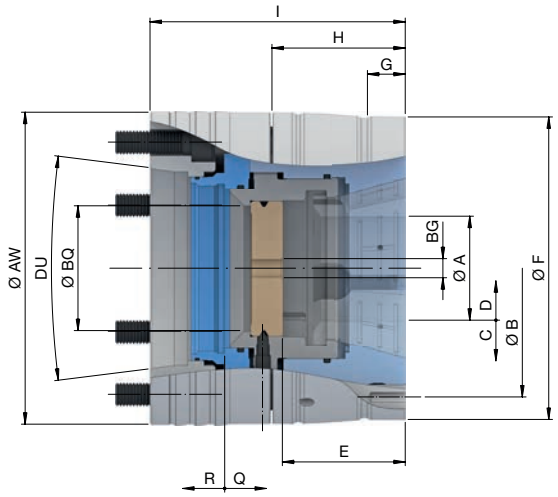

Size		100			
Variant		**Combi deadlength**			
Spindle nose	DU	A2-6	A2-8	AP170	AP220
Run-out ≤ [mm]		0,025			
Max. radial clamping force [kN]		172			
Max. axial compression force [kN]		65			
RPM n max. [1/min.]		5000			
Clamping range [mm]	A	15 – 100			
Release stroke in Ø [mm]	C	1,6			
Reserve stroke in Ø [mm]	D	1,5			
Range / recommended workpiece tolerance [mm]		± 1,0			
End-stop depth [mm]	E	85,5			
Ø Capacity [mm]	BQ	84	101		
End-stop thread size [M]	BG	12			
Location front end-stop	F	Ø 215 f7			
Centering length [mm]	G	23			
Bolt hole circle end-stop	B	LK Ø 192 [3 x M8]			
Length [mm]	H	94			
Total length [mm]	I	175		180	170
Reserve stroke axial [mm]	Q	3			
Release stroke axial [mm]	R	5			
Outer Ø [mm]	AW	220			240
Weight [kg]		36	34	37	38
In stock		-	-	-	-
Material no.		10001941	10001942	10001943	10001944

Machine spindle standard DIN 55026.
Total length can be extended via flange.


Clamping heads
Page 422


Clamping head adapter
Page 513


Alignment set
Page 540


Accessory overview
Page 478

TOPlus modular size 100. Technical data

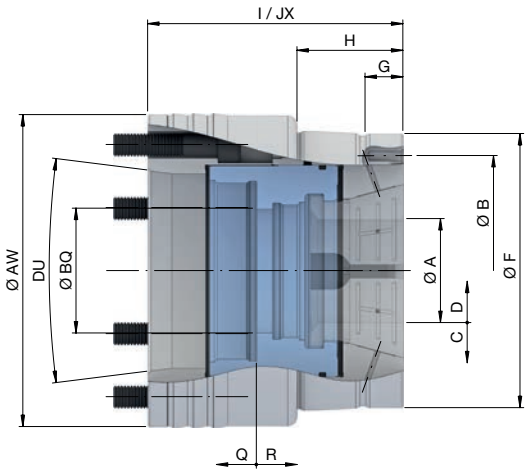

Size		100		
Variant		Modular		
Spindle nose	DU	A2-8	AP170	AP220
Run-out ≤ [mm]		0,015		
Max. radial clamping force [kN]		172		
Max. axial drawtube force [pull / push] [kN]		65		
RPM n max. [1/min.]		5000		
Clamping range [mm]	A	15 – 100		
Release stroke in Ø [mm]	C	2		
Reserve stroke in Ø [mm]	D	1,5		
Range / recommended workpiece tolerance [mm]		± 1,0		
Ø Capacity [mm]	BQ	104,5		
Location front end-stop	F	Ø 215 f7		
Centering length [mm]	G	23		
Bolt hole circle end-stop	B	LK Ø 180 [3 x M8]		
Length [mm]	H	68,5		
Total length [mm]	I	149		
Total length with guard plate [mm]	JX	153		
Reserve stroke axial [mm]	Q	3		
Release stroke axial [mm]	R	5		
Outer Ø [mm]	AW	235		240
Weight [kg]		28	31	30
In stock		-	-	-
Material no.		10001917	10001918	10001919

Machine spindle standard DIN 55026.
Total length can be extended via flange.

							
Clamping heads Page 422	Adaptations I.D. clamping Page 270	Adaptations jaw clamping Page 316	Face driver / morse taper Page 324	Magnet module Page 332	Clamping head adapter Page 513	Alignment set Page 540	Accessory overview Page 478

SPANNTOP mini

HAINBUCH SYSTEM



The »mini« series really shines with a mass reduced by as much as 30 %, and a chuck diameter that is reduced by 1/3. This means reduced energy consumption and better tool accessibility. Naturally, adaptation devices may also be used with the SPANNTOP mini. An additional ring enables use of the adaptation devices that are also used with the SPANNTOP nova.

Thanks to the reduced interference contour, it is easier to choose the tool that you need. Now it can also be shorter and more stable – on the main and sub spindles. Particularly in the case of limited installation space and in series operation, SPANNTOP mini is ideal: Lower energy consumption, dynamic spindle acceleration, and shorter cycle times reduce the costs per workpiece.

Minimalism that pays off!

Key advantages

- Adaptation devices possible [HAINBUCH SYSTEM]
- Significantly reduced interference contour
- Improved tool accessibility
- Ideal for limited installation space
- Lower mass
- Minimal inertia loss compared to 3-jaw chucks

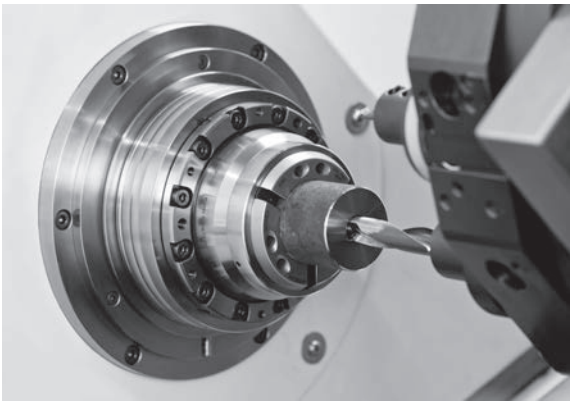

SPANNTOP mini pull-back in use

SPANNTOP mini chuck types

	SPANNTOP mini pull-back	SPANNTOP mini deadlength
		
Description	Workpiece clamping with pull-back effect. Chuck with dismountable end-stop plate.	Workpiece clamping without pull-back effect. Chuck with dismountable end-stop plate.
Advantages	■ Workpiece stabilization through axial draw force applied against the workpiece end-stop ■ Prepared for inside and front end-stop ■ Converts to a fully functional »bar chuck« when the end-stop plate is removed	■ Workpiece clamping without axial movement of the clamping head ■ Clamps workpieces with a short collar or shoulder ■ Suitable for pick-off without pull-back effect ■ Prepared for inside and front end-stop ■ Converts to a fully functional »bar chuck« when the end-stop plate is removed
Clamping elements	 Clamping head RD	 Clamping head RD
Adaptations	 MANDO Adapt T211 RD [Mandrel-in-clamping-device, with draw bolt]  MANDO Adapt T212 RD [Mandrel-in-clamping-device, without draw bolt]  Jaw module RD [Adaptation for jaw clamping]  Face driver RD / Morse taper adapter RD [Adaptation for clamping between centers]  Magnet module RD [Adaptation for magnetic clamping]	 MANDO Adapt T812 RD [Mandrel-in-clamping-device, without draw bolt]

An adaptation ring, which is available as an option, is required for use of clamping adaptation devices.

SPANNTOP mini pull-back in detail

Designation	
1 Vulcanized clamping head with hardened steel segments and pull-back 2 Adaptation ring [required for the adaptation elements] 3 Spindle flange 4 Chuck through-bore for bar work after disassembling the base end-stop 5 Fixed base end-stop with central mounting thread for workpiece specific end-stop 6 Mounting thread for drawtube connection 7 Clamping screw for base end-stop, easy mounting through external actuation 8 Torsional safety lock of the clamping head	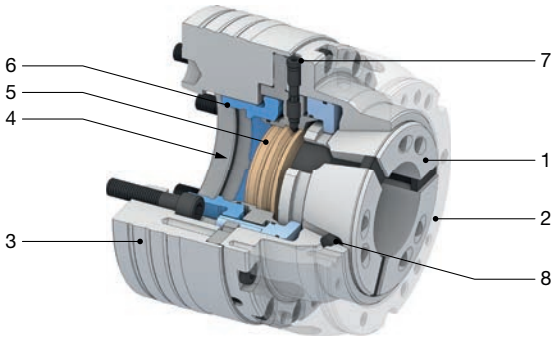

SPANNTOP mini deadlength in detail

Designation	
1 Vulcanized standing clamping head with hardened steel segments 2 Adaptation ring [required for the adaptation elements] 3 Spindle flange 4 Chuck through-bore for bar work after disassembling the base end-stop 5 Fixed base end-stop with central mounting thread for workpiece specific end-stop 6 Mounting thread for drawtube connection 7 Clamping screw for base end-stop, easy mounting through external actuation 8 Torsional safety lock of the clamping head	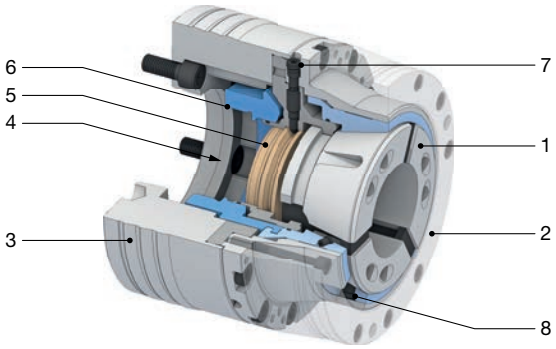

Order overview. SPANNTOP mini chuck

Size	Variant	Spindle nose	Total length [mm]	Material no.	In stock	Clamping elements and adaptations: Clamping head RD Page 430	MANDO Adapt T211 RD Page 290	MANDO Adapt T212 RD Page 296	MANDO Adapt T812 RD Page 308	Jaw module RD Page 316	Face driver / morse taper adapter RD Page 324	Magnet module RD Page 332
32	Pull-back	A2-4	117	10000850	✔	✔						
		A2-5		10000851	✔							
			140	10000852	✔							
		A2-6	117	10000897	✔							
	Deadlength	A2-4	112	10000910	✔	✔						
			122	10000911	✔							
		A2-5	114	10000912	✔							
			122	10000913	✔							
			142	10000914	✔							
		A2-6	115	10000967	✔							
		AP140	101	10000968	✔							
42	Pull-back	A2-4	122	10000853	✔	✔	✔	✔			✔	
		A2-5	114	10000854	✔							
			122	10000855	✔							
			140	10000856	✔							
		A2-6	122	10000857	✔							
			140	10000858	✔							
		AP120	102	10000859	✔							
			115	10000860	✔							
		AP140	102	10000861	✔							
			115	10000862	✔							
		AP170	102	10000901	✔							
	Deadlength	A2-4	125	10000951	✔	✔			✔			
		A2-5	118	10000915	✔							
			125	10000916	✔							
			142	10000917	✔							
		A2-6	124	10000918	✔							
			142	10000919	✔							
		AP110	105	10000952	✔							
		AP120		10000966	✔							
		AP140		10000920	✔							
			117	10000921	✔							

Detailed technical data follows.
An adaptation ring, which is available as an option, is required for use of clamping adaptation devices.

Machine spindle standard DIN ISO 702-1. For more connection data please visit www.hainbuch.com

Order overview. SPANNTOP mini chuck

Size	Variant	Spindle nose	Total length [mm]	Material no.	In stock	Clamping elements and adaptations: Clamping head RD Page 430	MANDO Adapt T211 RD Page 290	MANDO Adapt T212 RD Page 296	MANDO Adapt T812 RD Page 308	Jaw module RD Page 316	Face driver / morse taper adapter RD Page 324	Magnet module RD Page 332
52	Pull-back	A2-5	122	10000864	✔	✔	✔	✔			✔	✔
			145	10000865	✔							
		A2-6	122	10000866	✔							
		A2-6	145	10000867	✔							
		A2-8	120	10000894	✔							
			145	10000895	✔							
		AP110	120	10000891	✔							
		AP120	105	10000887	✔							
			115	10000888	✔							
		AP140	105	10000889	✔							
			115	10000890	✔							
	Deadlength	A2-4	122	10000922	✔	✔			✔			
		A2-5		10000923	✔							
			147	10000924	✔							
		A2-6	122	10000925	✔							
			147	10000926	✔							
		A2-8	120	10000950	✔							
		AP110	100	10000944	✔							
			115	10000953	✔							
		AP120	105	10000927	✔							
			115	10000928	✔							
		AP140	107	10000929	✔							
65	Pull-back	A2-5	124	10000898	✔	✔	✔	✔		✔	✔	✔
			130	10000841	✔							
			150	10000842	✔							
		A2-6	126	10000843	✔							
			130	10000844	✔							
			155	10000845	✔							
		A2-8	130	10000846	✔							
			155	10000847	✔							
		AP120	111	10000868	✔							
			120	10000869	✔							
		AP140	111	10000848	✔							
			120	10000849	✔							
		AP170	115	10000870	✔							
		AP220	112	10000896	✔							

Detailed technical data follows.
An adaptation ring, which is available as an option, is required for use of clamping adaptation devices.

Machine spindle standard DIN ISO 702-1. For more connection data please visit www.hainbuch.com

Order overview. SPANNTOP mini chuck

Size	Variant	Spindle nose	Total length [mm]	Material no.	In stock	Clamping elements and adaptations: Clamping head RD Page 430	MANDO Adapt T211 RD Page 290	MANDO Adapt T212 RD Page 296	MANDO Adapt T812 RD Page 308	Jaw module RD Page 316	Face driver / morse taper adapter RD Page 324	Magnet module RD Page 332
65	Deadlength	A2-4	128	10000965	✔	✔			✔			
		A2-5		10000902	✔							
		A2-5	138	10000903	✔							
		A2-6	124	10000904	✔							
			138	10000905	✔							
			163	10000906	✔							
		A2-8	133	10000907	✔							
			163	10000908	✔							
		AP110	125	10000949	✔							
		AP120	129	10000963	✔							
		AP140	138	10000909	✔							
		AP170	110	10000954	✔							
			128	10000930	✔							
		AP220	111	10000964	✔							
80	Pull-back	A2-5	132	10000892	✔	✔	✔	✔		✔	✔	✔
		A2-6	128	10000871	✔							
			135	10000872	✔							
			155	10000873	✔							
		A2-8	132	10000874	✔							
			150	10000875	✔							
			180	10000876	✔							
		AP140	132	10000900	✔							
		AP170	115	10000877	✔							
	Deadlength	A2-5	136	10000945	✔	✔			✔			
		A2-6	130	10000931	✔							
			137	10000932	✔							
			157	10000933	✔							
		A2-8	132	10000934	✔							
			152	10000935	✔							
			182	10000936	✔							
		AP140	134	10000937	✔							
		AP170	115	10000946	✔							

Detailed technical data follows.
An adaptation ring, which is available as an option, is required for use of clamping adaptation devices.

Machine spindle standard DIN ISO 702-1. For more connection data please visit www.hainbuch.com

Order overview. SPANNTOP mini chuck

Size	Variant	Spindle nose	Total length [mm]	Material no.	In stock	Clamping elements and adaptations: Clamping head RD Page 430	MANDO Adapt T211 RD Page 290	MANDO Adapt T212 RD Page 296	MANDO Adapt T812 RD Page 308	Jaw module RD Page 316	Face driver / morse taper adapter RD Page 324	Magnet module RD Page 332
100	Pull-back	A2-5	160	10000893	✔	✔	✔	✔		✔	✔	✔
		A2-6	164	10000879	✔							
			170	10000880	✔							
		A2-8	162	10000881	✔							
			180	10000882	✔							
		A2-11	180	10000883	✔							
			195	10000884	✔							
		AP140	161	10000899	✔							
		AP170	164	10000885	✔							
		AP220	150	10000886	✔							
	Deadlength	A2-5	171	10000959	✔	✔						
		A2-6	175	10000938	✔							
			182	10000939	✔							
		A2-8	169	10000940	✔							
			192	10000941	✔							
		A2-11	185	10000960	✔							
			200	10000961	✔							
		AP140	171	10000962	✔							
		AP170	175	10000942	✔							
		AP220	162	10000943	✔							

Detailed technical data follows.
An adaptation ring, which is available as an option, is required for use of clamping adaptation devices.

For more connection data please visit www.hainbuch.com

Scope of delivery

- Chuck
- Base end-stop
- Socket wrench insert 1/2"

SPANNTOP mini pull-back size 32. Technical data

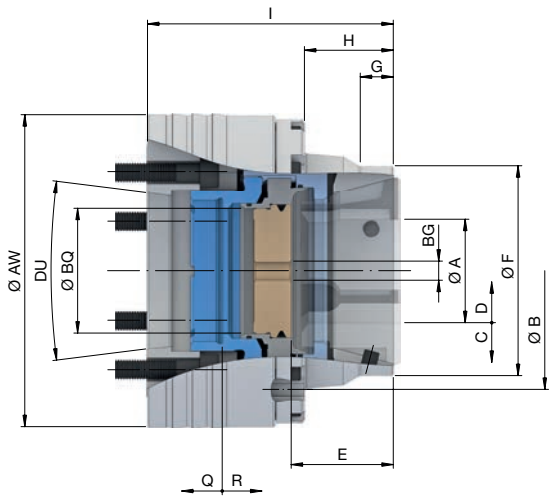

Size		32
Variant		**Pull-back**
Run-out ≤ [mm]		0,010
Max. radial clamping force [kN]		70
Max. axial drawtube force pull / push] [kN]		25
RPM n max. [1/min.]		8000
Clamping range [mm]	A	3 – 32
Release stroke in Ø [mm]	C	0,6
Reserve stroke in Ø [mm]	D	0,8
Range / recommended workpiece tolerance [mm]		± 0,3
End-stop depth [mm]	E	45
Ø Capacity [mm]	BQ	33
End-stop thread size [M]	BG	10
Location front end-stop	F	Ø 66 f7
Centering length [mm]	G	17
Bolt hole circle end-stop	B	LK Ø 110 [3 x M6]
Length [mm]	H	43
Reserve stroke axial [mm]	Q	2,5
Release stroke axial [mm]	R	3

Spindle nose	DU	A2-4	A2-5		A2-6
Total length [mm]	I	**117**		**140**	**117**
Outer Ø [mm]	AW	132			159
Weight [kg]		7,1	6,6	7,8	8,8
In stock		✔	✔	✔	✔
Material no.		10000850	10000851	10000852	10000897



Clamping heads
Page 430



Accessory overview
Page 478

SPANNTOP mini deadlength size 32. Technical data

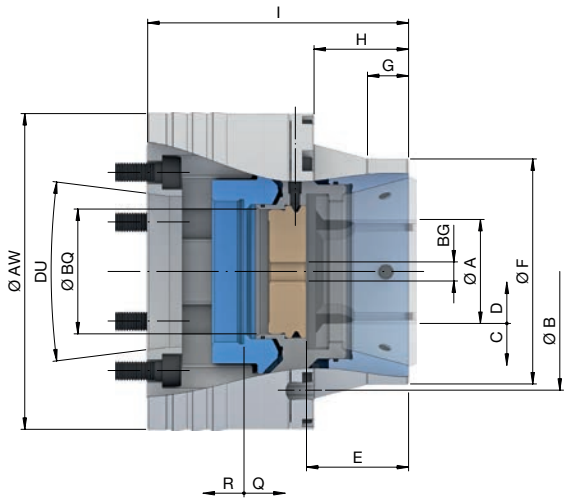

Size		32
Variant		**Deadlength**
Run-out ≤ [mm]		0,020
Max. radial clamping force [kN]		70
Max. axial compression force [kN]		25
RPM n max. [1/min.]		8000
Clamping range [mm]	A	3 – 32
Release stroke in Ø [mm]	C	0,6
Reserve stroke in Ø [mm]	D	1
Range / recommended workpiece tolerance [mm]		± 0,3
End-stop depth [mm]	E	45,5
Ø Capacity [mm]	BQ	33
End-stop thread size [M]	BG	10
Location front end-stop	F	Ø 74 f7
Centering length [mm]	G	15
Bolt hole circle end-stop	B	LK Ø 115 [3 x M6]
Length [mm]	H	44
Reserve stroke axial [mm]	Q	2,5
Release stroke axial [mm]	R	3

Spindle nose	DU	**A2-4**		**A2-5**			**A2-6**
Total length [mm]	I	**112**	**122**	**114**	**122**	**142**	**115**
Outer Ø [mm]	AW			130			159
Weight [kg]		6,6	7,2	6,4	6,8	7,8	8,6
In stock		✔	✔	✔	✔	✔	✔
Material no.		10000910	10000911	10000912	10000913	10000914	10000967

Spindle nose	DU	**AP140**
Total length [mm]	I	**101**
Outer Ø [mm]	AW	149
Weight [kg]		7,2
In stock		✔
Material no.		10000968



Clamping heads
Page 430



Accessory overview
Page 478

SPANNTOP mini pull-back size 42. Technical data

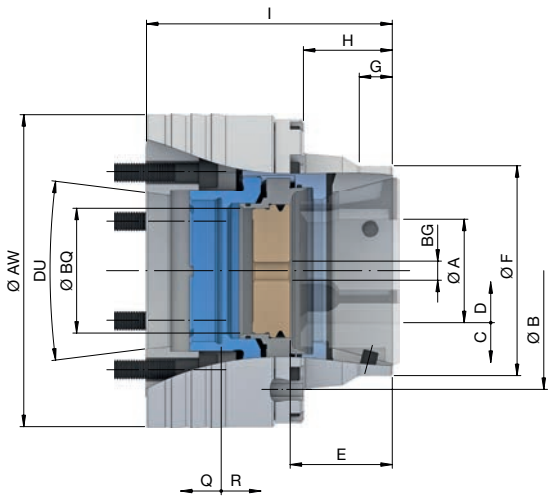

Size		42
Variant		**Pull-back**
Run-out ≤ [mm]		0,010
Max. radial clamping force [kN]		80
Max. axial drawtube force [pull / push] [kN]		35
RPM n max. [1/min.]		7000
Clamping range [mm]	A	3 – 42
Release stroke in Ø [mm]	C	0,6
Reserve stroke in Ø [mm]	D	1
Range / recommended workpiece tolerance [mm]		± 0,5
End-stop depth [mm]	E	42
Ø Capacity [mm]	BQ	44
End-stop thread size [M]	BG	10
Location front end-stop	F	Ø 90 f7
Centering length [mm]	G	15
Bolt hole circle end-stop	B	LK Ø 117 [3 x M6]
Length [mm]	H	42
Reserve stroke axial [mm]	Q	2
Release stroke axial [mm]	R	2,5

Spindle nose	DU	A2-4	A2-5			A2-6	
Total length [mm]	I	**122**	**114**	**122**	**140**	**122**	**140**
Outer Ø [mm]	AW	134				159	
Weight [kg]		7,6	6,8	7,3	8,3	9,1	10,4
In stock		✔	✔	✔	✔	✔	✔
Material no.		10000853	10000854	10000855	10000856	10000857	10000858

Spindle nose	DU	AP120		AP140		AP170
Total length [mm]	I	**102**	**115**	**102**	**115**	**102**
Outer Ø [mm]	AW	134		150		180
Weight [kg]		6,2	6,9	7,5	8,5	10,4
In stock		✔	✔	✔	✔	✔
Material no.		10000859	10000860	10000861	10000862	10000901


Clamping heads
Page 430


Adaptations I.D. clamping
Page 270


Face driver / morse taper
Page 324


Accessory overview
Page 478

SPANNTOP mini deadlength size 42. Technical data

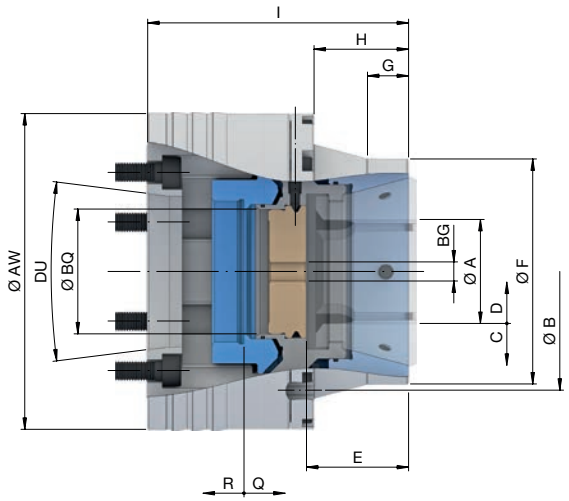

Size		42
Variant		**Deadlength**
Run-out ≤ [mm]		0,020
Max. radial clamping force [kN]		80
Max. axial compression force [kN]		35
RPM n max. [1/min.]		7000
Clamping range [mm]	A	3 – 42
Release stroke in Ø [mm]	C	0,6
Reserve stroke in Ø [mm]	D	1
Range / recommended workpiece tolerance [mm]		± 0,5
End-stop depth [mm]	E	45,8
Ø Capacity [mm]	BQ	44
End-stop thread size [M]	BG	10
Location front end-stop	F	Ø 98 f7
Centering length [mm]	G	25
Bolt hole circle end-stop	B	LK Ø 113 [9 x M6]
Length [mm]	H	44
Reserve stroke axial [mm]	Q	2
Release stroke axial [mm]	R	2,5

Spindle nose	DU	A2-4	A2-5			A2-6	
Total length [mm]	l	125	118	125	142	124	142
Outer Ø [mm]	AW	139				159	
Weight [kg]		8,5	7,9	8,4	9,5	10	11,3
In stock		✔	✔	✔	✔	✔	✔
Material no.		10000951	10000915	10000916	10000917	10000918	10000919

Spindle nose	DU	AP110	AP120	AP140	
Total length [mm]	l	105			117
Outer Ø [mm]	AW	149			
Weight [kg]		8,2	8,1	8	9
In stock		✔	✔	✔	✔
Material no.		10000952	10000966	10000920	10000921



Clamping heads
Page 430



Adaptations I.D. clamping
Page 308



Accessory overview
Page 478

SPANNTOP mini pull-back size 52. Technical data

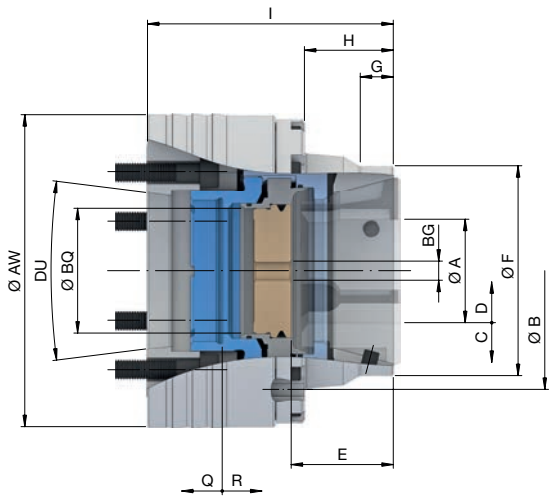

Size		52
Variant		**Pull-back**
Run-out ≤ [mm]		0,010
Max. radial clamping force [kN]		94
Max. axial drawtube force [pull / push] [kN]		40
RPM n max. [1/min.]		7000
Clamping range [mm]	A	3 – 52
Release stroke in Ø [mm]	C	0,6
Reserve stroke in Ø [mm]	D	1
Range / recommended workpiece tolerance [mm]		± 0,5
End-stop depth [mm]	E	46
Ø Capacity [mm]	BQ	53
End-stop thread size [M]	BG	10
Location front end-stop	F	Ø 90 f7
Centering length [mm]	G	15
Bolt hole circle end-stop	B	LK Ø 133 [3 x M8]
Length [mm]	H	45
Reserve stroke axial [mm]	Q	2
Release stroke axial [mm]	R	2,5

Spindle nose	DU	A2-5		A2-6		A2-8	
Total length [mm]	I	122	145	122	145	120	145
Outer Ø [mm]	AW	149		159		204	
Weight [kg]		9,3	11,1	9,5	11,1	14,4	17,3
In stock		✔	✔	✔	✔	✔	✔
Material no.		10000864	10000865	10000866	10000867	10000894	10000895

Spindle nose	DU	AP110	AP120		AP140	
Total length [mm]	I	120	105	115	105	115
Outer Ø [mm]	AW	149			150	
Weight [kg]		9,5	8	8,8	7,9	8,8
In stock		✔	✔	✔	✔	✔
Material no.		10000891	10000887	10000888	10000889	10000890

 Clamping heads Page 430	 Adaptations I.D. clamping Page 270	 Face driver / morse taper Page 324	 Magnet module Page 332	 Accessory overview Page 478

SPANNTOP mini deadlength size 52. Technical data

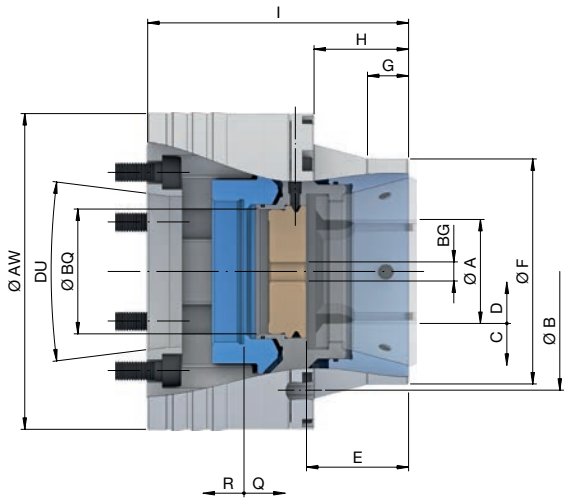

Size		52
Variant		**Deadlength**
Run-out ≤ [mm]		0,020
Max. radial clamping force [kN]		94
Max. axial compression force [kN]		40
RPM n max. [1/min.]		7000
Clamping range [mm]	A	3 – 52
Release stroke in Ø [mm]	C	0,6
Reserve stroke in Ø [mm]	D	1
Range / recommended workpiece tolerance [mm]		± 0,5
End-stop depth [mm]	E	45,8
Ø Capacity [mm]	BQ	53
End-stop thread size [M]	BG	10
Location front end-stop	F	Ø 98 f7
Centering length [mm]	G	23
Bolt hole circle end-stop	B	LK Ø 125 [9 x M6]
Length [mm]	H	44
Reserve stroke axial [mm]	Q	2
Release stroke axial [mm]	R	2,5

Spindle nose	DU	**A2-4**	**A2-5**		**A2-6**		**A2-8**
Total length [mm]	I	**122**		**147**	**122**	**147**	**120**
Outer Ø [mm]	AW	149			163		202
Weight [kg]		9,7	9,4	11,3	10,4	12,4	14,3
In stock		✔	✔	✔	✔	✔	✔
Material no.		10000922	10000923	10000924	10000925	10000926	10000950

Spindle nose	DU	**AP110**		**AP120**		**AP140**
Total length [mm]	I	**100**	**115**	**105**	**115**	**107**
Outer Ø [mm]	AW	149				
Weight [kg]		7,8	9,1	8,2	8,9	8,1
In stock		✔	✔	✔	✔	✔
Material no.		10000944	10000953	10000927	10000928	10000929


Clamping heads
Page 430


Adaptations I.D. clamping
Page 308


Accessory overview
Page 478

SPANNTOP mini pull-back size 65. Technical data

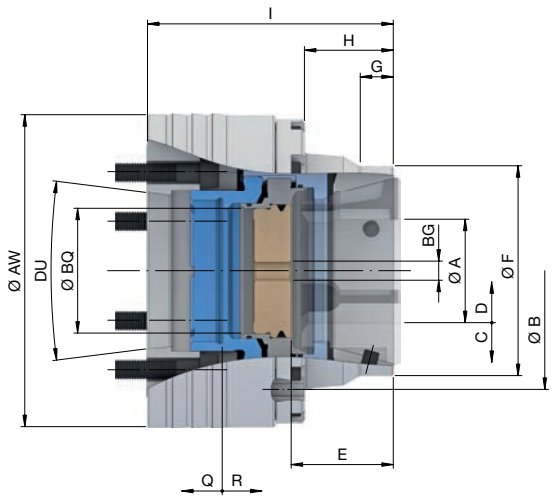

Size		65
Variant		**Pull-back**
Run-out ≤ [mm]		0,010
Max. radial clamping force [kN]		105
Max. axial drawtube force [pull / push] [kN]		45
RPM n max. [1/min.]		6000
Clamping range [mm]	A	3 – 65
Release stroke in Ø [mm]	C	0,6
Reserve stroke in Ø [mm]	D	1
Range / recommended workpiece tolerance [mm]		± 0,5
End-stop depth [mm]	E	54
Ø Capacity [mm]	BQ	66
End-stop thread size [M]	BG	12
Location front end-stop	F	Ø 111 f7
Centering length [mm]	G	18
Bolt hole circle end-stop	B	LK Ø 145 [3 x M8]
Length [mm]	H	47
Reserve stroke axial [mm]	Q	2
Release stroke axial [mm]	R	2,5

Spindle nose	DU	A2-5			A2-6			A2-8	
Total length [mm]	I	**124**	**130**	**150**	**126**	**130**	**155**	**130**	**155**
Outer Ø [mm]	AW	165						204	
Weight [kg]		11,4	12,1	14,2	10,5	10,7	12,5	14,9	18,1
In stock		✔	✔	✔	✔	✔	✔	✔	✔
Material no.		10000898	10000841	10000842	10000843	10000844	10000845	10000846	10000847

Spindle nose	DU	AP120		AP140		AP170	AP220
Total length [mm]	I	**111**	**120**	**111**	**120**	**115**	**112**
Outer Ø [mm]	AW	165				180	230
Weight [kg]		10,4	11,3	10	10,7	11,3	16,6
In stock		✔	✔	✔	✔	✔	✔
Material no.		10000868	10000869	10000848	10000849	10000870	10000896


Clamping heads
Page 430


Adaptations I.D. clamping
Page 270


Adaptations jaw clamping
Page 316


Face driver / morse taper
Page 324


Magnet module
Page 332


Accessory overview
Page 478

SPANNTOP mini deadlength size 65. Technical data

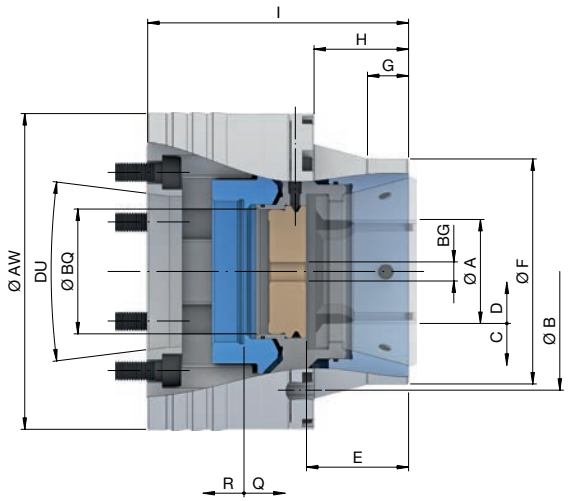

Size		65
Variant		**Deadlength**
Run-out ≤ [mm]		0,020
Max. radial clamping force [kN]		105
Max. axial compression force [kN]		45
RPM n max. [1/min.]		6000
Clamping range [mm]	A	3 – 65
Release stroke in Ø [mm]	C	0,6
Reserve stroke in Ø [mm]	D	1
Range / recommended workpiece tolerance [mm]		± 0,5
End-stop depth [mm]	E	54
Ø Capacity [mm]	BQ	66
End-stop thread size [M]	BG	12
Location front end-stop	F	Ø 119 f7
Centering length [mm]	G	22
Bolt hole circle end-stop	B	LK Ø 145 [9 x M6]
Length [mm]	H	50
Reserve stroke axial [mm]	Q	2
Release stroke axial [mm]	R	2,5

Spindle nose	DU	A2-4	A2-5		A2-6			A2-8	
Total length [mm]	l	128		138	124	138	163	133	163
Outer Ø [mm]	AW	167						202	
Weight [kg]		12,9	12,3	13,3	11,3	12,5	14,8	15,8	19,1
In stock		✔	✔	✔	✔	✔	✔	✔	✔
Material no.		10000965	10000902	10000903	10000904	10000905	10000906	10000907	10000908

Spindle nose	DU	AP110	AP120	AP140	AP170		AP220
Total length [mm]	l	125	129	138	110	128	111
Outer Ø [mm]	AW	167			180		230
Weight [kg]		12,6		13,3	11,4	13,5	17
In stock		✔	✔	✔	✔	✔	✔
Material no.		10000949	10000963	10000909	10000954	10000930	10000964


Clamping heads
Page 430


Adaptations I.D. clamping
Page 308


Accessory overview
Page 478

SPANNTOP mini pull-back size 80. Technical data

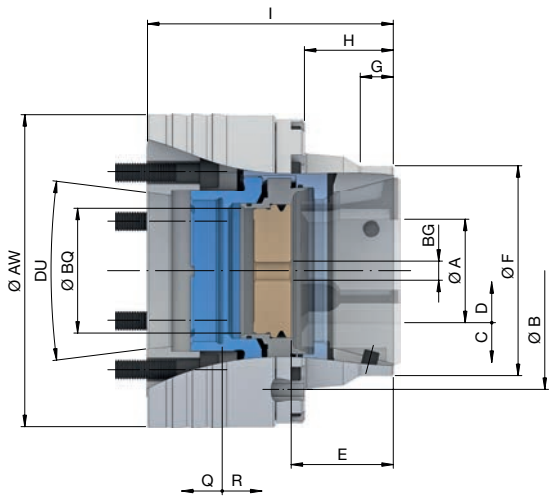

Size		80
Variant		**Pull-back**
Run-out ≤ [mm]		0,010
Max. radial clamping force [kN]		115
Max. axial drawtube force [pull / push] [kN]		50
RPM n max. [1/min.]		5500
Clamping range [mm]	A	4 – 80
Release stroke in Ø [mm]	C	0,6
Reserve stroke in Ø [mm]	D	1
Range / recommended workpiece tolerance [mm]		± 0,5
End-stop depth [mm]	E	54
Ø Capacity [mm]	BQ	82
End-stop thread size [M]	BG	12
Location front end-stop	F	Ø 126 f7
Centering length [mm]	G	18
Bolt hole circle end-stop	B	LK Ø 156 [3 x M8]
Length [mm]	H	47
Reserve stroke axial [mm]	Q	2
Release stroke axial [mm]	R	2,5

Spindle nose	DU	A2-5	A2-6			A2-8		
Total length [mm]	I	**132**	**128**	**135**	**155**	**132**	**150**	**180**
Outer Ø [mm]	AW	171				204		
Weight [kg]		12,8	11,8	12,4	14,2	15,4	17,6	21,1
In stock		✔	✔	✔	✔	✔	✔	✔
Material no.		10000892	10000871	10000872	10000873	10000874	10000875	10000876

Spindle nose	DU	AP140	AP170
Total length [mm]	I	**132**	**115**
Outer Ø [mm]	AW	171	180
Weight [kg]		13	11,5
In stock		✔	✔
Material no.		10000900	10000877


Clamping heads
Page 430


Adaptations I.D. clamping
Page 270


Adaptations jaw clamping
Page 316


Face driver / morse taper
Page 324


Magnet module
Page 332


Accessory overview
Page 478

SPANNTOP mini deadlength size 80. Technical data

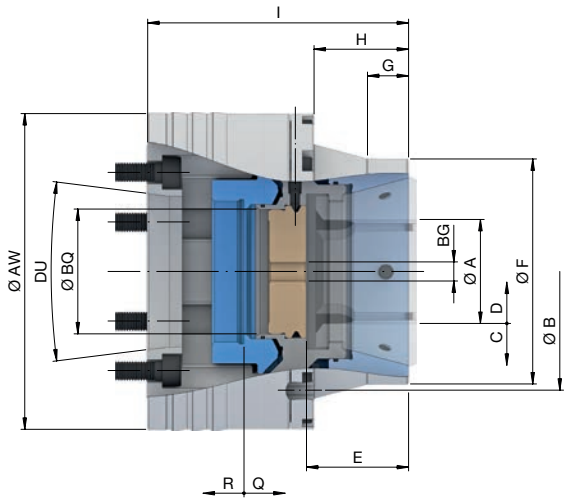

Size		80
Variant		**Deadlength**
Run-out ≤ [mm]		0,020
Max. radial clamping force [kN]		115
Max. axial compression force [kN]		50
RPM n max. [1/min.]		5500
Clamping range [mm]	A	4 – 80
Release stroke in Ø [mm]	C	0,6
Reserve stroke in Ø [mm]	D	1
Range / recommended workpiece tolerance [mm]		± 0,5
End-stop depth [mm]	E	55
Ø Capacity [mm]	BQ	82
End-stop thread size [M]	BG	12
Location front end-stop	F	Ø 136 f7
Centering length [mm]	G	22
Bolt hole circle end-stop	B	LK Ø 160,5 [9 x M6]
Length [mm]	H	51
Reserve stroke axial [mm]	Q	2
Release stroke axial [mm]	R	2,5

Spindle nose	DU	A2-5	A2-6			A2-8		
Total length [mm]	I	136	130	137	157	132	152	182
Outer Ø [mm]	AW	180				205		
Weight [kg]		15,4	13,9	14,6	16,7	16,9	19,2	22,8
In stock		✔	✔	✔	✔	✔	✔	✔
Material no.		10000945	10000931	10000932	10000933	10000934	10000935	10000936

Spindle nose	DU	AP140	AP170
Total length [mm]	I	134	115
Outer Ø [mm]	AW	180	
Weight [kg]		15,4	12,2
In stock		✔	✔
Material no.		10000937	10000946


Clamping heads
Page 430


Adaptations I.D. clamping
Page 308


Accessory overview
Page 478

SPANNTOP mini pull-back size 100. Technical data

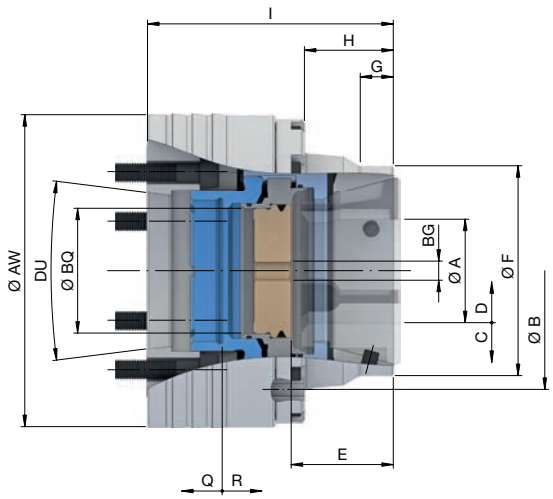

Size		100
Variant		**Pull-back**
Run-out ≤ [mm]		0,015
Max. radial clamping force [kN]		150
Max. axial drawtube force [pull / push] [kN]		65
RPM n max. [1/min.]		5000
Clamping range [mm]	A	15 – 100
Release stroke in Ø [mm]	C	2
Reserve stroke in Ø [mm]	D	1,5
Range / recommended workpiece tolerance [mm]		± 1,0
End-stop depth [mm]	E	72
Ø Capacity [mm]	BQ	102
End-stop thread size [M]	BG	12
Location front end-stop	F	Ø 160 f7
Centering length [mm]	G	20
Bolt hole circle end-stop	B	LK Ø 198 [3 x M8]
Length [mm]	H	64
Reserve stroke axial [mm]	Q	3
Release stroke axial [mm]	R	5

Spindle nose	DU	A2-5	A2-6		A2-8		A2-11	
Total length [mm]	I	**160**	**164**	**170**	**162**	**180**		**195**
Outer Ø [mm]	AW	221					280	
Weight [kg]		24,8	25,3	26,2	23,1	25,3	40,7	44,9
In stock		✔	✔	✔	✔	✔	✔	✔
Material no.		10000893	10000879	10000880	10000881	10000882	10000883	10000884

Spindle nose	DU	AP140	AP170	AP220
Total length [mm]	I	**161**	**164**	**150**
Outer Ø [mm]	AW	221		230
Weight [kg]		26	25,6	23,7
In stock		✔	✔	✔
Material no.		10000899	10000885	10000886

 Clamping heads Page 430	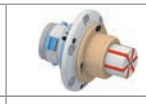 Adaptations I.D. clamping Page 270	 Adaptations jaw clamping Page 316	 Face driver / morse taper Page 324	 Magnet module Page 332	 Clamping head adapter Page 513	 Accessory overview Page 478

SPANNTOP mini deadlength size 100. Technical data

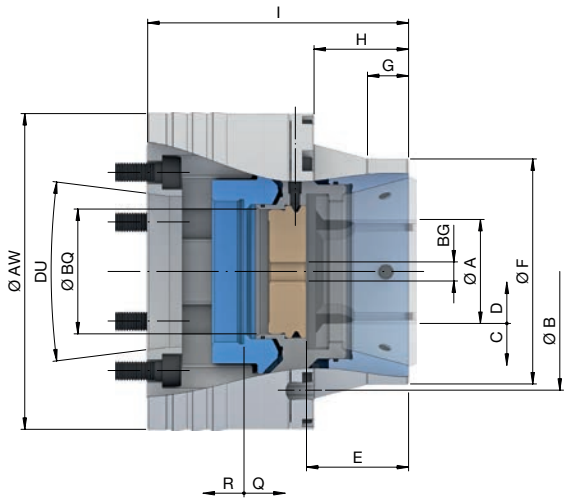

Size		100
Variant		**Deadlength**
Run-out ≤ [mm]		0,025
Max. radial clamping force [kN]		150
Max. axial compression force [kN]		65
RPM n max. [1/min.]		5000
Clamping range [mm]	A	15 – 100
Release stroke in Ø [mm]	C	2
Reserve stroke in Ø [mm]	D	1,5
Range / recommended workpiece tolerance [mm]		± 1,0
End-stop depth [mm]	E	74
Ø Capacity [mm]	BQ	102
End-stop thread size [M]	BG	12
Location front end-stop	F	Ø 168 f7
Centering length [mm]	G	22
Bolt hole circle end-stop	B	LK Ø 208 [3 x M6]
Length [mm]	H	64
Reserve stroke axial [mm]	Q	3
Release stroke axial [mm]	R	5

Spindle nose	DU	A2-5	A2-6		A2-8		A2-11	
Total length [mm]	I	171	175	182	169	192	185	200
Outer Ø [mm]	AW	221						276
Weight [kg]		28,6	29	30,2	26,4	29,8	39,6	42,6
In stock		✔	✔	✔	✔	✔	✔	✔
Material no.		10000959	10000938	10000939	10000940	10000941	10000960	10000961

Spindle nose	DU	AP140	AP170	AP220
Total length [mm]	I	171	175	162
Outer Ø [mm]	AW	221		230
Weight [kg]		29,6	29,4	27,1
In stock		✔	✔	✔
Material no.		10000962	10000942	10000943


Clamping heads
Page 430


Clamping head adapter
Page 513


Accessory overview
Page 478

SPANNTOP

The original, that wrote workholding history

HAINBUCH SYSTEM



SPANNTOP nova – this development represents more than 30 years of SPANNTOP experience. It exploits all the advantages of the latest machine tools. The components are optimized for balance quality, and have an extended guide length. The clamping length of the workpieces is also significantly greater. This chuck is designed for maximum RPM and holding power at ideal run-out accuracy. It is extremely rigid, precise, and has an extremely long life.

The position-oriented base end-stop of the »combi pull-back« and »combi deadlength« variants can be conveniently changed from the outside via three clamping screws countersunk in the chuck, and for standard chucks, provides excellent accuracy for face location combined with through-bore capacity.

SPANNTOP nova: reliable and solid. The product is the result of more than 30 years of experience!

Key advantages

- Ideal for customers with existing RD clamping heads
- Typical features of all HAINBUCH power chucks, such as high holding power, parallel clamping with high accuracy and easy set-up
- Minimal inertia loss compared to 3-jaw chucks

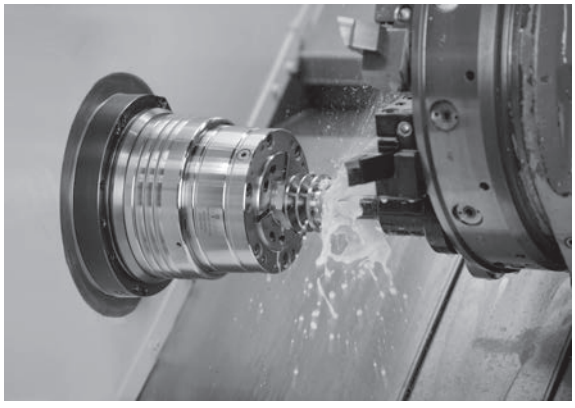

SPANNTOP nova combi pull-back chuck in use

SPANNTOP nova chuck types

	SPANNTOP nova combi pull-back	SPANNTOP nova combi deadlength	SPANNTOP nova modular
			
Description	Workpiece clamping with pull-back effect. Chuck with dismountable end-stop plate. Without end-stop plate ideal for machining pipes and bars.	Workpiece clamping without pull-back effect. Chuck with dismountable end-stop plate. It is also frequently used on the sub spindle.	Through-bore chuck only – ideal for machining pipes and bars.
Advantages	■ Workpiece stabilization through axial draw force applied against the workpiece end-stop ■ Prepared for inside and front end-stop ■ Converts to a fully functional »bar chuck« when the end-stop plate is removed	■ Workpiece clamping without axial movement of the clamping head ■ Clamps workpieces with a short collar or shoulder ■ Suitable for pick-off without pull-back effect ■ Prepared for inside and front end-stop ■ Converts to a fully functional »bar chuck« when the end-stop plate is removed	■ Fully-functional bar chuck ■ Due to pull-back effect signi-ficantly more rigid clamping is achieved than by conventional collets ■ Higher RPM and metal removal rates for bar work
Clamping elements	 Clamping head RD	 Clamping head RD	 Clamping head RD
Adaptations	 MANDO Adapt T211 RD [Mandrel-in-clamping-device, with draw bolt]  MANDO Adapt T212 RD [Mandrel-in-clamping-device, without draw bolt]  Jaw module RD [Adaptation for jaw clamping]  Face driver RD / Morse taper adapter RD [Adaptation for clamping between centers]  Magnet module RD [Adaptation for magnetic clamping]	 MANDO Adapt T812 RD [Mandrel-in-clamping-device, without draw bolt]	 MANDO Adapt T211 RD [Mandrel-in-clamping-device, with draw bolt]  MANDO Adapt T212 RD [Mandrel-in-clamping-device, without draw bolt]  Jaw module RD [Adaptation for jaw clamping]  Face driver RD / Morse taper adapter RD [Adaptation for clamping between centers]  Magnet module RD [Adaptation for magnetic clamping]

SPANNTOP nova combi pull-back in detail

Designation	
1 Vulcanized clamping head with hardened steel segments and pull-back 2 Mounting threads for front end-stop 3 Torsional safety lock of the clamping head 4 Clamping screw for base end-stop, easy mounting through external actuation 5 Spindle flange 6 Full through-bore after removing the base end-stop plate 7 Mounting thread for drawtube connection 8 Fixed base end-stop for clamping with pull-back effect, central mounting thread for workpiece specific end-stop	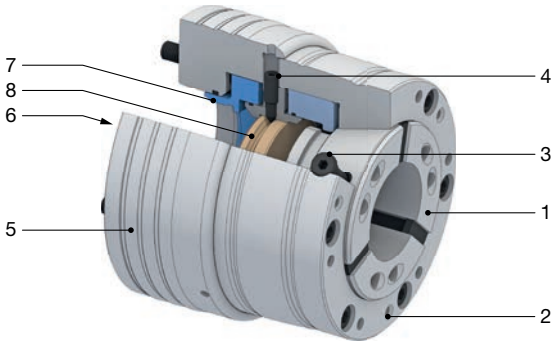

SPANNTOP nova combi deadlength in detail

Designation	
1 Vulcanized clamping head with hardened steel segments 2 Mounting threads for front end-stop 3 Torsional safety lock of the clamping head 4 Clamping screw for base end-stop, easy mounting through external actuation 5 Spindle flange 6 Full through-bore after removing the base end-stop plate 7 Mounting thread for drawtube connection 8 Fixed base end-stop with central mounting thread for workpiece specific end-stop 9 Central grease nipple, optimum tool life and holding power due to perfect lubrication	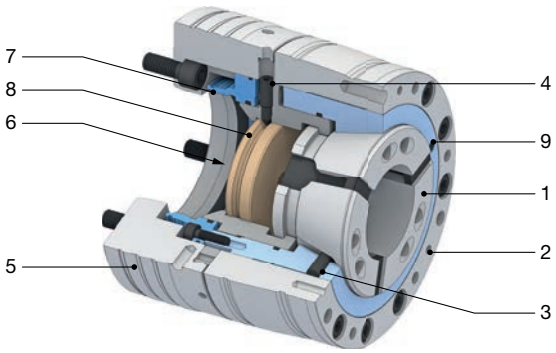

SPANNTOP nova modular in detail

Designation	
1 Vulcanized clamping head with hardened steel segments and pull-back 2 Mounting threads for front end-stop 3 Torsional safety lock of the clamping head 4 Spindle flange 5 Full chuck passage for bar work 6 Mounting thread for drawtube connection 7 Mounting thread for guide rings, introduction, spring ejectors, etc.	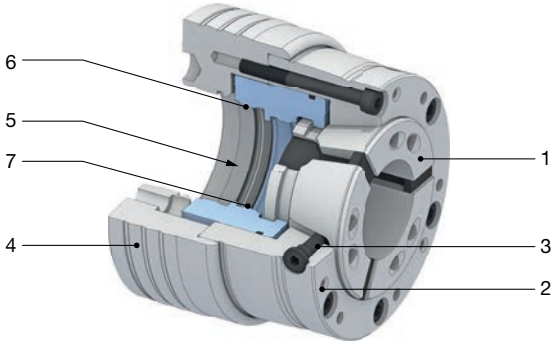

Order overview. SPANNTOP nova chuck

Size	Variant	Spindle nose	Material no.	In stock	Clamping elements and adaptations						
											
					Clamping head RD Page 430	MANDO Adapt T211 RD Page 290	MANDO Adapt T212 RD Page 296	MANDO Adapt T812 RD Page 308	Jaw module RD Page 316	Face driver / morse taper adapter RD Page 324	Magnet module RD Page 332
32	Combi pull-back	A2-4	10001768	-	✔						
		A2-5	10001769	-							
	Combi deadlength	A2-4	10001810	-							
		A2-5	10001811	-							
	Modular	A2-4	10001739	-							
		A2-5	10001740	-							
42	Combi pull-back	A2-4	10001792	-	✔	✔	✔			✔	
		A2-5	10001770	-							
		A2-6	10001771	-							
		AP120	10001781	-							
		AP140	10001782	-							
	Combi deadlength	A2-5	10001812	-	✔			✔			
		A2-6	10001813	-							
		AP140	10001823	-							
	Modular	A2-5	10001741	-	✔	✔	✔			✔	
		A2-6	10001742	-							
		AP120	10001751	-							
		AP140	10001752	-							
52	Combi pull-back	A2-5	10001772	-	✔	✔	✔			✔	✔
		A2-6	10001773	-							
		AP120	10001783	-							
		AP140	10001784	-							
	Combi deadlength	A2-5	10001814	-	✔			✔			
		A2-6	10001815	-							
		AP120	10001830	-							
		AP140	10001824	-							
	Modular	A2-5	10001743	-	✔	✔	✔			✔	✔
		A2-6	10001744	-							
		AP120	10001753	-							
		AP140	10001754	-							
65	Combi pull-back	A2-5	10001774	-	✔	✔	✔		✔	✔	✔
		A2-6	10001775	-							
		A2-8	10001776	-							
		AP120	10001785	-							
		AP140	10001786	-							
		AP170	10001787	-							

Detailed technical data follows.

For more connection data please visit www.hainbuch.com

Order overview. SPANNTOP nova chuck

Size	Variant	Spindle nose	Material no.	In stock	Clamping elements and adaptations						
											
					Clamping head RD Page 430	MANDO Adapt T211 RD Page 290	MANDO Adapt T212 RD Page 296	MANDO Adapt T812 RD Page 308	Jaw module RD Page 316	Face driver / morse taper adapter RD Page 324	Magnet module RD Page 332
65	Combi deadlength	A2-5	10001816	-	✔			✔			
		A2-6	10001817	-							
		A2-8	10001818	-							
		AP140	10001825	-							
		AP170	10001826	-							
	Modular	A2-5	10001745	-	✔	✔	✔		✔	✔	✔
		A2-6	10001746	-							
		A2-8	10001747	-							
		AP120	10001755	-							
		AP140	10001756	-							
		AP170	10001757	-							
80	Combi pull-back	A2-5	10001803	-	✔	✔	✔		✔	✔	✔
		A2-6	10001777	-							
		A2-8	10001778	-							
		AP170	10001788	-							
		AP220	10001789	-							
	Combi deadlength	A2-6	10001819	-	✔			✔			
		A2-8	10001820	-							
		AP140	10001827	-							
	Modular	A2-6	10001748	-	✔	✔	✔		✔	✔	✔
		A2-8	10001749	-							
		AP220	10001758	-							
100	Combi pull-back	A2-6	10001779	-	✔	✔	✔		✔	✔	✔
		A2-8	10001780	-							
		A2-11	10001793	-							
		AP170	10001790	-							
		AP220	10001791	-							
	Combi deadlength	A2-6	10001821	-	✔						
		A2-8	10001822	-							
		A2-11	10001837	-							
		AP170	10001828	-							
		AP220	10001829	-							
	Modular	A2-8	10001750	-	✔	✔	✔		✔	✔	✔
		A2-11	10001761	-							
		AP170	10001759	-							
		AP220	10001760	-							

Detailed technical data follows.

For more connection data please visit www.hainbuch.com

Order overview. SPANNTOP nova chuck

Size	Variant	Spindle nose	Material no.	In stock	Clamping elements and adaptations						
											
					Clamping head RD Page 430	MANDO Adapt T211 RD Page 290	MANDO Adapt T212 RD Page 296	MANDO Adapt T812 RD Page 308	Jaw module RD Page 316	Face driver / morse taper adapter RD Page 324	Magnet module RD Page 332
125	Combi pull-back	A2-6	10001804	✔	✔		✔				
		A2-8	10001805	✔							
		A2-11	10001806	✔							
		AP170	10001807	✔							
		AP220	10001808	✔							
	Combi deadlength	A2-6	10001832	✔	✔						
		A2-8	10001833	✔							
		A2-11	10001834	✔							
		AP170	10001835	✔							
		AP220	10001836	✔							
	Modular	A2-6	10001763	✔	✔		✔				
		A2-8	10001764	✔							
		A2-11	10001765	✔							
		AP170	10001766	✔							
		AP220	10001767	✔							
160	Combi pull-back	A2-6	10014974	✔	✔						
		A2-8	10014977	✔							
		A2-11	10014978	✔							
		AP170	10014979	✔							
		AP220	10014980	✔							

Detailed technical data follows.

For more connection data please visit www.hainbuch.com

Scope of delivery

- Chuck
- Base end-stop [depending on the variant]

SPANNTOP nova combi pull-back size 32. Technical data

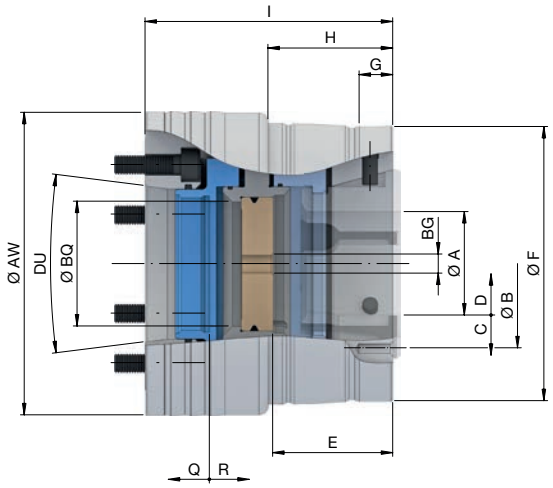

Size		32	
Variant		**Combi pull-back**	
Spindle nose	DU	A2-4	A2-5
Run-out ≤ [mm]		0,010	
Max. radial clamping force [kN]		70	
Max. axial drawtube force [pull / push] [kN]		25	
RPM n max. [1/min.]		8000	
Clamping range [mm]	A	3 – 32	
Release stroke in Ø [mm]	C	0,6	
Reserve stroke in Ø [mm]	D	1	
Range / recommended workpiece tolerance [mm]		± 0,3	
End-stop depth [mm]	E	52,5	
Ø Capacity [mm]	BQ	33	
End-stop thread size [M]	BG	10	
Location front end-stop	F	Ø 75 f7	
Centering length [mm]	G	14	
Bolt hole circle end-stop	B	LK Ø 67 [3 x M4]	
Length [mm]	H	55	
Total length [mm]	I	117	
Reserve stroke axial [mm]	Q	2,5	
Release stroke axial [mm]	R	3	
Outer Ø [mm]	AW	115	135
Weight [kg]		6	7
In stock		-	-
Material no.		10001768	10001769

Machine spindle standard DIN 55026.
Total length can be extended via flange.


Clamping heads
Page 430


Accessory overview
Page 478

SPANNTOP nova combi deadlength size 32. Technical data

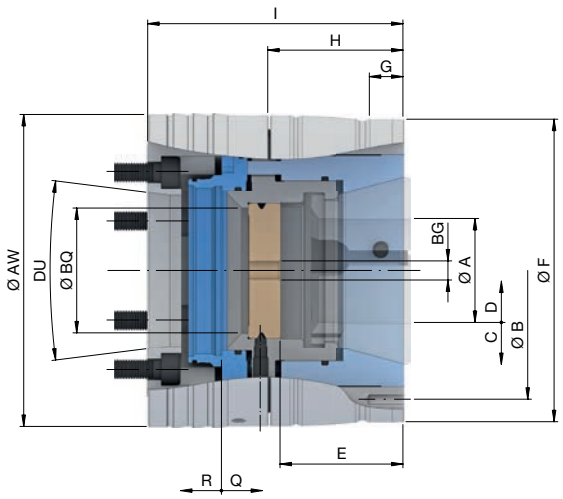

Size		32	
Variant		**Combi deadlength**	
Spindle nose	DU	A2-4	A2-5
Run-out ≤ [mm]		0,020	
Max. radial clamping force [kN]		70	
Max. axial compression force [kN]		25	
RPM n max. [1/min.]		8000	
Clamping range [mm]	A	3 – 32	
Release stroke in Ø [mm]	C	0,6	
Reserve stroke in Ø [mm]	D	1	
Range / recommended workpiece tolerance [mm]		± 0,3	
End-stop depth [mm]	E	53,5	
Ø Capacity [mm]	BQ	33	
End-stop thread size [M]	BG	10	
Location front end-stop	F	Ø 100 f7	
Centering length [mm]	G	10	
Bolt hole circle end-stop	B	LK Ø 92,5 [3 x M4]	
Length [mm]	H	60	
Total length [mm]	I	120	
Reserve stroke axial [mm]	Q	2,5	
Release stroke axial [mm]	R	3	
Outer Ø [mm]	AW	145	
Weight [kg]		10	
In stock		-	-
Material no.		10001810	10001811

Machine spindle standard DIN 55026.
Total length can be extended via flange.


Clamping heads
Page 430


Accessory overview
Page 478

SPANNTOP nova modular size 32. Technical data

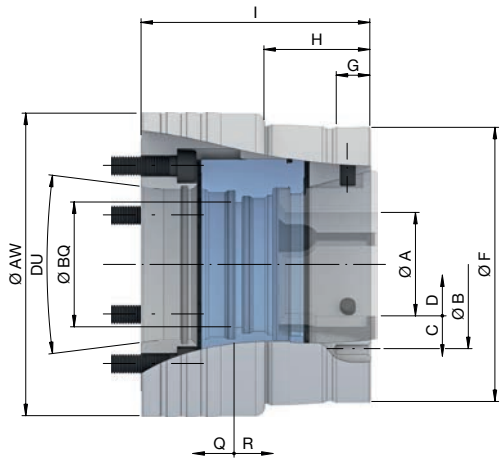

Size		32	
Variant		**Modular**	
Spindle nose	DU	A2-4	A2-5
Run-out ≤ [mm]		0,010	
Max. radial clamping force [kN]		70	
Max. axial drawtube force [pull / push] [kN]		25	
RPM n max. [1/min.]		8000	
Clamping range [mm]	A	3 – 32	
Release stroke in Ø [mm]	C	0,6	
Reserve stroke in Ø [mm]	D	1	
Range / recommended workpiece tolerance [mm]		± 0,3	
Ø Capacity [mm]	BQ	34	
Location front end-stop	F	Ø 75 f7	
Centering length [mm]	G	14	
Bolt hole circle end-stop	B	LK Ø 67 [3 x M4]	
Length [mm]	H	45	
Total length [mm]	I	107	
Reserve stroke axial [mm]	Q	2,5	
Release stroke axial [mm]	R	3	
Outer Ø [mm]	AW	115	135
Weight [kg]		5	6
In stock		-	-
Material no.		10001739	10001740

Machine spindle standard DIN 55026.
Total length can be extended via flange.


Clamping heads
Page 430


Accessory overview
Page 478

SPANNTOP nova combi pull-back size 42. Technical data

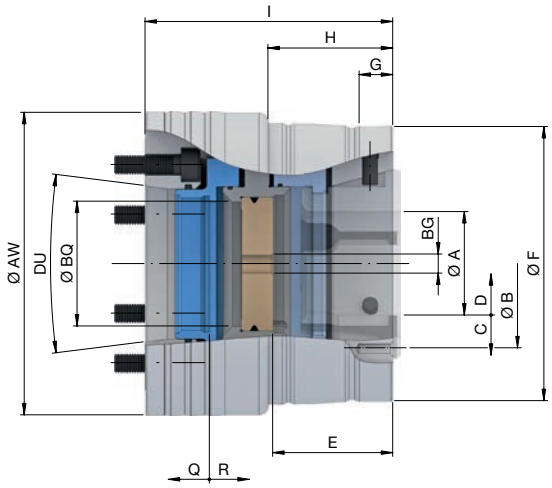

Size		42				
Variant		**Combi pull-back**				
Spindle nose	DU	A2-4	A2-5	A2-6	AP120	AP140
Run-out ≤ [mm]		0,010				
Max. radial clamping force [kN]		80				
Max. axial drawtube force [pull / push] [kN]		35				
RPM n max. [1/min.]		7000				
Clamping range [mm]	A	3 – 42				
Release stroke in Ø [mm]	C	0,6				
Reserve stroke in Ø [mm]	D	1				
Range / recommended workpiece tolerance [mm]		± 0,5				
End-stop depth [mm]	E	56,5				
Ø Capacity [mm]	BQ	43				
End-stop thread size [M]	BG	10				
Location front end-stop	F	Ø 125 f7				
Centering length [mm]	G	17				
Bolt hole circle end-stop	B	LK Ø 107 [3 x M6]				
Length [mm]	H	59				
Total length [mm]	I	122			115	
Reserve stroke axial [mm]	Q	2				
Release stroke axial [mm]	R	2,5				
Outer Ø [mm]	AW	144		165	144	150
Weight [kg]		11	10	12	10	11
In stock		-	-	-	-	-
Material no.		10001792	10001770	10001771	10001781	10001782

Machine spindle standard DIN 55026.
Total length can be extended via flange.

			
Clamping heads Page 430	Adaptations I.D. clamping Page 270	Face driver / morse taper Page 324	Accessory overview Page 478

SPANNTOP nova combi deadlength size 42. Technical data

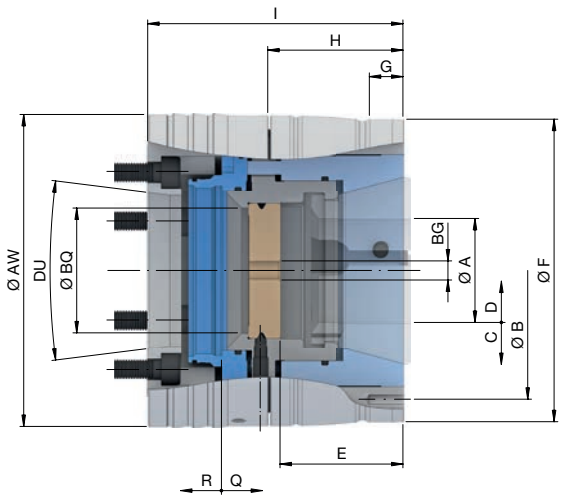

Size		42		
Variant		**Combi deadlength**		
Spindle nose	DU	A2-5	A2-6	AP140
Run-out ≤ [mm]		0,020		
Max. radial clamping force [kN]		80		
Max. axial compression force [kN]		35		
RPM n max. [1/min.]		7000		
Clamping range [mm]	A	3 – 42		
Release stroke in Ø [mm]	C	0,6		
Reserve stroke in Ø [mm]	D	1		
Range / recommended workpiece tolerance [mm]		± 0,5		
End-stop depth [mm]	E	54,8		
Ø Capacity [mm]	BQ	43		
End-stop thread size [M]	BG	10		
Location front end-stop	F	Ø 140 f7		
Centering length [mm]	G	17		
Bolt hole circle end-stop	B	LK Ø 122 [3 x M6]		
Length [mm]	H	61,5		
Total length [mm]	I	120		110
Reserve stroke axial [mm]	Q	2		
Release stroke axial [mm]	R	2,5		
Outer Ø [mm]	AW	145	162	150
Weight [kg]		13,5		14
In stock		-	-	-
Material no.		10001812	10001813	10001823

Machine spindle standard DIN 55026.
Total length can be extended via flange.


Clamping heads
Page 430


Adaptations I.D. clamping
Page 308


Accessory overview
Page 478

SPANNTOP nova modular size 42. Technical data

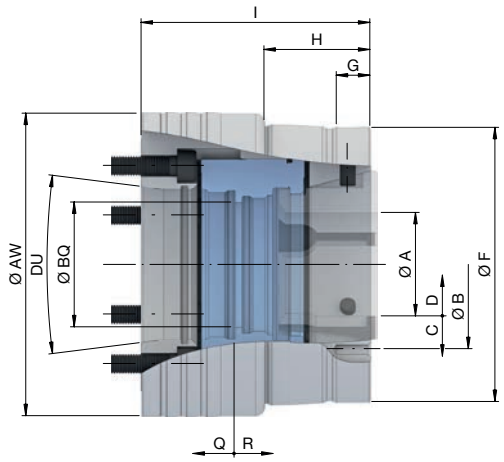

Size		42			
Variant		**Modular**			
Spindle nose	DU	A2-5	A2-6	AP120	AP140
Run-out ≤ [mm]		0,010			
Max. radial clamping force [kN]		80			
Max. axial drawtube force [pull / push] [kN]		35			
RPM n max. [1/min.]		7000			
Clamping range [mm]	A	3 – 42			
Release stroke in Ø [mm]	C	0,6			
Reserve stroke in Ø [mm]	D	1			
Range / recommended workpiece tolerance [mm]		± 0,5			
Ø Capacity [mm]	BQ	45			
Location front end-stop	F	Ø 125 f7			
Centering length [mm]	G	17			
Bolt hole circle end-stop	B	LK Ø 107 [3 x M6]			
Length [mm]	H	49			
Total length [mm]	I	112		105	
Reserve stroke axial [mm]	Q	2			
Release stroke axial [mm]	R	2,5			
Outer Ø [mm]	AW	144	165	144	150
Weight [kg]		9	11	9	
In stock		-	-	-	-
Material no.		10001741	10001742	10001751	10001752

Machine spindle standard DIN 55026.
Total length can be extended via flange.


Clamping heads
Page 430


Adaptations I.D. clamping
Page 270


Face driver / morse taper
Page 324


Accessory overview
Page 478

SPANNTOP nova combi pull-back size 52. Technical data

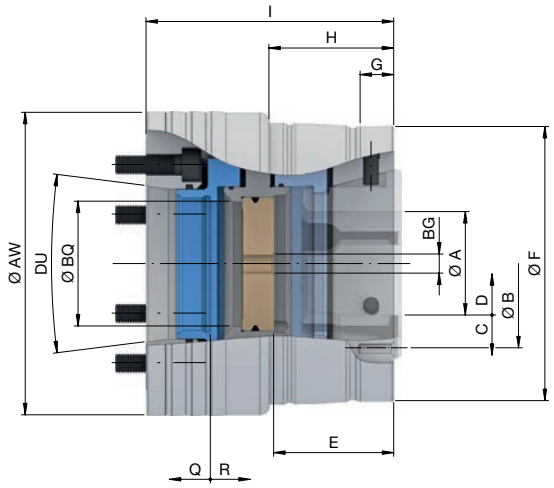

Size		52			
Variant		**Combi pull-back**			
Spindle nose	DU	A2-5	A2-6	AP120	AP140
Run-out ≤ [mm]		0,010			
Max. radial clamping force [kN]		94			
Max. axial drawtube force [pull / push] [kN]		40			
RPM n max. [1/min.]		7000			
Clamping range [mm]	A	3 – 52			
Release stroke in Ø [mm]	C	0,6			
Reserve stroke in Ø [mm]	D	1			
Range / recommended workpiece tolerance [mm]		± 0,5			
End-stop depth [mm]	E	56,5			
Ø Capacity [mm]	BQ	53			
End-stop thread size [M]	BG	10			
Location front end-stop	F	Ø 125 f7			
Centering length [mm]	G	17			
Bolt hole circle end-stop	B	LK Ø 107 [3 x M6]			
Length [mm]	H	59			
Total length [mm]	I	122		115	
Reserve stroke axial [mm]	Q	2			
Release stroke axial [mm]	R	2,5			
Outer Ø [mm]	AW	144	165	144	150
Weight [kg]		10	12	10	
In stock		-	-	-	-
Material no.		10001772	10001773	10001783	10001784

Machine spindle standard DIN 55026.
Total length can be extended via flange.

				
Clamping heads Page 430	Adaptations I.D. clamping Page 270	Face driver / morse taper Page 324	Magnet module Page 332	Accessory overview Page 478

SPANNTOP nova combi deadlength size 52. Technical data

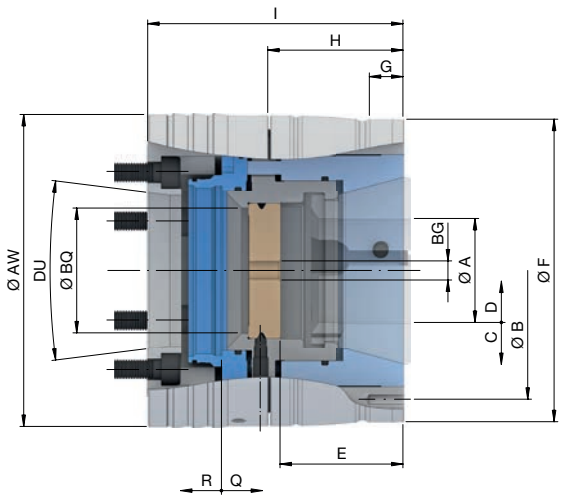

Size		52			
Variant		**Combi deadlength**			
Spindle nose	DU	A2-5	A2-6	AP120	AP140
Run-out ≤ [mm]		0,020			
Max. radial clamping force [kN]		94			
Max. axial compression force [kN]		40			
RPM n max. [1/min.]		7000			
Clamping range [mm]	A	3 – 52			
Release stroke in Ø [mm]	C	0,6			
Reserve stroke in Ø [mm]	D	1			
Range / recommended workpiece tolerance [mm]		± 0,5			
End-stop depth [mm]	E	54,8			
Ø Capacity [mm]	BQ	53			
End-stop thread size [M]	BG	10			
Location front end-stop	F	Ø 140 f7			
Centering length [mm]	G	17	13	20	
Bolt hole circle end-stop	B	LK Ø 122 [3 x M6]			
Length [mm]	H	61,5			
Total length [mm]	I	120		110	
Reserve stroke axial [mm]	Q	2			
Release stroke axial [mm]	R	2,5			
Outer Ø [mm]	AW	145	162	145	150
Weight [kg]		13		13,5	
In stock		-	-	-	-
Material no.		10001814	10001815	10001830	10001824

Machine spindle standard DIN 55026.
Total length can be extended via flange.


Clamping heads
Page 430


Adaptations I.D. clamping
Page 308


Accessory overview
Page 478

SPANNTOP nova modular size 52. Technical data

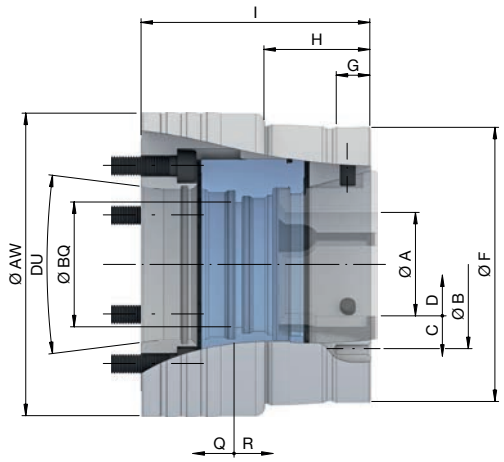

Size		52			
Variant		**Modular**			
Spindle nose	DU	A2-5	A2-6	AP120	AP140
Run-out ≤ [mm]		0,010			
Max. radial clamping force [kN]		94			
Max. axial drawtube force [pull / push] [kN]		40			
RPM n max. [1/min.]		7000			
Clamping range [mm]	A	3 – 52			
Release stroke in Ø [mm]	C	0,6			
Reserve stroke in Ø [mm]	D	1			
Range / recommended workpiece tolerance [mm]		± 0,5			
Ø Capacity [mm]	BQ	53			
Location front end-stop	F	Ø 125 f7			
Centering length [mm]	G	17			
Bolt hole circle end-stop	B	LK Ø 107 [3 x M6]			
Length [mm]	H	49			
Total length [mm]	I	112		105	
Reserve stroke axial [mm]	Q	2			
Release stroke axial [mm]	R	2,5			
Outer Ø [mm]	AW	144	165	144	150
Weight [kg]		9	11	9	
In stock		-	-	-	-
Material no.		10001743	10001744	10001753	10001754

Machine spindle standard DIN 55026.
Total length can be extended via flange.


Clamping heads
Page 430


Adaptations I.D. clamping
Page 270


Face driver / morse taper
Page 324


Magnet module
Page 332


Accessory overview
Page 478

SPANNTOP nova combi pull-back size 65. Technical data

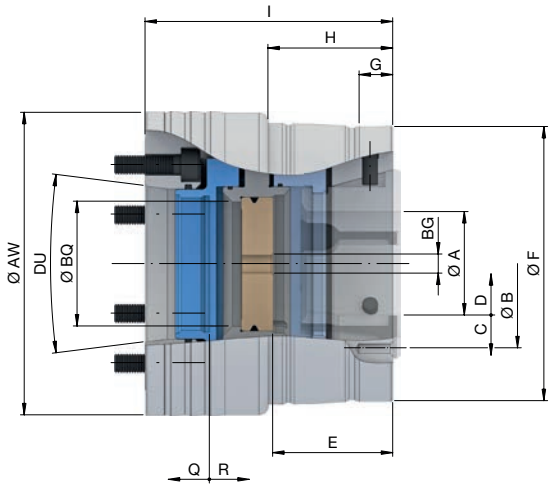

Size		65					
Variant		**Combi pull-back**					
Spindle nose	DU	A2-5	A2-6	A2-8	AP120	AP140	AP170
Run-out ≤ [mm]		0,010					
Max. radial clamping force [kN]		105					
Max. axial drawtube force [pull / push] [kN]		45					
RPM n max. [1/min.]		6000					
Clamping range [mm]	A	3 – 65					
Release stroke in Ø [mm]	C	0,6					
Reserve stroke in Ø [mm]	D	1					
Range / recommended workpiece tolerance [mm]		± 0,5					
End-stop depth [mm]	E	63,5					
Ø Capacity [mm]	BQ	66					
End-stop thread size [M]	BG	12					
Location front end-stop	F	Ø 145 f7					
Centering length [mm]	G	17					
Bolt hole circle end-stop	B	LK Ø 126 [3 x M6]					
Length [mm]	H	66					
Total length [mm]	I	131	130	131	120		115
Reserve stroke axial [mm]	Q	2					
Release stroke axial [mm]	R	2,5					
Outer Ø [mm]	AW	160	165	210	160		184
Weight [kg]		13,5	13	18,5	12,5		14
In stock		-	-	-	-	-	-
Material no.		10001774	10001775	10001776	10001785	10001786	10001787

Machine spindle standard DIN 55026.
Total length can be extended via flange.



Clamping heads	Adaptations I.D. clamping	Adaptations jaw clamping	Face driver / morse taper	Magnet module	Accessory overview
Page 430	Page 270	Page 316	Page 324	Page 332	Page 478

SPANNTOP nova combi deadlength size 65. Technical data

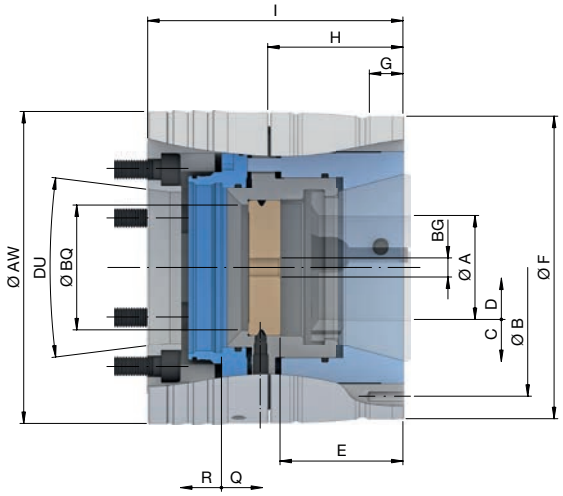

Size		65				
Variant		**Combi deadlength**				
Spindle nose	DU	A2-5	A2-6	A2-8	AP140	AP170
Run-out ≤ [mm]		0,020				
Max. radial clamping force [kN]		105				
Max. axial compression force [kN]		45				
RPM n max. [1/min.]		6000				
Clamping range [mm]	A	3 – 65				
Release stroke in Ø [mm]	C	0,6				
Reserve stroke in Ø [mm]	D	1				
Range / recommended workpiece tolerance [mm]		± 0,5				
End-stop depth [mm]	E	65				
Ø Capacity [mm]	BQ	66				
End-stop thread size [M]	BG	12				
Location front end-stop	F	Ø 160 f7				
Centering length [mm]	G	17				
Bolt hole circle end-stop	B	LK Ø 141 [3 x M6]				
Length [mm]	H	71,5				
Total length [mm]	I	135				125
Reserve stroke axial [mm]	Q	2				
Release stroke axial [mm]	R	2,5				
Outer Ø [mm]	AW	165		210	165	180
Weight [kg]		15,5	15	20	16	20
In stock		-	-	-	-	-
Material no.		10001816	10001817	10001818	10001825	10001826

Machine spindle standard DIN 55026.
Total length can be extended via flange.


Clamping heads
Page 430


Adaptations I.D. clamping
Page 308


Accessory overview
Page 478

SPANNTOP nova modular size 65. Technical data

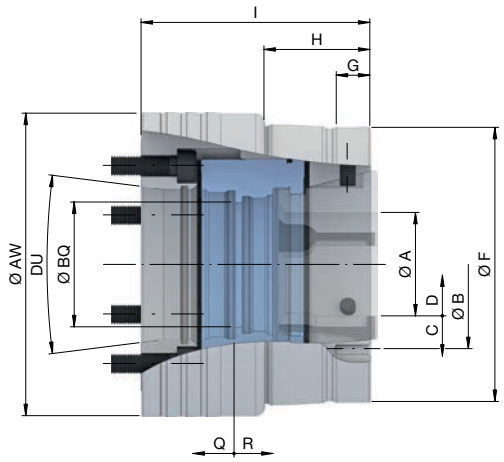

Size		65					
Variant		Modular					
Spindle nose	DU	A2-5	A2-6	A2-8	AP120	AP140	AP170
Run-out ≤ [mm]		0,010					
Max. radial clamping force [kN]		105					
Max. axial drawtube force [pull / push] [kN]		45					
RPM n max. [1/min.]		6000					
Clamping range [mm]	A	3 – 65					
Release stroke in Ø [mm]	C	0,6					
Reserve stroke in Ø [mm]	D	1					
Range / recommended workpiece tolerance [mm]		± 0,5					
Ø Capacity [mm]	BQ	66					
Location front end-stop	F	Ø 145 f7					
Centering length [mm]	G	17					
Bolt hole circle end-stop	B	LK Ø 126 [3 x M6]					
Length [mm]	H	56					
Total length [mm]	I	121	120	121	110		105
Reserve stroke axial [mm]	Q	2					
Release stroke axial [mm]	R	2,5					
Outer Ø [mm]	AW	160	165	210	160		184
Weight [kg]		12	17		11		12,5
In stock		-	-	-	-	-	-
Material no.		10001745	10001746	10001747	10001755	10001756	10001757

Machine spindle standard DIN 55026.
Total length can be extended via flange.

 Clamping heads Page 430	 Adaptations I.D. clamping Page 270	 Adaptations jaw clamping Page 316	 Face driver / morse taper Page 324	 Magnet module Page 332	 Accessory overview Page 478

SPANNTOP nova combi pull-back size 80. Technical data

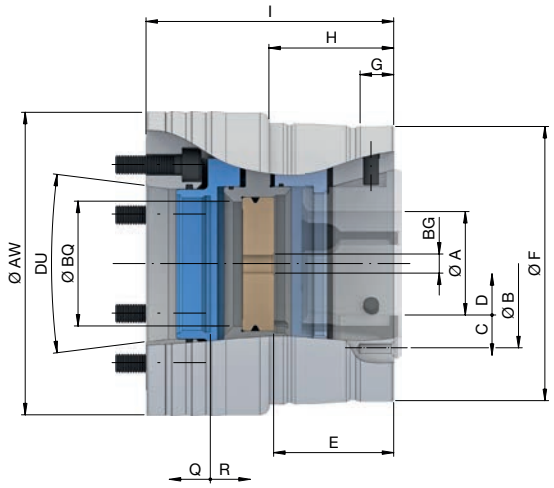

Size		80				
Variant		**Combi pull-back**				
Spindle nose	DU	A2-5	A2-6	A2-8	AP170	AP220
Run-out ≤ [mm]		0,010				
Max. radial clamping force [kN]		115				
Max. axial drawtube force [pull / push] [kN]		50				
RPM n max. [1/min.]		5500				
Clamping range [mm]	A	4 – 80				
Release stroke in Ø [mm]	C	0,6				
Reserve stroke in Ø [mm]	D	1				
Range / recommended workpiece tolerance [mm]		± 0,5				
End-stop depth [mm]	E	63,5				
Ø Capacity [mm]	BQ	81				
End-stop thread size [M]	BG	12				
Location front end-stop	F	Ø 160 f7				
Centering length [mm]	G	17				
Bolt hole circle end-stop	B	LK Ø 139 [3 x M6]				
Length [mm]	H	66				
Total length [mm]	I	134	135	140	135	148
Reserve stroke axial [mm]	Q	2				
Release stroke axial [mm]	R	2,5				
Outer Ø [mm]	AW	180		210	180	235
Weight [kg]		17	16	21	17	
In stock		-	-	-	-	-
Material no.		10001803	10001777	10001778	10001788	10001789

Machine spindle standard DIN 55026.
Total length can be extended via flange.

					
Clamping heads Page 430	Adaptations I.D. clamping Page 270	Adaptations jaw clamping Page 316	Face driver / morse taper Page 324	Magnet module Page 332	Accessory overview Page 478

SPANNTOP nova combi deadlength size 80. Technical data

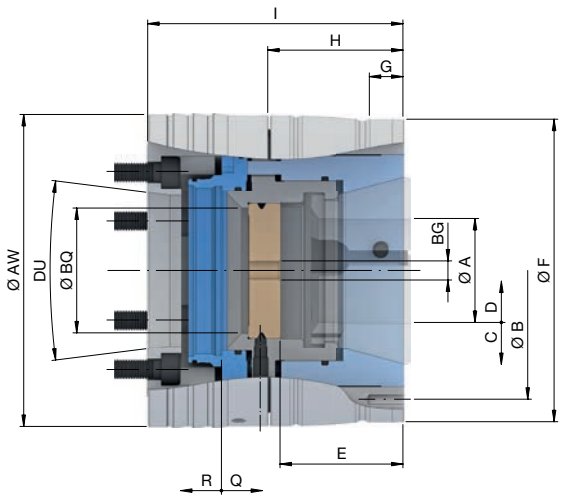

Size		80		
Variant		**Combi deadlength**		
Spindle nose	DU	A2-6	A2-8	AP140
Run-out ≤ [mm]		0,020		
Max. radial clamping force [kN]		115		
Max. axial compression force [kN]		50		
RPM n max. [1/min.]		5500		
Clamping range [mm]	A	4 – 80		
Release stroke in Ø [mm]	C	0,6		
Reserve stroke in Ø [mm]	D	1		
Range / recommended workpiece tolerance [mm]		± 0,5		
End-stop depth [mm]	E	65		
Ø Capacity [mm]	BQ	81		
End-stop thread size [M]	BG	12		
Location front end-stop	F	Ø 175 f7		
Centering length [mm]	G	17		
Bolt hole circle end-stop	B	LK Ø 156 [3 x M6]		
Length [mm]	H	71,5		
Total length [mm]	I	145		
Reserve stroke axial [mm]	Q	2		
Release stroke axial [mm]	R	2,5		
Outer Ø [mm]	AW	179	210	179
Weight [kg]		19	23	20
In stock		-	-	-
Material no.		10001819	10001820	10001827

Machine spindle standard DIN 55026.
Total length can be extended via flange.


Clamping heads
Page 430


Adaptations I.D. clamping
Page 308


Accessory overview
Page 478

SPANNTOP nova modular size 80. Technical data

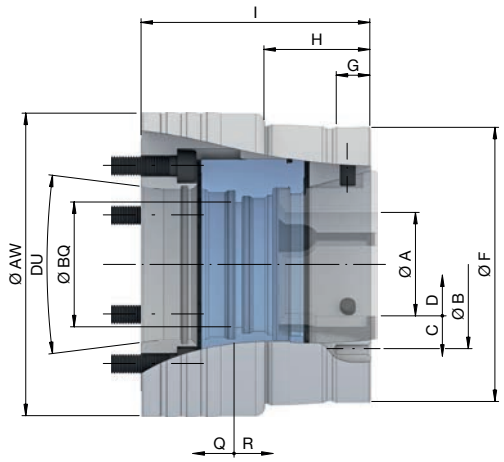

Size		**80**		
Variant		**Modular**		
Spindle nose	DU	A2-6	A2-8	AP220
Run-out ≤ [mm]		0,010		
Max. radial clamping force [kN]		115		
Max. axial drawtube force [pull / push] [kN]		50		
RPM n max. [1/min.]		5500		
Clamping range [mm]	A	4 – 80		
Release stroke in Ø [mm]	C	0,6		
Reserve stroke in Ø [mm]	D	1		
Range / recommended workpiece tolerance [mm]		± 0,5		
Ø Capacity [mm]	BQ	81		
Location front end-stop	F	Ø 160 f7		
Centering length [mm]	G	17		
Bolt hole circle end-stop	B	LK Ø 139 [3 x M6]		
Length [mm]	H	56		
Total length [mm]	I	125	130	138
Reserve stroke axial [mm]	Q	2		
Release stroke axial [mm]	R	2,5		
Outer Ø [mm]	AW	180	210	235
Weight [kg]		14	19	27
In stock		-	-	-
Material no.		10001748	10001749	10001758

Machine spindle standard DIN 55026.
Total length can be extended via flange.

					
Clamping heads Page 430	Adaptations I.D. clamping Page 270	Adaptations jaw clamping Page 316	Face driver / morse taper Page 324	Magnet module Page 332	Accessory overview Page 478

SPANNTOP nova combi pull-back size 100. Technical data

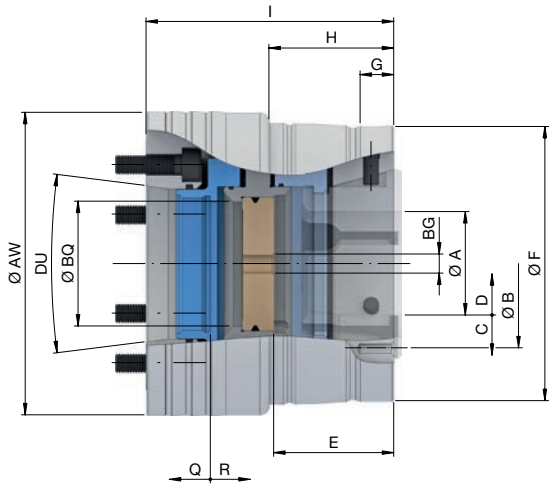

Size		100				
Variant		**Combi pull-back**				
Spindle nose	DU	A2-6	A2-8	A2-11	AP170	AP220
Run-out ≤ [mm]		0,015				
Max. radial clamping force [kN]		150				
Max. axial drawtube force [pull / push] [kN]		65				
RPM n max. [1/min.]		5000				
Clamping range [mm]	A	15 – 100				
Release stroke in Ø [mm]	C	2				
Reserve stroke in Ø [mm]	D	1,5				
Range / recommended workpiece tolerance [mm]		± 1,0				
End-stop depth [mm]	E	73				
Ø Capacity [mm]	BQ	101				
End-stop thread size [M]	BG	12				
Location front end-stop	F	Ø 215 f7				
Centering length [mm]	G	20				
Bolt hole circle end-stop	B	LK Ø 180 [3 x M8]				
Length [mm]	H	78,5				
Total length [mm]	I	155	159	165	159	
Reserve stroke axial [mm]	Q	3				
Release stroke axial [mm]	R	5				
Outer Ø [mm]	AW	235		280	235	240
Weight [kg]		33,5	33	43	35	
In stock		-	-	-	-	-
Material no.		10001779	10001780	10001793	10001790	10001791

Machine spindle standard DIN 55026.
Total length can be extended via flange.

 Clamping heads Page 430	 Adaptations I.D. clamping Page 270	 Adaptations jaw clamping Page 316	 Face driver / morse taper Page 324	 Magnet module Page 332	 Clamping head adapter Page 513	 Accessory overview Page 478

SPANNTOP nova combi deadlength size 100. Technical data

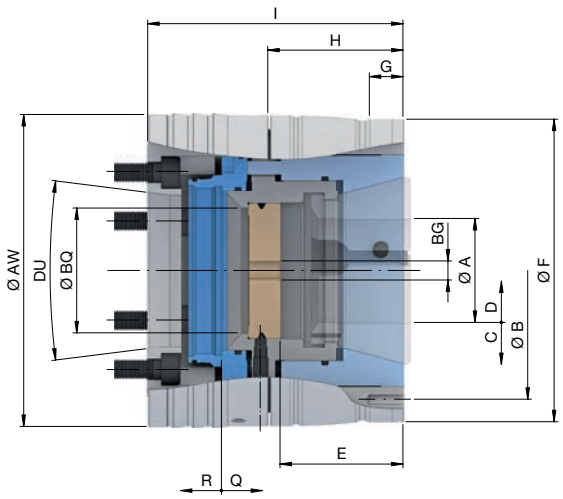

Size		100				
Variant		Combi deadlength				
Spindle nose	DU	A2-6	A2-8	A2-11	AP170	AP220
Run-out ≤ [mm]		0,025				
Max. radial clamping force [kN]		150				
Max. axial compression force [kN]		65				
RPM n max. [1/min.]		5000				
Clamping range [mm]	A	15 – 100				
Release stroke in Ø [mm]	C	2				
Reserve stroke in Ø [mm]	D	1,5				
Range / recommended workpiece tolerance [mm]		± 1,0				
End-stop depth [mm]	E	85,5				
Ø Capacity [mm]	BQ	84	101			
End-stop thread size [M]	BG	12				
Location front end-stop	F	Ø 215 f7				
Centering length [mm]	G	20		22	20	
Bolt hole circle end-stop	B	LK Ø 192 [3 x M8]				
Length [mm]	H	94				
Total length [mm]	I	175			180	170
Reserve stroke axial [mm]	Q	3				
Release stroke axial [mm]	R	5				
Outer Ø [mm]	AW	220		280	220	240
Weight [kg]		35	34	46	37	38
In stock		-	-	-	-	-
Material no.		10001821	10001822	10001837	10001828	10001829

Machine spindle standard DIN 55026.
Total length can be extended via flange.


Clamping heads
Page 430


Clamping head adapter
Page 513


Accessory overview
Page 478

SPANNTOP nova modular size 100. Technical data

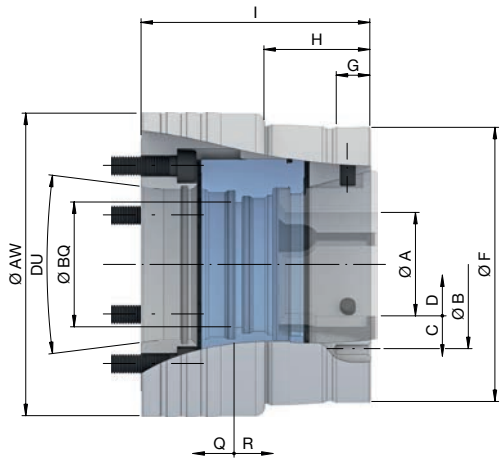

Size		100			
Variant		Modular			
Spindle nose	DU	A2-8	A2-11	AP170	AP220
Run-out ≤ [mm]		0,015			
Max. radial clamping force [kN]		150			
Max. axial drawtube force [pull / push] [kN]		65			
RPM n max. [1/min.]		5000			
Clamping range [mm]	A	15 – 100			
Release stroke in Ø [mm]	C	2			
Reserve stroke in Ø [mm]	D	1,5			
Range / recommended workpiece tolerance [mm]		± 1,0			
Ø Capacity [mm]	BQ	104,5			
Location front end-stop	F	Ø 215 f7			
Centering length [mm]	G	20			
Bolt hole circle end-stop	B	LK Ø 180 [3 x M8]			
Length [mm]	H	68,5			
Total length [mm]	I	149	155	149	
Reserve stroke axial [mm]	Q	3			
Release stroke axial [mm]	R	5			
Outer Ø [mm]	AW	235	280	235	240
Weight [kg]		29	39	32	31
In stock		-	-	-	-
Material no.		10001750	10001761	10001759	10001760

Machine spindle standard DIN 55026.
Total length can be extended via flange.

 Clamping heads Page 430	 Adaptations I.D. clamping Page 270	 Adaptations jaw clamping Page 316	 Face driver / morse taper Page 324	 Magnet module Page 332	 Clamping head adapter Page 513	 Accessory overview Page 478

SPANNTOP nova combi pull-back size 125. Technical data

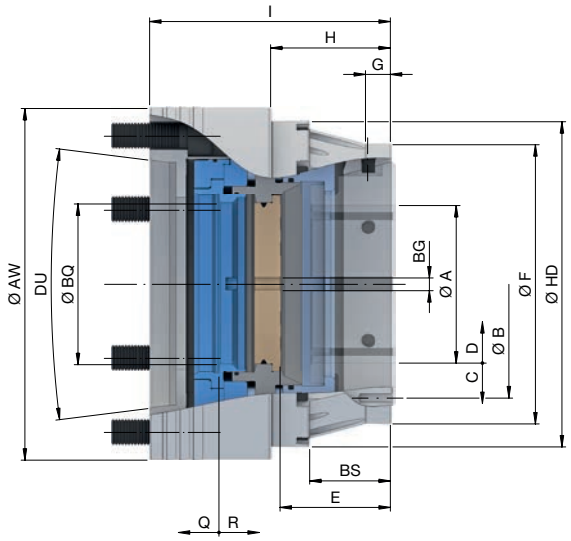

Size		125				
Variant		**Combi pull-back**				
Spindle nose	DU	A2-6	A2-8	A2-11	AP170	AP220
Run-out ≤ [mm]		0,020				
Max. radial clamping force [kN]		165				
Max. axial drawtube force [pull / push] [kN]		70				
RPM n max. [1/min.]		3200				
Clamping range [mm]	A	25 – 125				
Release stroke in Ø [mm]	C	2,5				
Reserve stroke in Ø [mm]	D	2,5				
Range / recommended workpiece tolerance [mm]		± 1,0				
End-stop depth [mm]	E	87,5				
Ø Capacity [mm]	BQ	127,5				
End-stop thread size [M]	BG	12				
Location front end-stop	F	Ø 221,5 f7				
Centering length [mm]	G	20				
Bolt hole circle end-stop	B	LK Ø 208,5 [6 x M8]				
Length [mm]	H	95				
Length 2 [mm]	BS	64				
Total length [mm]	I		191		185	190
Reserve stroke axial [mm]	Q	5				
Release stroke axial [mm]	R	6				
Outer Ø [mm]	AW	270		280	270	
Outer Ø 2 [mm]	HD	258				
Weight [kg]		50	48	46	49	47
In stock		✔	✔	✔	✔	✔
Material no.		10001804	10001805	10001806	10001807	10001808

Machine spindle standard DIN 55026.
Total length can be extended via flange.


Clamping heads
Page 430


Adaptations I.D. clamping
Page 270


Clamping head adapter
Page 513


Accessory overview
Page 478

SPANNTOP nova combi deadlength size 125. Technical data

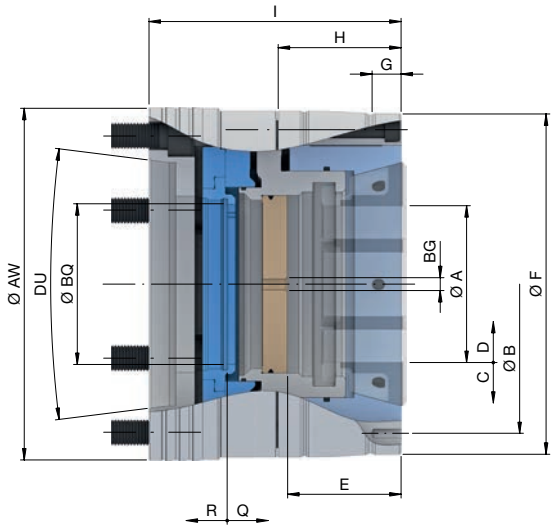

Size		125				
Variant		**Combi deadlength**				
Spindle nose	DU	A2-6	A2-8	A2-11	AP170	AP220
Run-out ≤ [mm]		0,030				
Max. radial clamping force [kN]		165				
Max. axial compression force [kN]		70				
RPM n max. [1/min.]		3200				
Clamping range [mm]	A	25 – 125				
Release stroke in Ø [mm]	C	2,5				
Reserve stroke in Ø [mm]	D	2,5				
Range / recommended workpiece tolerance [mm]		± 1,0				
End-stop depth [mm]	E	90				
Ø Capacity [mm]	BQ	127,5				
End-stop thread size [M]	BG	12				
Location front end-stop	F	Ø 270 f7				
Centering length [mm]	G	22				
Bolt hole circle end-stop	B	LK Ø 245 [3 x M8]				
Length [mm]	H	97,5				
Total length [mm]	I	190	200		185	190
Reserve stroke axial [mm]	Q	5				
Release stroke axial [mm]	R	6				
Outer Ø [mm]	AW	275				
Weight [kg]		61	63	61	62	
In stock		✔	✔	✔	✔	✔
Material no.		10001832	10001833	10001834	10001835	10001836

Machine spindle standard DIN 55026.
Total length can be extended via flange.

		
Clamping heads Page 430	Clamping head adapter Page 513	Accessory overview Page 478

SPANNTOP nova modular size 125. Technical data

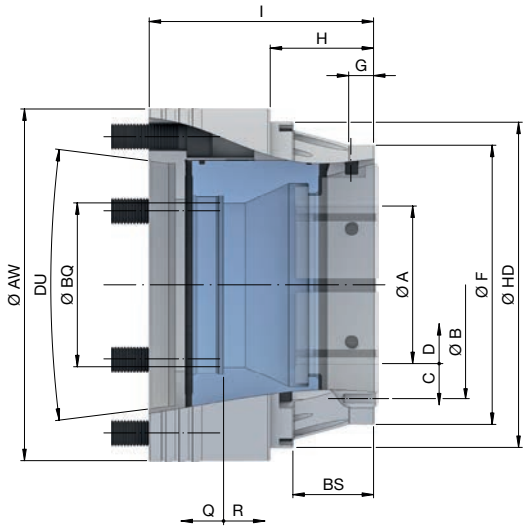

Size		125				
Variant		**Modular**				
Spindle nose	DU	A2-6	A2-8	A2-11	AP170	AP220
Run-out ≤ [mm]		0,020				
Max. radial clamping force [kN]		165				
Max. axial drawtube force [pull / push] [kN]		70				
RPM n max. [1/min.]		3200				
Clamping range [mm]	A	25 – 125				
Release stroke in Ø [mm]	C	2,5				
Reserve stroke in Ø [mm]	D	2,5				
Range / recommended workpiece tolerance [mm]		± 1,0				
Ø Capacity [mm]	BQ	130				
Location front end-stop	F	Ø 221,5 f7				
Centering length [mm]	G	20				
Bolt hole circle end-stop	B	LK Ø 208,5 [6 x M8]				
Length [mm]	H	82				
Length 2 [mm]	BS	64				
Total length [mm]	I	178				177
Reserve stroke axial [mm]	Q	5				
Release stroke axial [mm]	R	6				
Outer Ø [mm]	AW	270		280	270	
Outer Ø 2 [mm]	HD	258				
Weight [kg]		44	43		44	43
In stock		✔	✔	✔	✔	✔
Material no.		10001763	10001764	10001765	10001766	10001767

Machine spindle standard DIN 55026.
Total length can be extended via flange.

			
Clamping heads Page 430	Adaptations I.D. clamping Page 270	Clamping head adapter Page 513	Accessory overview Page 478

SPANNTOP nova combi pull-back size 160. Technical data

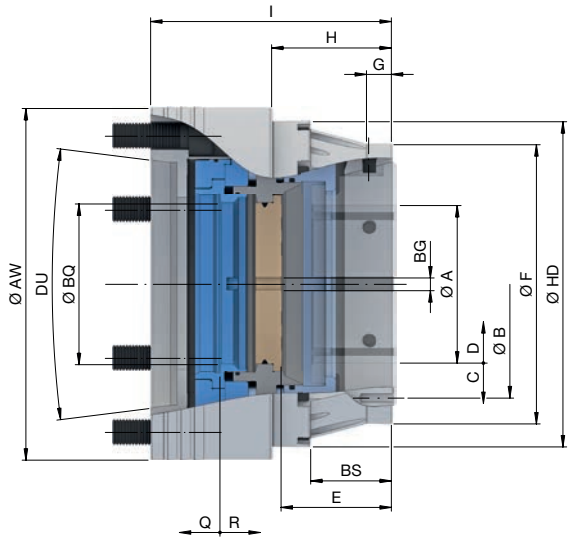

Size		160				
Variant		**Combi pull-back**				
Spindle nose	DU	A2-6	A2-8	A2-11	AP170	AP220
Run-out ≤ [mm]		0,025				
Max. radial clamping force [kN]		235				
Max. axial drawtube force [pull / push] [kN]		100				
RPM n max. [1/min.]		3200				
Clamping range [mm]	A	27 – 160				
Release stroke in Ø [mm]	C	1,3				
Reserve stroke in Ø [mm]	D	1,5				
Range / recommended workpiece tolerance [mm]		± 1,0				
End-stop depth [mm]	E	89,5				
Ø Capacity [mm]	BQ	162				
End-stop thread size [M]	BG	12				
Location front end-stop	F	Ø 254 f7				
Centering length [mm]	G	20				
Bolt hole circle end-stop	B	LK Ø 240,5 [3 x M8]				
Length [mm]	H	95				
Length 2 [mm]	BS	64				
Total length [mm]	I	190	195	200	189	194
Reserve stroke axial [mm]	Q	3				
Release stroke axial [mm]	R	3				
Outer Ø [mm]	AW	302				
Outer Ø 2 [mm]	HD	290				
Weight [kg]		60	60,8	59	62	
In stock		✔	✔	✔	✔	✔
Material no.		10014974	10014977	10014978	10014979	10014980

Machine spindle standard DIN 55026.
Total length can be extended via flange.


Clamping heads
Page 430


Clamping head adapter
Page 513


Accessory overview
Page 478

SPANNTOP nova chuck

TOROK

Clamps gently or forcefully

HAINBUCH SYSTEM



The TOROK manual chuck is primarily used in tool prototyping on machines without a clamping cylinder. For example, thanks to its easy manual actuation, when used on grinding machines you can safely and delicately clamp. In combination with our clamping device adaptations, such as the MANDO Adapt mandrel-in-chuck or the jaw module, many more clamping options are possible.

And most recent: Thanks to the optional lightweight CFRP design, with the TOROK CFK you save one-third the weight. This is particularly set-up friendly and it offloads the machine spindle bearings.

Key advantages

- Also available in a CFRP lightweight design
- Manual actuation – a clamping cylinder is not required
- Sensitive clamping possible
- Workpiece stabilization through axial draw force applied against the workpiece end-stop
- Mandrels, jaw modules, face drivers, and morse taper adaptable



TOROK in use

TOROK manually actuated chuck types

	TOROK CFK	TOROK
		
Description	Manually actuated lightweight chuck	Manually actuated chuck
Sizes	52, 65	52, 65, 80, 100
Clamping range of all sizes [mm]	3 – 65	3 – 100
Variant	SE [hexagonal] / RD [round]	SE [hexagonal] / RD [round]
Advantages	■ Made of carbon fiber ■ 1/3 lighter than the standard model	
Clamping elements	 Clamping head SE  Clamping head RD	 Clamping head SE  Clamping head RD
Adaptations	 MANDO Adapt T211 SE / RD [Mandrel-in-clamping-device, with draw bolt]  MANDO Adapt T212 SE / RD [Mandrel-in-clamping-device, without draw bolt]  Jaw module SE / RD [Adaptation for jaw clamping]  Face driver / Morse taper adapter SE / RD [Adaptation for clamping between centers]  Magnet module SE / RD [Adaptation for magnetic clamping]	 MANDO Adapt T211 SE / RD [Mandrel-in-clamping-device, with draw bolt]  MANDO Adapt T212 SE / RD [Mandrel-in-clamping-device, without draw bolt]  Jaw module SE / RD [Adaptation for jaw clamping]  Face driver SE / Morse taper adapter SE / RD [Adaptation for clamping between centers]  Magnet module SE / RD [Adaptation for magnetic clamping]

TOROK CFK SE in detail

Designation	
1 Manual actuation via socket wrench 2 Chuck body made of carbon fiber 3 Clamping head with pull-back and hexagon geometry for optimum chuck sealing and improved clamping force 4 Mounting threads for front end-stop 5 Grease nipple, optimal holding power due to efficient lubrication 6 Fixed base end-stop for clamping with pull-back effect, central mounting thread for workpiece specific end-stop 7 Clamping screw for base end-stop, easy mounting through external actuation	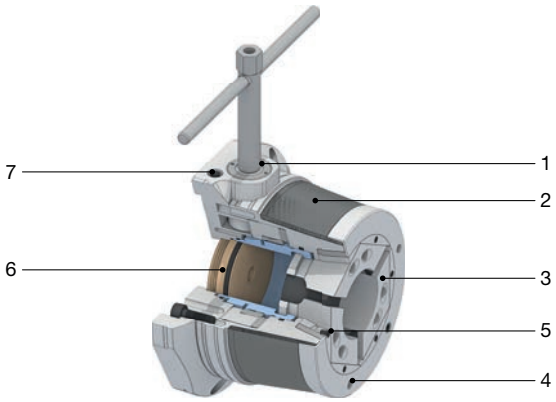

TOROK RD in detail

Designation	
1 Manual actuation via socket wrench 2 Vulcanized clamping head with hardened steel segments and pull-back 3 Mounting threads for front end-stop 4 Fixed base end-stop for clamping with pull-back effect, central mounting thread for workpiece specific end-stop 5 Clamping screw for base end-stop, easy mounting through external actuation	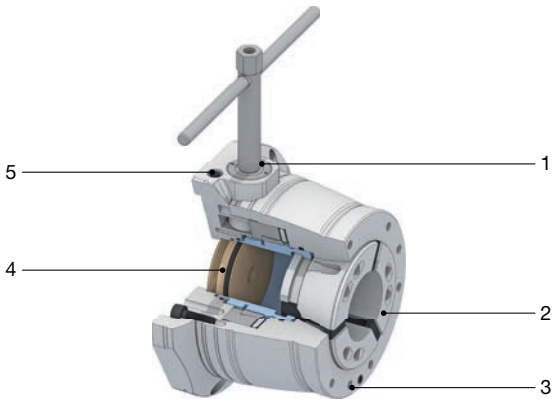

Order overview. TOROK CFK SE / RD

Product line	Size	Material no.	In stock	Clamping elements and adaptations					
									
				Clamping head SE Page 422	MANDO Adapt T211 SE Page 274	MANDO Adapt T212 SE Page 280	Jaw module SE Page 316	Face driver / morse taper adapter SE Page 324	Magnet module SE Page 332
SE	52	10000486	-	✔	✔	✔		✔	✔
	65	10000487	-	✔	✔	✔	✔	✔	✔
Product line	Size	Material no.	In stock	Clamping head RD Page 430	MANDO Adapt T211 RD Page 290	MANDO Adapt T212 RD Page 296	Jaw module RD Page 316	Face driver / morse taper adapter RD Page 324	Magnet module RD Page 332
RD	52	10000488	-	✔	✔	✔		✔	✔
	65	10000489	-	✔	✔	✔	✔	✔	✔

Detailed technical data follows.

Order overview. TOROK SE / RD

Product line	Size	Material no.	In stock	Clamping elements and adaptations					
									
				Clamping head SE Page 422	MANDO Adapt T211 SE Page 274	MANDO Adapt T212 SE Page 280	Jaw module SE Page 316	Face driver / morse taper adapter SE Page 324	Magnet module SE Page 332
SE	52	10000174	✔	✔	✔	✔		✔	✔
	65	10000175	✔	✔	✔	✔	✔	✔	✔
	100	10015275	✔	✔	✔	✔	✔	✔	✔
Product line	Size	Material no.	In stock	Clamping head RD Page 430	MANDO Adapt T211 RD Page 290	MANDO Adapt T212 RD Page 296	Jaw module RD Page 316	Face driver / morse taper adapter RD Page 324	Magnet module RD Page 332
RD	52	10000172	✔	✔	✔	✔		✔	✔
	65	10000173	✔	✔	✔	✔	✔	✔	✔
	80	10015262	✔	✔	✔	✔	✔	✔	✔
	100	10015263	✔	✔	✔	✔	✔	✔	✔

Detailed technical data follows.

Scope of delivery

- Chuck without spindle flange
- Base end-stop
- Actuation tool

TOROK CFK SE. Technical data

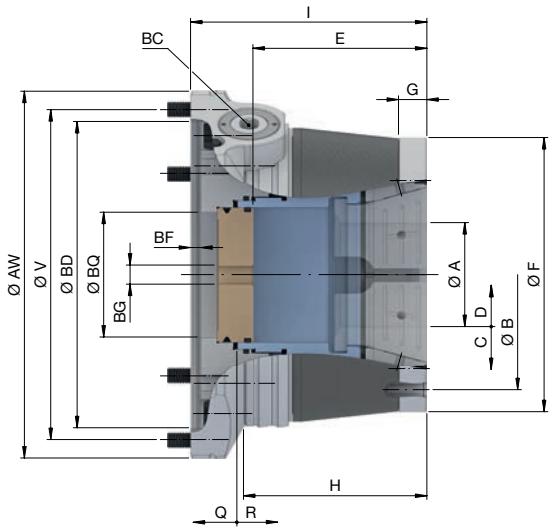

Product line		SE	
Size		**52**	**65**
Run-out ≤ [mm]		0,015	
Max. radial clamping force [kN]		108	120
Max. axial drawtube force [pull / push] [kN]		40	45
Flange location	BD	Ø 145 H7	Ø 162 H7
Flange fit length [mm]	BF	5,1	
Max. actuating torque [Nm]	BC	75	90
RPM n max. [1/min.]		7000	
Clamping range [mm]	A	3 – 52	3 – 65
Release stroke in Ø [mm]	C	0,6	
Reserve stroke in Ø [mm]	D	1	
Range / recommended workpiece tolerance [mm]		± 0,5	
End-stop depth [mm]	E	90	92
Ø Capacity [mm]	BQ	53	66
End-stop thread size [M]	BG	10	12
Location front end-stop	F	Ø 125 f7	Ø 145 f7
Length [mm]	H	92	97
Centering length [mm]	G	15	
Bolt hole circle end-stop	B	LK Ø 107 [3 x M6]	LK Ø 126 [3 x M6]
Total length [mm]	I	120	125
Reserve stroke axial [mm]	Q	2	
Release stroke axial [mm]	R	2,5	
Bolt hole circle	V	LK Ø 156 [6 x M8]	LK Ø 176 [6 x M8]
Outer Ø [mm]	AW	174	194
Weight [kg]		7	10,3
In stock		-	-
Material no.		10000486	10000487


Clamping heads
Page 422


Adaptations I.D. clamping
Page 270


Adaptations jaw clamping
Page 316


Face driver / morse taper
Page 324


Magnet module
Page 332


Flanges
Page 131


Accessory overview
Page 478

Manual chuck TOROK

TOROK SE. Technical data

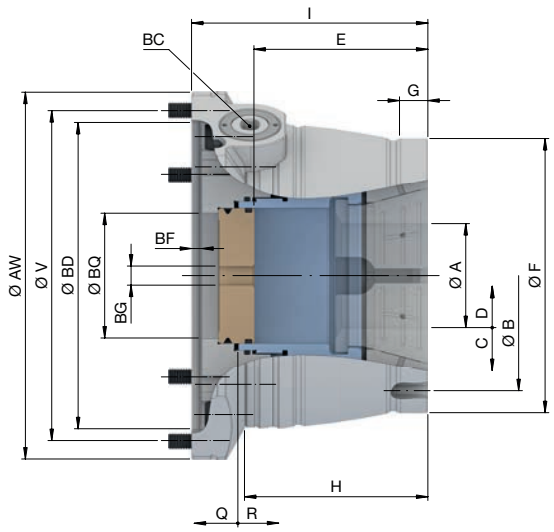

Product line		SE		
Size		**52**	**65**	**100**
Run-out ≤ [mm]		0,015		
Max. radial clamping force [kN]		108	120	150
Max. axial drawtube force [pull / push] [kN]		40	45	65
Flange location	BD	Ø 145 H7	Ø 162 H7	Ø 240 H6
Flange fit length [mm]	BF	5,1		5
Max. actuating torque [Nm]	BC	75	90	
RPM n max. [1/min.]		7000	6000	5000
Clamping range [mm]	A	3 – 52	3 – 65	15 – 100
Release stroke in Ø [mm]	C	0,6		2
Reserve stroke in Ø [mm]	D	2		1,5
Range / recommended workpiece tolerance [mm]		± 0,5		± 1,0
End-stop depth [mm]	E	90	92	
Ø Capacity [mm]	BQ	53	66	100
End-stop thread size [M]	BG	10	12	
Location front end-stop	F	Ø 125 f7	Ø 145 f7	Ø 195 f7
Length [mm]	H	92	97	67
Centering length [mm]	G	17	14	15
Bolt hole circle end-stop	B	LK Ø 107 [3 x M6]	LK Ø 126 [3 x M6]	LK Ø 180 [3 x M8]
Total length [mm]	I	120	125	130
Reserve stroke axial [mm]	Q	2		3,1
Release stroke axial [mm]	R	2,5		5
Bolt hole circle	V	LK Ø 156 [6 x M8]	LK Ø 176 [6 x M8]	LK Ø 235 [6 x M10]
Outer Ø [mm]	AW	174	194	260
Weight [kg]		12,6	15,2	32
In stock		✔	✔	✔
Material no.		10000174	10000175	10015275

The bolt hole circle does not have equal division.

 Clamping heads Page 422	 Adaptations I.D. clamping Page 270	 Adaptations jaw clamping Page 316	 Face driver / morse taper Page 324	 Magnet module Page 332	 Flanges Page 131	 Clamping head adapter Page 513	 Accessory overview Page 478

TOROK CFK RD. Technical data

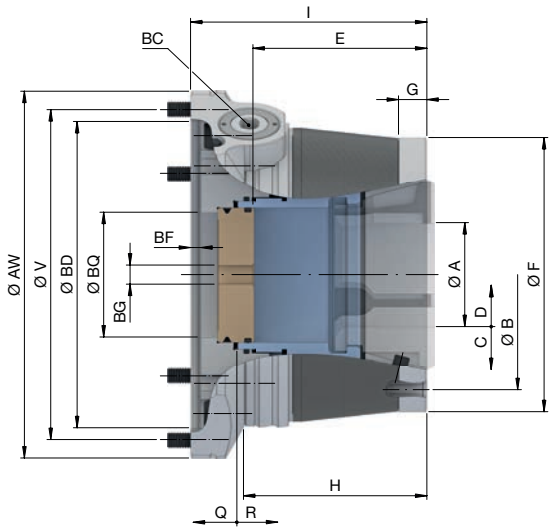

Product line		RD	
Size		**52**	**65**
Run-out ≤ [mm]		0,010	
Max. radial clamping force [kN]		94	105
Max. axial drawtube force [pull / push] [kN]		40	45
Flange location	BD	Ø 145 H7	Ø 162 H7
Flange fit length [mm]	BF	5,1	
Max. actuating torque [Nm]	BC	75	90
RPM n max. [1/min.]		7000	
Clamping range [mm]	A	3 – 52	3 – 65
Release stroke in Ø [mm]	C	0,6	
Reserve stroke in Ø [mm]	D	1	
Range / recommended workpiece tolerance [mm]		± 0,5	
End-stop depth [mm]	E	90	92
Ø Capacity [mm]	BQ	53	66
End-stop thread size [M]	BG	10	12
Location front end-stop	F	Ø 125 f7	Ø 145 f7
Length [mm]	H	92	97
Centering length [mm]	G	15	
Bolt hole circle end-stop	B	LK Ø 107 [3 x M6]	LK Ø 126 [3 x M6]
Total length [mm]	I	120	125
Reserve stroke axial [mm]	Q	2	
Release stroke axial [mm]	R	2,5	
Bolt hole circle	V	LK Ø 156 [6 x M8]	LK Ø 176 [6 x M8]
Outer Ø [mm]	AW	174	194
Weight [kg]		7,3	10,4
In stock		-	-
Material no.		10000488	10000489


Clamping heads
Page 430


Adaptations I.D. clamping
Page 270


Adaptations jaw clamping
Page 316


Face driver / morse taper
Page 324


Magnet module
Page 332


Flanges
Page 131


Accessory overview
Page 478

Manual chuck TOROK

TOROK RD. Technical data

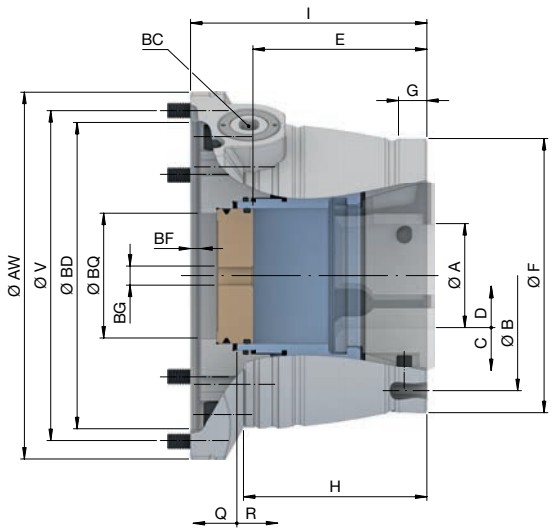

Product line		RD			
Size		**52**	**65**	**80**	**100**
Run-out ≤ [mm]		0,010		0,015	
Max. radial clamping force [kN]		94	105	115	150
Max. axial drawtube force [pull / push] [kN]		40	45	50	65
Flange location	BD	Ø 145 H7	Ø 162 H7	Ø 240 H6	
Flange fit length [mm]	BF	5,1		5	
Max. actuating torque [Nm]	BC	75	90	70	90
RPM n max. [1/min.]		7000	6000	5500	5000
Clamping range [mm]	A	3 – 52	3 – 65	4 – 80	15 – 100
Release stroke in Ø [mm]	C	0,6			2
Reserve stroke in Ø [mm]	D	1			1,5
Range / recommended workpiece tolerance [mm]		± 0,5			± 1,0
End-stop depth [mm]	E	90	92	90	92
Ø Capacity [mm]	BQ	53	66	80	100
End-stop thread size [M]	BG	10	12		
Location front end-stop	F	Ø 125 f7	Ø 145 f7	Ø 160 f7	Ø 195 f7
Length [mm]	H	92	97	57	67
Centering length [mm]	G	17	14	15	
Bolt hole circle end-stop	B	LK Ø 107 [3 x M6]	LK Ø 126 [3 x M6]	LK Ø 139 [3 x M6]	LK Ø 180 [3 x M8]
Total length [mm]	I	120	125		130
Reserve stroke axial [mm]	Q	2		2,1	3,1
Release stroke axial [mm]	R	2,5			5
Bolt hole circle	V	LK Ø 156 [6 x M8]	LK Ø 176 [6 x M8]	LK Ø 235 [6 x M10]	
Outer Ø [mm]	AW	174	194	260	
Weight [kg]		12,6	15,2	32	
In stock		✔	✔	✔	✔
Material no.		10000172	10000173	10015262	10015263

The bolt hole circle does not have equal division.

 Clamping heads Page 430	 Adaptations I.D. clamping Page 270	 Adaptations jaw clamping Page 316	 Face driver / morse taper Page 324	 Magnet module Page 332	 Flanges Page 131	 Clamping head adapter Page 513	 Accessory overview Page 478

Flanges. For TOROK and TOROK CFK

Size	Figure	Spindle nose DU	Length 2 [mm] BS	Interface X	Interface hole circle Y	Outer Ø [mm] AW	Bolt hole circle V	Variant	In stock	Material no.
52	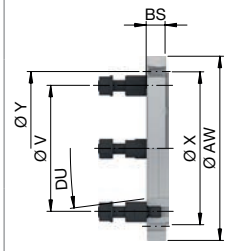	A2-5	20	Ø 145 g5	LK Ø 156 [6 x M8]	195	LK Ø 104,8 [4 x M10]	Adjustable bolt DIN ISO 702-3 M10x43	✔	10000220
		A2-6					LK Ø 133,4 [4 x M12]	Adjustable bolt DIN ISO 702-3 M12x50	✔	10000221
		A2-8				210	LK Ø 171,4 [4 x M16]	Adjustable bolt DIN ISO 702-3 M16x60	✔	10000222
65		A2-5	20	Ø 162 g5	LK Ø 176 [6 x M8]	195	LK Ø 104,8 [4 x M10]	Adjustable bolt DIN ISO 702-3 M10x43	✔	10000223
		A2-6					LK Ø 133,4 [4 x M12]	Adjustable bolt DIN ISO 702-3 M12x50	✔	10000224
		A2-8				210	LK Ø 171,4 [4 x M16]	Adjustable bolt DIN ISO 702-3 M16x60	✔	10000225
80/100		A2-5	26,5	Ø 240 g5	LK Ø 235 [6 x M10]	260	LK Ø 104,8 [4 x M10]	Adjustable bolt DIN ISO 702-3 M10x43	✔	10015276
		A2-6	20				LK Ø 133,4 [4 x M12]	Adjustable bolt DIN ISO 702-3 M12x50	✔	10015277
		A2-8	26,5				LK Ø 171,4 [4 x M16]	Adjustable bolt DIN ISO 702-3 M16x60	✔	10015278

Camlock flange [DIN 55029] on request.

TOROK base plate for stationary use e.g. on a machining center. Technical data

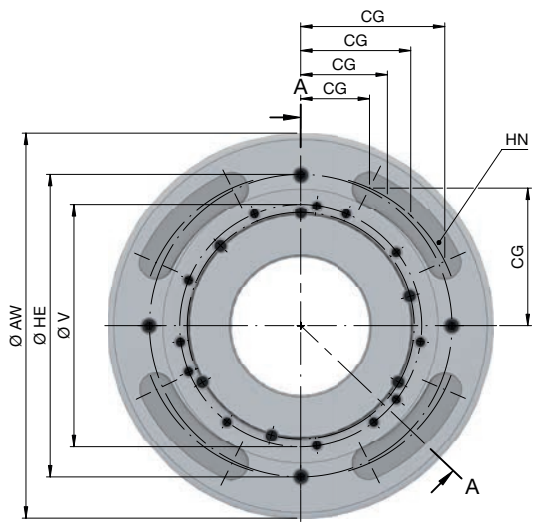

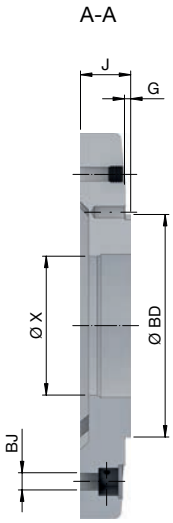

Size		52 SE / RD	65 SE / RD	80/100 SE / RD
Bolt hole circle	V	**LK Ø 156 [6 x M8]**	**LK Ø 176 [6 x M8]**	**LK Ø 234 [6 x M10]**
Flange location	BD	Ø 145 g5	Ø 162 g5	Ø 240 f7
Interface	X	Ø 101 H7		Ø 140 H7
Outer Ø [mm]	AW	280		350
Height [mm]	J	36	36,5	35
Centering length [mm]	G	4	4,5	3,5
Mounting slots for T-groove table with groove spacing [mm]	CG	50, 63, 80, 100		
Groove width [mm]	BJ	12,5		13,5
Protective cover	HN	4x		
Torsional safety	HE	220 [4 x M10]		300 [4 x M10]
Weight [kg]		10,5	10,7	17
In stock		✔	✔	✔
Material no.		10001437	10001436	10001434

Manual chuck TOROK

InoFlex

Compensating 4-jaw clamping device

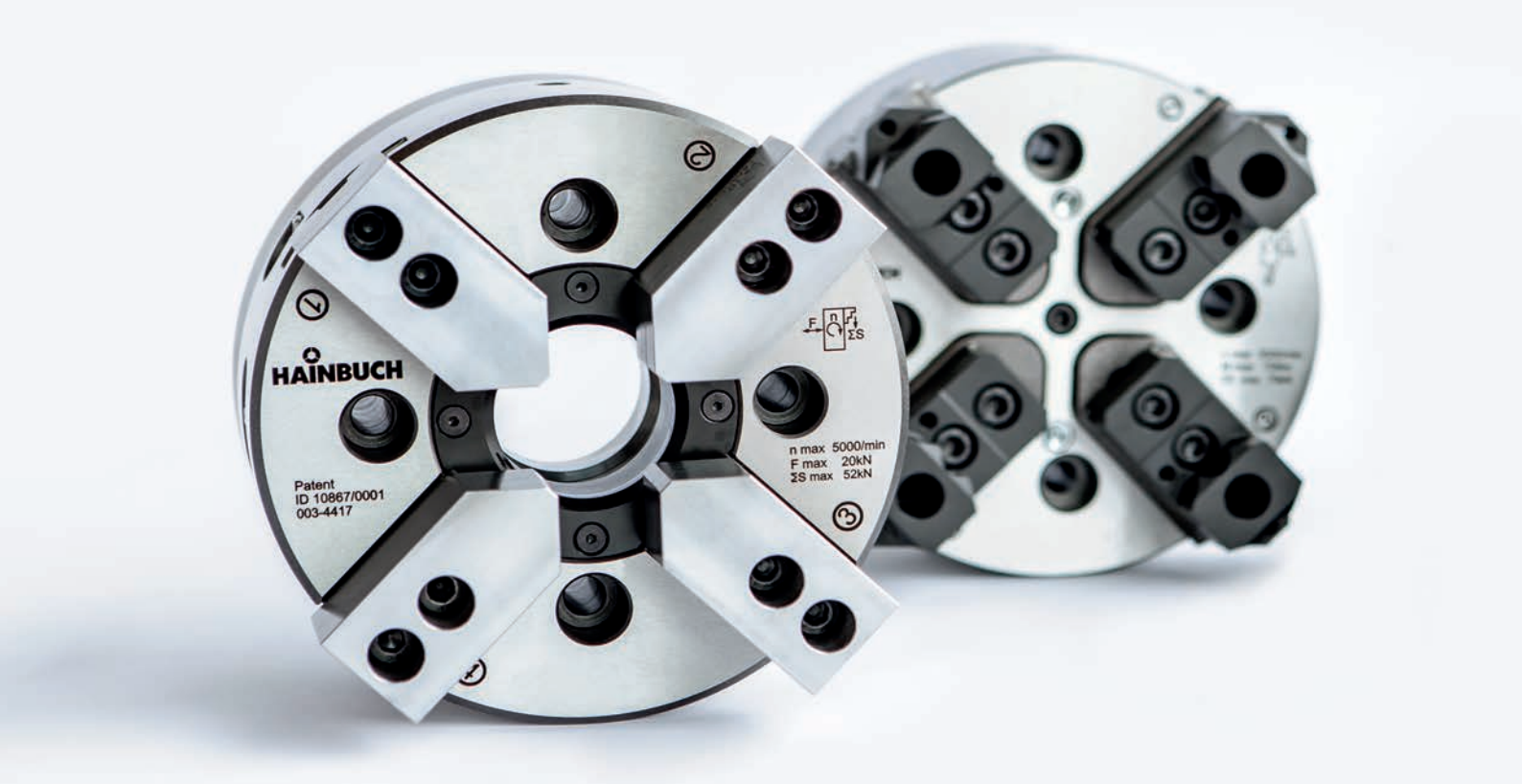

The new InoFlex VT-S and VD 4-jaw compensating chucks enable optimal clamping of round, rectangular, and geometrically irregular workpieces or workpieces that are susceptible to deformation during turning operations.

Thanks to the 4-jaw workholding technology, with which the jaw pairs enclose the center in a manner that provides compensation, the workpiece is always clamped centered – no matter how asymmetric it is. Compensation is achieved by connecting the sliding carriages located in the circle by means of levers.

This ensures substantially safer and more stable clamping than with conventional 3-jaw chucks or non-compensating concentric clamping vises. You can therefore switch between workpieces with different geometries and clamping diameters, without the need for additional clamping devices.

They are suitable for clamping of blanks and finished parts; they compensate in the case of blanks and provide for excellent repeatability in the case of finished parts.

Key advantages

- 4-sided clamping [2x2] with compensation of the opposing jaws
- Ideal for clamping workpieces that are susceptible to deformation
- For I.D. and O.D. clamping
- High repeatability and run-out accuracy

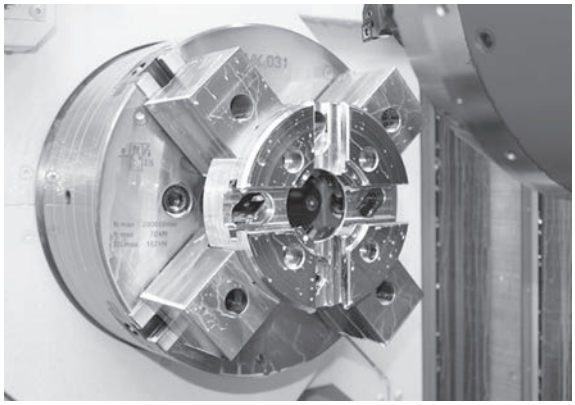

InoFlex in use

InoFlex manual / power chuck

InoFlex chuck types

	InoFlex VD	InoFlex VT-S
		
Applications	Turning	Turning
Actuation	Manually actuated	Power-operated
Sizes	165, 215, 260, 315	165, 215, 260, 315
RPM n max.	3500	5000
Clamping range of all sizes [mm]	8 – 315	10 – 315
Advantages	■ Manual actuation – a clamping cylinder is not required ■ Sensitive clamping possible ■ 4-jaw or 2-jaw clamping possible ■ Clamping against fixed end-stop ■ Drilling area for front end-stop ■ Stationary implementation in the machining center	■ Large through-bore ■ Sensitive clamping possible ■ 4-jaw or 2-jaw clamping possible ■ Drilling area for front end-stop
Clamping elements	 Jaws	 Jaws
Adaptations	 InoZet pendulum bridge  InoTop hybrid chuck jaw	 InoZet pendulum bridge  InoTop hybrid chuck jaw

Applications

Technical suitability	Vise	3-jaw chuck	InoFlex
Clamping of asymmetrical workpieces	✘	✘	✔
Clamping of round workpieces	✘	✔	✔
Clamping of cubic workpieces	✔	✘	✔
Clamping workpieces that are susceptible to deformation	✘	✘	✔
I.D. clamping	✘	✔	✔
Centric compensating clamping	✘	✘	✔

✔ = suitable ✘ = unsuitable

InoFlex VD [manual chuck without capacity] in detail

Designation	
1 Adjustable top jaws with fine serration 2 Innovative lubricating system with grease nipple in the chuck body and for each jaw guide 3 Manual actuation via socket wrench 4 Stable base body 5 Base jaw with serration for use with different top jaws 6 Clamping reserve indicator [shows whether safe or unsafe clamping is present in the stroke range]	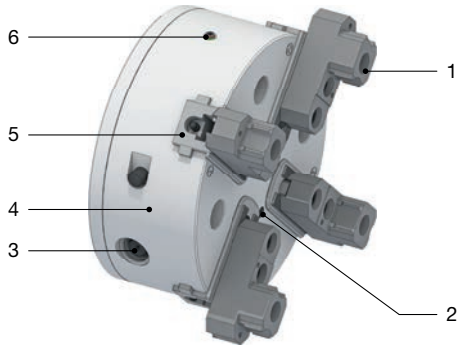

InoFlex VT-S [power chuck with capacity] in detail

Designation	
1 Adjustable top jaws with fine serration 2 Large capacity for bar material or chuck parts 3 Innovative lubricating system with grease nipple in the chuck body and for each jaw guide 4 Stable base body 5 Base jaw with serration for use with different top jaws 6 Clamping reserve indicator [shows whether safe or unsafe clamping is present in the stroke range]	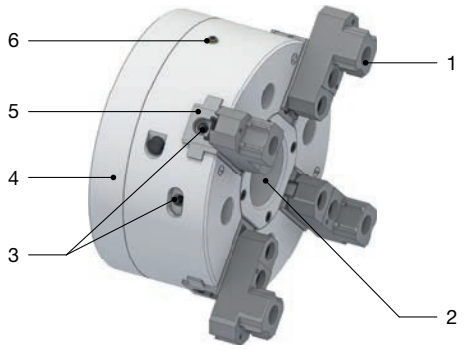

Centric compensating clamping possibilities

Workpiece type	Asymmetric	Round	Cubic	Susceptible to deformation
Workpiece example	 Flame cutout 200 x 200 mm	 Saw cut Ø 150 mm	 Rectangular 150 x 200 mm	 Ring Ø 210 mm
Advantages	■ Simple centric clamping through jaw adjustment	■ Compensation of the roundness error on the raw material	■ Simple centric clamping through jaw adjustment	■ Uniform clamping force distribution on four jaws ■ Precision compensation
Clamping situation	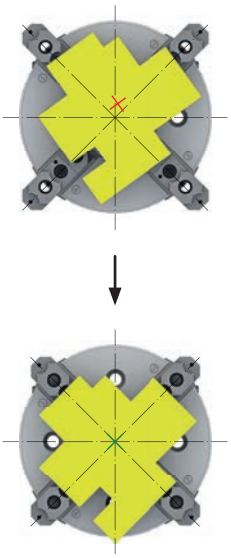	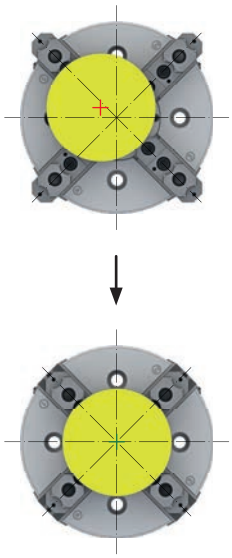	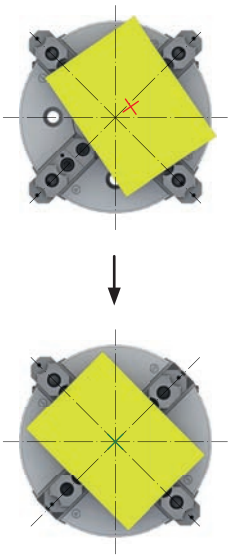	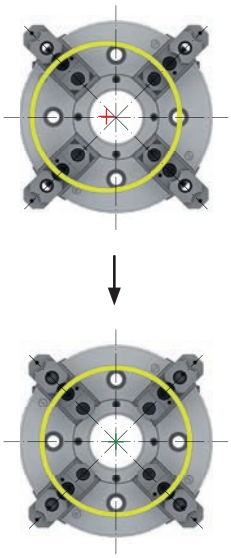

InoFlex VD manual chuck. Technical data

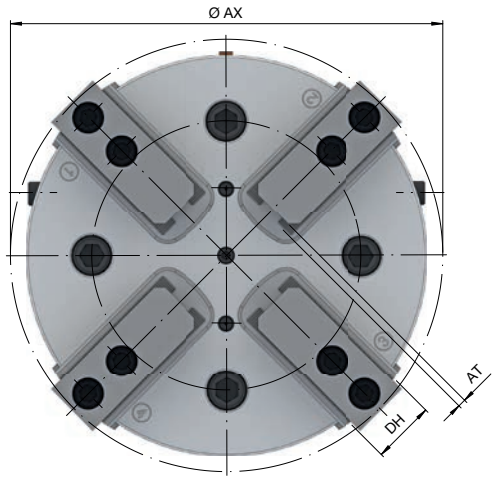

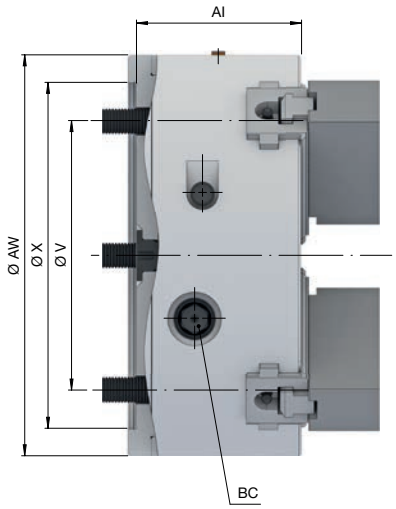

Size		165	215	260	315
Variant		VD			
Run-out ≤ [mm]		0,020			
Max. clamping force [kN]		70	85	100	125
Max. actuating torque [Nm]	BC	70	120	160	200
RPM n max. [1/min.]		3500	3000	2700	2200
Stroke per jaw [mm]	AT	4,3	5,2		6,1
Compensating stroke for each jaw [mm]		2,5	3,5		4
Length without jaws [mm]	AI	76	85	105	130
Jaw width [mm]	DH	31	36	40	
Bolt hole circle	V	LK Ø 104,8 [4 x M10]	LK Ø 133,4 [4 x M12]	LK Ø 171,4 [4 x M16]	
Outer Ø [mm]	AW	165	210	255	315
Swing Ø	AX	185	230	275	330
Interface	X	Ø 140	Ø 170	Ø 220	
Weight [kg]		12	22	39	75
In stock		✔	✔	✔	✔
Material no.		10001155	10001156	10001157	10001158

The run-out is related to the already machined top jaws.

		
Jaws Page 458	Flanges Page 141	Accessory overview Page 478

Scope of delivery

- Chuck without spindle flange
- Top jaws, soft
- T-slot nuts
- Grease cartridge
- Fit-on wrench socket for actuation tool

InoFlex VT-S power chuck. Technical data

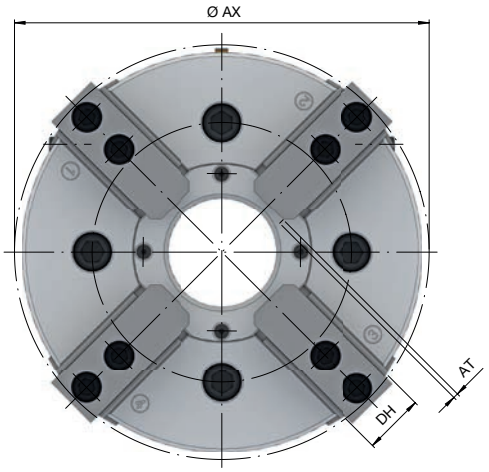

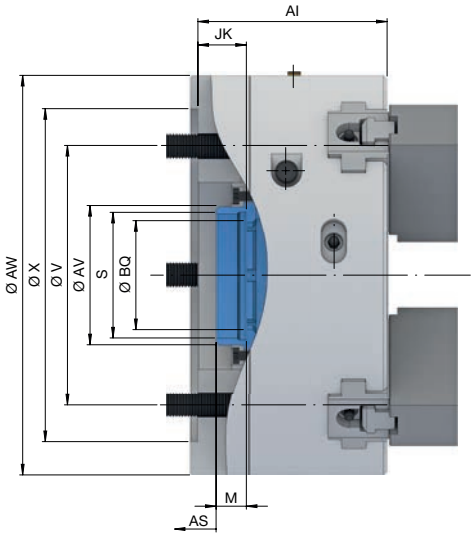

Size		165	215	260	315
Variant		VT-S			
Run-out ≤ [mm]		0,020			
Max. clamping force [kN]		52	100	125	150
Max. axial drawtube force [pull / push] [kN]		20	40	50	60
RPM n max. [1/min.]		5000	3900	3500	3000
Stroke per jaw [mm]	AT	3,4	4,3	5	5,5
Compensating stroke for each jaw [mm]		2,3	3,3	4,0	4,4
Ø Capacity [mm]	BQ	46	52	72	91
Length without jaws [mm]	AI	88	109,2	125	134
Jaw width [mm]	DH	32	34	42	46
Connecting thread inside	S	M56 x 1,5	M60 x 2	M85 x 2	M100 x 2
Piston stroke [mm]	AS	15	19	22	24
Bolt hole circle	V	LK Ø 104,8 [4 x M10]	LK Ø 133,4 [4 x M12]	LK Ø 171,4 [4 x M16]	LK Ø 235 [4 x M22]
Outer Ø [mm]	AW	168	218	264	315
Inner Ø [mm]	AV		67	92	112
Swing Ø	AX	178	222	274	326
Interface	X	Ø 140	Ø 170	Ø 220	Ø 300
Depth of thread [mm]	M	18	20		24
Thread position in unclamped position [mm]	JK	33	36	32	40
Weight [kg]		12	26	42	64
In stock		✔	✔	✔	✔
Material no.		10015194	10015199	10015201	10015202

The run-out is based on soft, bored top jaws.

The InoFlex VT-S replaces the InoFlex VT with better technology. This offers a higher repeatability [≤ 0.006 mm] and easier in-house machining of the soft top jaws.


Jaws Page 458 | Flanges Page 141 | Accessory overview Page 478

Scope of delivery

- Chuck without spindle flange
- Top jaws, soft
- T-slot nuts
- Grease cartridge
- Assembly wrench for revolving threaded ring

Flanges for InoFlex short taper. Technical data

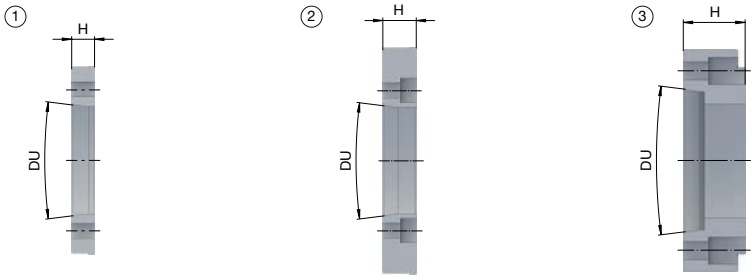

Size	Suitable for	Spindle nose DU	Designation	Flange type	Length [mm] H	In stock	Material no.
165	VD / VT-S	A2-5	VZ165	1	17	✔	10014728
		A2-6	VZ166	3	46	✔	10014729
		A2-8	VZ168		35	✔	10014730
215	VD / VT-S	A2-5	VZ265	2	25	✔	10014736
		A2-6	VZ266	1	17	✔	10014737
		A2-8	VZ268	3	44	✔	10014738
260/315	VD [size 260/315] / VT-S [size 260]	A2-6	VZ366	2	28	✔	10014744
		A2-8	VZ368	1	19	✔	10014745
		A2-11	VZ3611	3	47	✔	10014746
315	VT-S	A2-8	VZ468	2	30	✔	10014751
		A2-11	VZ4611	1		✔	10014752

Machine spindle standard DIN DIN 55026 / ISO 702-1.

Flanges for InoFlex short taper with bayonet. Technical data



Size	Suitable for	Spindle nose DU	Designation	Flange type	Length [mm] H	In stock	Material no.
165	VD / VT-S	A2-5	VZ175	1	17	✔	10014731
		A2-6	VZ176	2	46	✔	10014732
		A2-8	VZ178		34	✔	10014733
215	VD / VT-S	A2-5	VZ275	1	19	✔	10014739
		A2-6	VZ276			✔	10014740
		A2-8	VZ278	2	40	✔	10014741
260/315	VD [size 260/315] / VT-S [size 260]	A2-6	VZ376	1	28	✔	10014747
		A2-8	VZ378			✔	10014748
315	VT-S	A2-8	VZ478	1	36	✔	10014753
		A2-11	VZ4711			✔	10014754

Machine spindle standard DIN 55027 / ISO 702-3.

Flanges for InoFlex short taper with camlock. Technical data

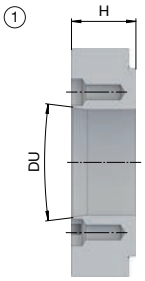

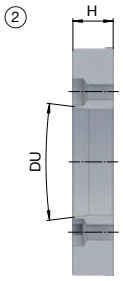

Size	Suitable for	Spindle nose DU	Designation	Flange type	Length [mm] H	In stock	Material no.
165	VD / VT-S	A2-5	VZ195	2	48	✔	10014734
		A2-6	VZ196		52,5	✔	10014735
215	VD / VT-S	A2-5	VZ295	1	30	✔	10014742
		A2-6	VZ296	2	55	✔	10014743
260/315	VD [size 260/315] / VT-S [size 260]	A2-6	VZ396	1	34	✔	10014749
		A2-8	VZ398		56	✔	10014750
315	VT-S	A2-8	VZ498	1	38	✔	10014755
		A2-11	VZ4911		52	✔	10014756

Machine spindle standard DIN DIN 55029 / ISO 702-2.

InoFlex manual / power chuck

B-Top

A large through-bore, for a reason



Jaw chuck B-Top

Fast jaw change with quick change design and high repeatability – that is what makes the B-Top jaw chuck product line so flexible. Particularly for small lot sizes. Thus in most cases machining the chuck jaw to size is unnecessary. Also the insert bushing system is configured for small lot sizes and maximum flexibility. It enables clamping devices to be conveniently adapted to your requirement: Closed with ejector, spray nozzles, or with variable end-stop. Just the way you need it. And the innovative lubricating system ensures improved clamping force behavior of the wedge bar principle.

Key advantages

- Fast jaw change with individual unlocking
- Large through-bore with bushing inserts that can be changed from the front
- Proven wedge rod mechanism



B-Top jaw chuck in use

Jaw chuck B-Top

Jaw chuck B-Top. Technical data and order overview

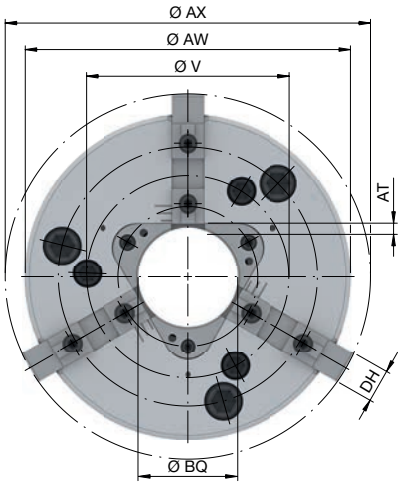

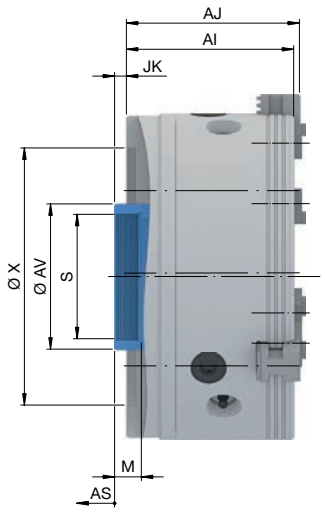

Size		165	215	260	315
Variant		B-Top			
Run-out ≤ [mm]		0,020		0,025	0,030
Max. clamping force [kN]		41	74	115	160
Max. axial drawtube force [pull / push] [kN]		30	46	65	90
RPM n max. [1/min.]		6000	5400	4000	3600
Stroke per jaw [mm]	AT	5,9	7,4	8,2	8,6
Ø Capacity [mm]	BQ	43	66	81	104
Length without jaws [mm]	AI	89	104,6	123,3	132,1
Length with jaws [mm]	AJ	94,4	109,4	129,5	139,8
Jaw width [mm]	DH	20	22	26	32
Connecting thread inside	S	M54 x 1,5	M78 x 1,5	M90 x 2	M115 x 2
Piston stroke [mm]	AS	20	25	28	
Bolt hole circle	V	LK Ø 104,8 [3 x M10]	LK Ø 133,4 [3 x M12]	LK Ø 171,4 [3 x M16]	
Outer Ø [mm]	AW	165	215	260	315
Inner Ø [mm]	AV	68	96	118	148
Swing Ø	AX	191.4	265.8	315	375.4
Interface	X	Ø 140	Ø 170	Ø 220	
Depth of thread [mm]	M	15	17	20,3	22,7
Thread position in unclamped position [mm]	JK	35,2	42,2	48,5	51,2
Weight [kg]		13	24	42	66
In stock		✔	✔	✔	✔
Material no.		10002027	10002028	10002029	10002030

The full functional range is guaranteed only in combination with HAINBUCH universal grease Material no. 10001489 and high-pressure grease gun Material no. 10001493.
The run-out refers to soft, milled top jaws.
The clamping range depends on the jaws that are used.

		
Jaws Page 454	Flanges Page 147	Accessory overview Page 478

Scope of delivery

- Jaw chuck
- Master jaws
- Actuation tool
- Assembly wrench for revolving threaded ring [size 260/315]

Jaw chuck B-Top in detail

Designation	
1 Jaws with cross offset 2 Large chuck through-bore 3 Innovative lubricating system, consequently longer lubricating intervals and improved clamping force behavior 4 Operational safety when changing jaws due to ball mechanism: The actuating wrench can only be pulled off if the wedge bar is properly engaged in the master jaw 5 Locking mechanism in the wedge bar enables a secure master jaw position and thus guarantees secure mesh of the master jaw gearing in the wedge bar 6 Different insert bushings for fast adaptation to the machining requirements	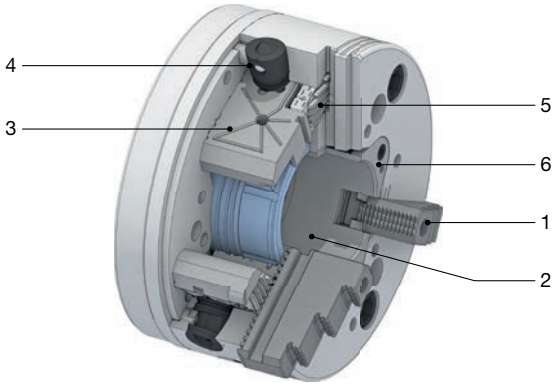

Flanges for jaw chuck B-Top

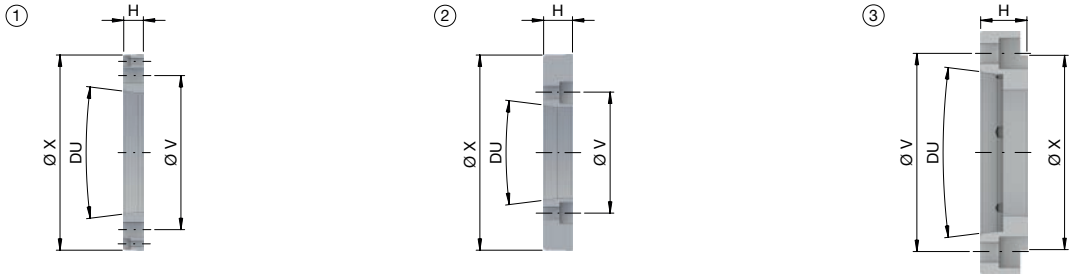

Size	Spindle nose DU	Flange type	Interface X	Length [mm] H	Bolt hole circle V	In stock	Material no.
165	A2-4	2	Ø 140	21	LK Ø 82,6 [6 x M10]	✔	10014760
	A2-5	1		16	LK Ø 104,8 [6 x M10]	✔	10014761
	A2-6	3		34	LK Ø 133,4 [6 x M12]	✔	10014762
215	A2-5	2	Ø 170	25	LK Ø 104,8 [6 x M10]	✔	10014763
	A2-6	1		17	LK Ø 133,4 [6 x M12]	✔	10014764
	A2-8	3		40	LK Ø 171,4 [6 x M16]	✔	10014765
260/315	A2-5	2	Ø 220	28	LK Ø 104,8 [6 x M10]	✔	10014766
	A2-6				LK Ø 133,4 [6 x M12]	✔	10014767
	A2-8	1		19	LK Ø 171,4 [6 x M16]	✔	10014768
	A2-11	3		50	LK Ø 235 [6 x M16]	✔	10014769

Machine spindle standard DIN 55026.

B-Top3

All fits in one another

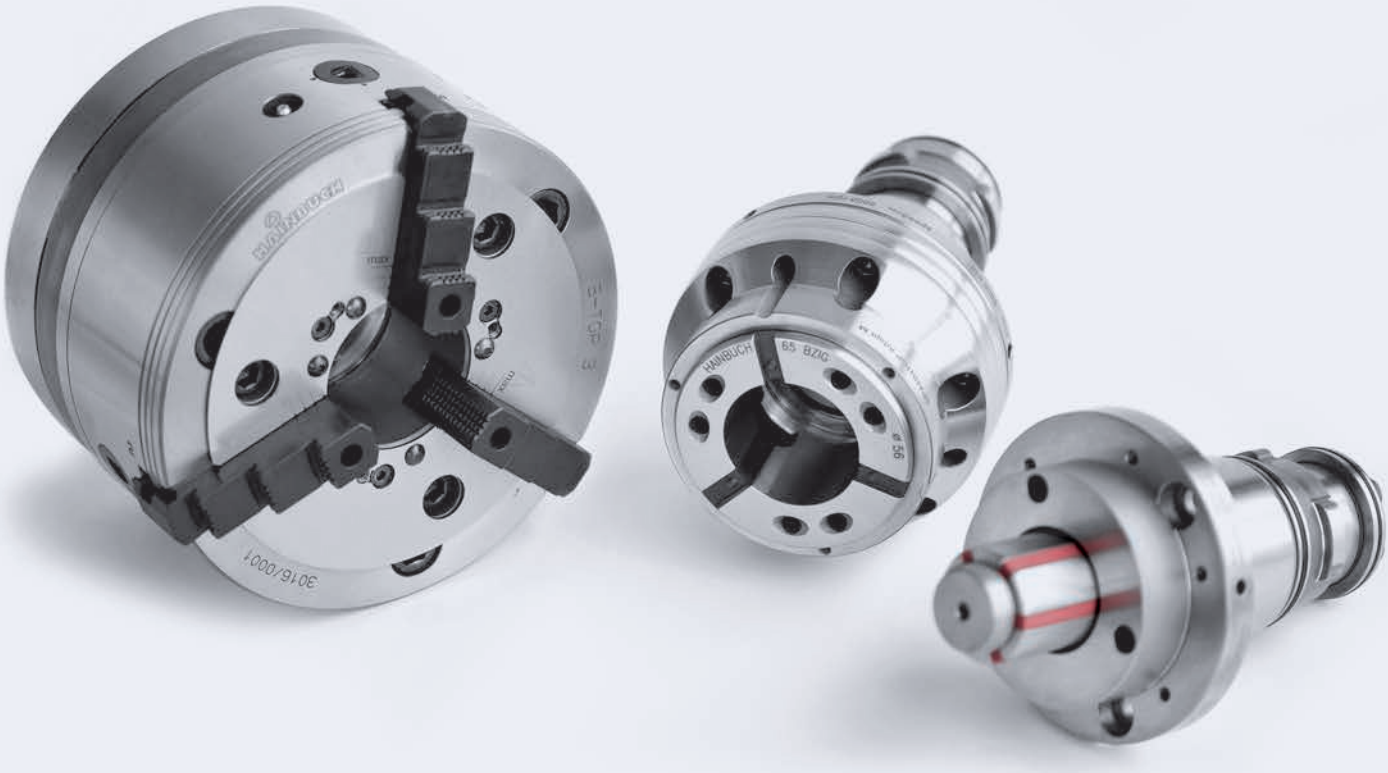

I.D., O.D. or jaw clamping – it's easy with the B-Top3 system. Everything fits together. With the MANDO Adapt segmented mandrel, you can change to perfect I.D. clamping in less than 2 minutes. The SPANNTOP adaptation is the right partner if you have reached your holding power and accuracy limits for O.D clamping. And all without disassembling the jaw chuck!

However, the B-Top3 basic clamping device also has its advantages: The fast change of jaws with a single-jaw unlocking mechanism and high repeatability is ideal especially for small lot sizes. Machining the chuck jaw to size is therefore unnecessary in most cases. Also, the insert bushing system is configured for small lot sizes and maximum flexibility. It enables clamping devices to be conveniently adapted to your requirements: closed, with ejector, spray nozzles or variable end-stop. Just the way you need it. And the innovative lubricating system improves clamping force behavior with the wedge bar principle.

You have never turned like this before.

Key advantages

- Jaw chuck with quick conversion to a segmented clamping bushing [I.D. clamping] and a clamping head [O.D. clamping]
- Fast jaw change with individual unlocking
- Large through-bore with bushing inserts that can be changed from the front
- Proven wedge rod mechanism



B-Top3 in use

Jaw chuck B-Top3

Jaw chuck B-Top3 in detail

Designation	
1 Jaws with cross offset 2 Large chuck bore with CENTREX interface for ultra-precise change-over without adjustment 3 Innovative lubricating system, consequently longer lubricating intervals and improved clamping force behavior 4 Operational safety when changing jaws due to ball mechanism: The actuating wrench can only be pulled off if the wedge bar is properly engaged in the master jaw 5 Locking mechanism in the wedge bar enables a secure master jaw position and thus guarantees secure mesh of the master jaw gearing in the wedge bar 6 Different insert bushings for fast adaptation to the machining requirements	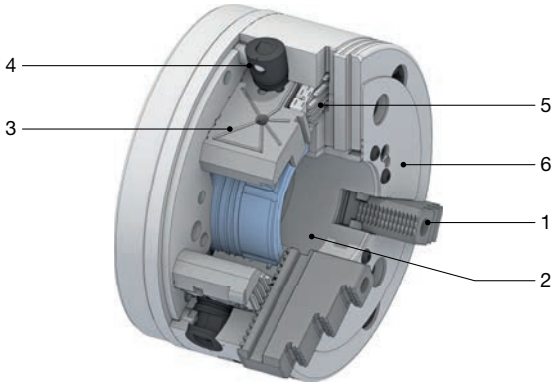

Order overview. Jaw chuck B-Top3

			Clamping elements and adaptations			
						
Size	Material no.	In stock	Jaws for jaw chuck B-Top Page 454	MANDO Adapt for jaw chuck Page 154	SPANNTOP Adapt Page 155	SPANNTOP Adapt M Page 155
215	10002031	✔	✔	✔	✔	✔

Detailed technical data follows.
The full functional range is only guaranteed if HAINBUCH universal grease, material no. 10001489, and high-pressure grease gun, material no. 10001493 are used.

Jaw chuck B-Top3. Technical data

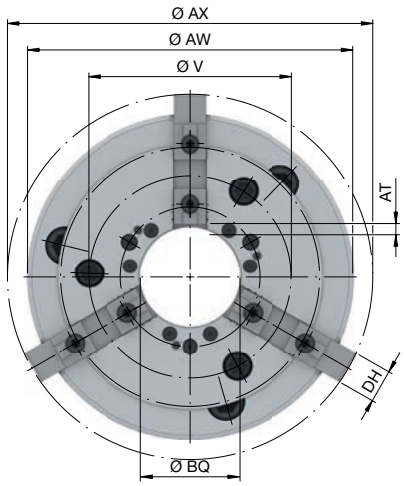

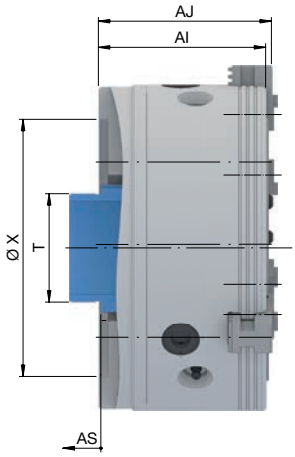

Size		215
Variant		**B-Top3**
Run-out ≤ [mm]		0,020
Max. clamping force [kN]		74
Max. axial drawtube force [pull / push] [kN]		46
RPM n max. [1/min.]		5400
Stroke per jaw [mm]	AT	7,4
Ø Capacity [mm]	BQ	62
Length without jaws [mm]	AI	104,6
Length with jaws [mm]	AJ	109,4
Jaw width [mm]	DH	22
Connecting thread outside	T	M72 x 1,5
Piston stroke [mm]	AS	25
Bolt hole circle	V	LK Ø 133,4 [3 x M12]
Outer Ø [mm]	AW	215
Swing Ø	AX	265.8
Interface	X	Ø 170
Weight [kg]		29,5
In stock		✔
Material no.		10002031

The run-out refers to soft, milled top jaws.
The clamping range depends on the jaws that are used.

				
Jaws Page 454	Flanges Page 152	Adaptations I.D. clamping Page 154	Adaptations O.D. clamping Page 155	Accessory overview Page 478

Scope of delivery

- Jaw chuck without spindle flange
- Master jaws
- Protection jaws
- Guard bushing for 22 mm wide top jaws
- Actuation tool

Jaw chuck B-Top3

Flanges for jaw chuck B-Top3

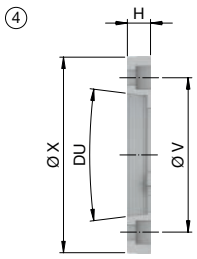

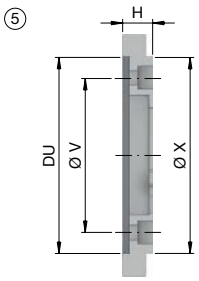

Size	Spindle nose DU	Flange type	Interface X	Length [mm] H	Bolt hole circle V	In stock	Material no.
215	A2-6	4	Ø 170	20	LK Ø 133,4 [6 x M12]	✔	10014757
	A2-8			37	LK Ø 171,4 [6 x M16]	✔	10014758
	AP170	5		20	LK Ø 133,4 [6 x M12]	✔	10014759

Machine spindle standard DIN 55026.

All adaptation variants at a glance

	MANDO Adapt for jaw chuck	SPANNTOP Adapt	SPANNTOP Adapt M
	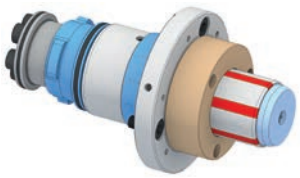		
Description	Mandrel-in-jaw-chuck with draw bolt	Clamping head end-stop chuck	Clamping head through-bore chuck
Sizes	0, 1, 2, 3	65, 80, 100	65
Clamping range of all sizes [mm]	20 – 80	3 – 100	3 – 65
Ø Capacity			51,3

Attention: These adaptations are configured for a cylinder stroke of 25 mm. For shorter strokes a specially configured adaptation is required.

MANDO Adapt in detail

Designation	
1 Segmented clamping bushing with pull-back and hardened steel segments, joined in a vulcanization process 2 Torsional safety lock of segmented clamping bushing 3 Push-off pin 4 Integrated empty stroke. This means it is not necessary to adjust the limit switch on the clamping cylinder 5 CENTREX system for µm-precise use without adjustment 6 Mounting screws	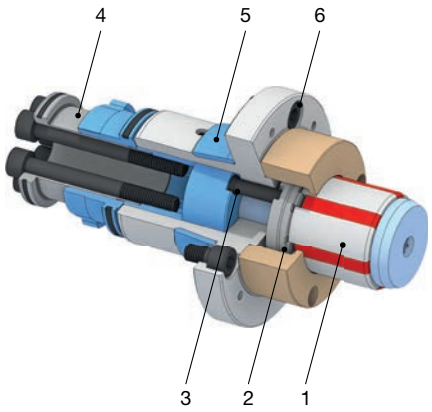

SPANNTOP Adapt in detail [end-stop chuck]

Designation	
1 Clamping head with pull-back and hardened steel segments, joined in a vulcanization process 2 Torsional safety lock of the clamping head 3 Fixed base end-stop for clamping with pull-back effect, central mounting thread for workpiece specific end-stop 4 Integrated empty stroke. This means it is not necessary to adjust the limit switch on the clamping cylinder 5 CENTREX system for µm-precise use without adjustment 6 Mounting screws	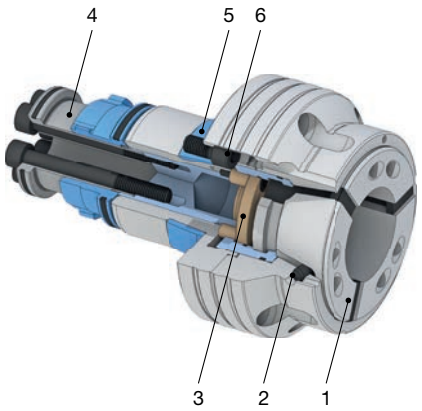

SPANNTOP Adapt M in detail [through-bore chuck]

Designation	
1 Clamping head with pull-back and hardened steel segments, joined in a vulcanization process 2 Torsional safety lock of the clamping head 3 Through-bore Ø 51.3 mm 4 Integrated empty stroke. This means it is not necessary to adjust the limit switch on the clamping cylinder 5 CENTREX system for µm-precise use without adjustment 6 Mounting screws	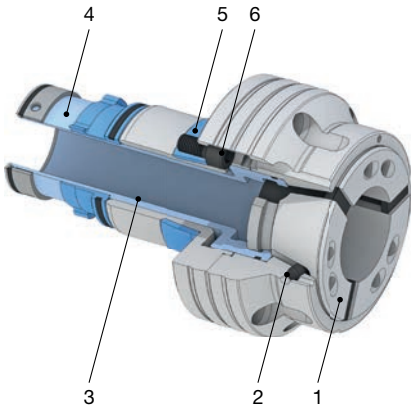

MANDO Adapt T211. Technical data and order overview

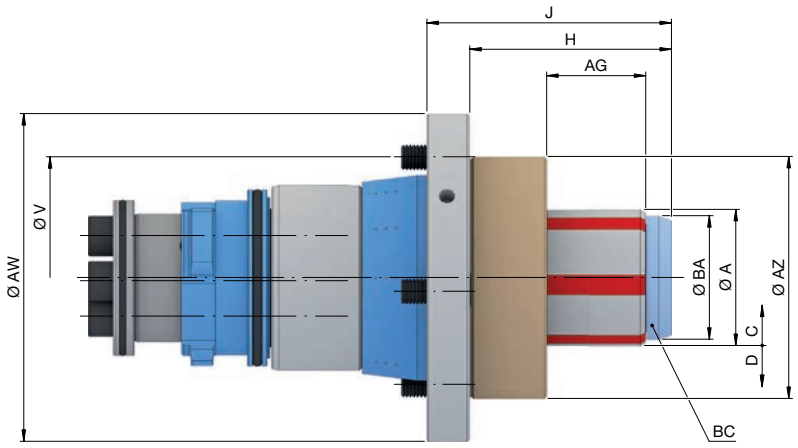

Size		0	1	2	3
Adaptation size			**215**		
Run-out ≤ [mm]			0,010		
Max. clamping length [mm]	AG	22	26	43	49
Clamping range [mm]	A	20 – 28	26 – 38	36 – 54	50 – 80
Release stroke in Ø [mm]	C		0,3		0,4
Reserve stroke in Ø [mm]	D	0,4		0,5	
Range / recommended workpiece tolerance [mm]			± 0,25		± 0,35
Max. axial drawtube force [pull / push] [kN]		10		20	25
Max. radial clamping force [kN]		42		85	105
RPM n max. [1/min.]			6000		
Length [mm]	H	40	51	71	80
Height [mm]	J	60	71	90	97
Bolt hole circle	V		LK Ø 104,8 [3 x M10]		
Outer Ø [mm]	AW		130		
Draw bolt Ø [mm]	BA	19		35	49
Max. actuating torque [Nm]	BC	10	20	25	55
End-stop outer Ø [mm]	AZ	65	69	93	96
Weight [kg]		4		5	
In stock		✔	✔	✔	✔
Material no.		10001564	10001565	10001566	10001567

In addition to the run-out of the MANDO Adapt, the run-out of the jaw chuck must also be taken into account.
Attention: These adaptations are configured for a cylinder stroke of 25 mm. For shorter strokes a specially configured adaptation is required.


Segmented clamping bushings
Page 442


Accessory overview
Page 478

Scope of delivery

- Mandrel adaptation
- Draw bolt

SPANNTOP Adapt. Technical data and order overview

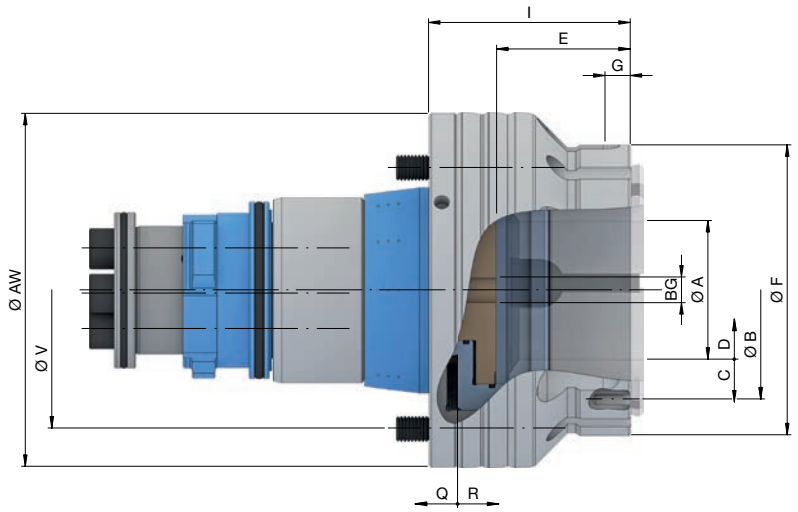

Size		65	80	100
Clamping range [mm]	A	**3 – 65**	**4 – 80**	**15 – 100**
Run-out ≤ [mm]		0,010		
Max. radial clamping force [kN]		105	115	150
Max. axial drawtube force [pull / push] [kN]		45	50	65
Reserve stroke in Ø [mm]	D	1		1,5
Release stroke in Ø [mm]	C	0,6		2
RPM n max. [1/min.]		6000	5500	5000
Reserve stroke axial [mm]	Q	2		3
Release stroke axial [mm]	R	2,5		5
Location front end-stop	F	Ø 115 f7	Ø 145 f7	Ø 191 f7
Bolt hole circle end-stop	B	LK Ø 107 [3 x M5]	LK Ø 130 [3 x M6]	LK Ø 168 [3 x M8]
Centering length [mm]	G	10		
End-stop depth [mm]	E	53	52	63,5
End-stop thread size [M]	BG	12		
Total length [mm]	I	80	85	110
Outer Ø [mm]	AW	140	182	194
Bolt hole circle	V	LK Ø 120 [3 x M10]	LK Ø 160 [3 x M10]	
Weight [kg]		8	14	20
In stock		✔	✔	✔
Material no.		10001670	10001671	10001672

In addition to the run-out of the SPANNTOP Adapt, the run-out of the jaw chuck must also be taken into consideration.
Attention: These adaptations are configured for a cylinder stroke of 25 mm. For shorter strokes a specially configured adaptation is required.


Clamping heads
Page 430


Accessory overview
Page 478

SPANNTOP Adapt M. Technical data and order overview

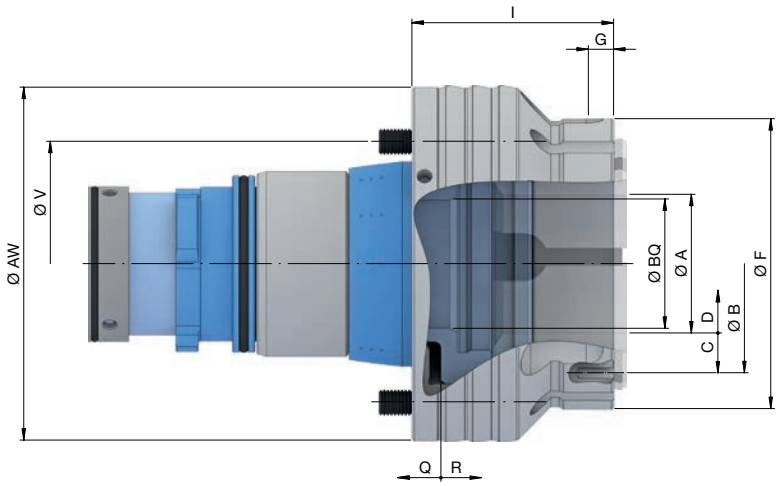

Size		65
Clamping range [mm]	A	**3 – 65**
Run-out ≤ [mm]		0,010
Max. radial clamping force [kN]		105
Max. axial drawtube force [pull / push] [kN]		45
Reserve stroke in Ø [mm]	D	1
Release stroke in Ø [mm]	C	0,6
RPM n max. [1/min.]		6000
Reserve stroke axial [mm]	Q	2
Release stroke axial [mm]	R	2,5
Location front end-stop	F	Ø 115 f7
Bolt hole circle end-stop	B	LK Ø 107 [3 x M5]
Centering length [mm]	G	10
Ø Capacity [mm]	BQ	51,3
Total length [mm]	I	80
Outer Ø [mm]	AW	140
Bolt hole circle	V	LK Ø 120 [3 x M10]
Weight [kg]		8
In stock		✔
Material no.		10001673

In addition to run-out of the SPANNTOP Adapt M, run-out of the jaw chuck must also be taken into consideration.
Attention: These adaptations are configured for a cylinder stroke of 25 mm. For shorter strokes a specially configured adaptation is required.


Clamping heads
Page 430


Accessory overview
Page 478

Jaw chuck B-Top3

Eccentric chuck

Concentric and eccentric machining in a single clamping set-up

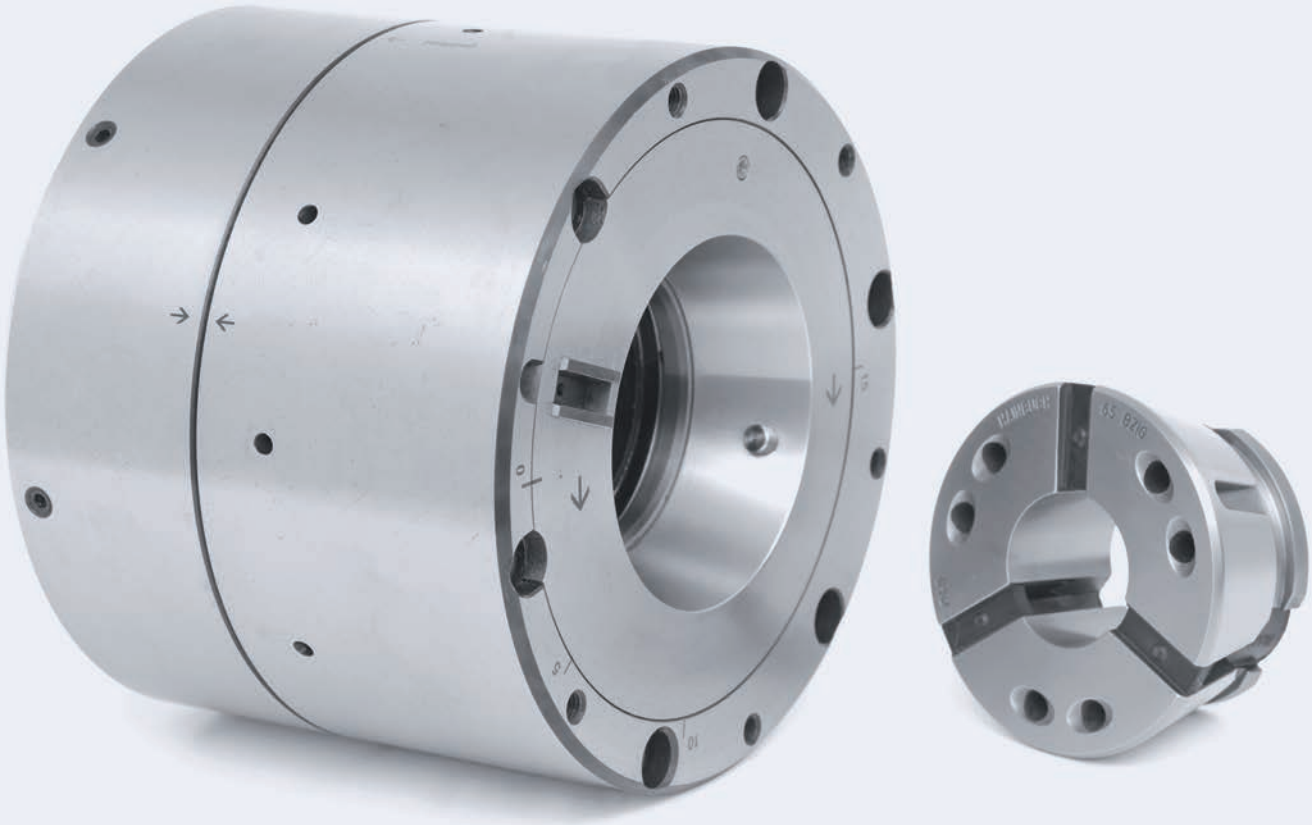

Concentric and eccentric complete machining in a single clamping set-up? That's right! With our compact chuck you can turn an eccentric position on the workpiece – in a single set-up without having to re-chuck it! Thus you save time and money. Change-over from concentric to eccentric takes just a few seconds – it is automatic and convenient due to the setting tool in the turret and the c-axis of the machine spindle. Minimum set-up times and no machine changes whatsoever. And first and foremost: You can use your normal clamping cylinder.

Key advantages

- Infinite eccentric adjustment via the c-axis
- Concentric and eccentric machining in a single clamping set-up
- Different eccentric dimensions are possible with the same chuck and clamping head
- Minimal inertia loss compared to 3-jaw chucks
- Workpiece stabilization through axial draw force applied against the workpiece end-stop
- Standard clamping heads can be used

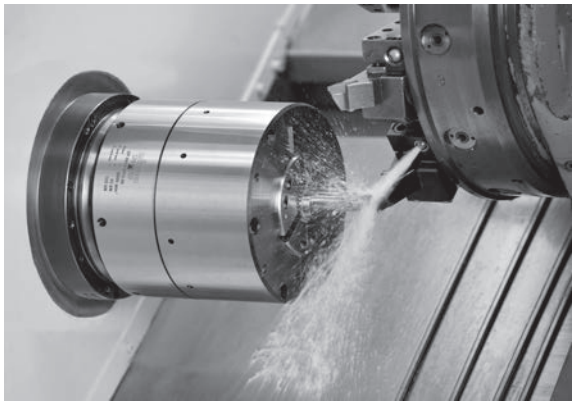

Eccentric chuck in use

Eccentric chuck. Technical data and order overview

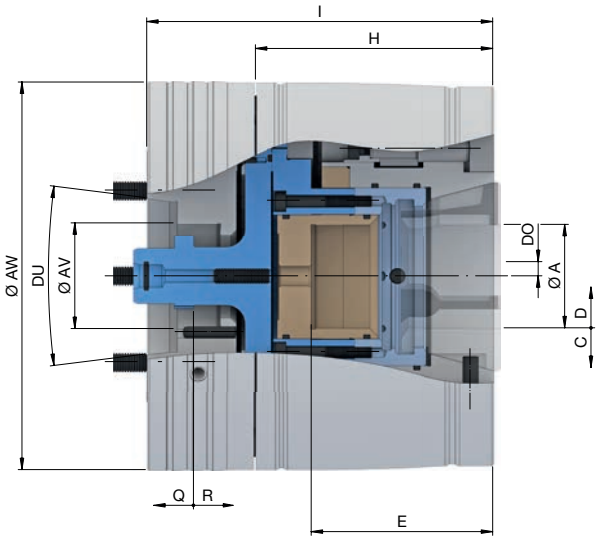

Size		65		
Spindle nose	DU	**A2-5**	**A2-6**	**A2-8**
Run-out ≤ [mm]		0,020		
Max. radial clamping force [kN]		105		
Max. axial drawtube force [pull / push] [kN]		45		
RPM n max. [1/min.]		6000		
Max. eccentricity [mm]	DO	15		
Clamping range [mm]	A	3 – 65		
Release stroke in Ø [mm]	C	0,6		
Reserve stroke in Ø [mm]	D	1		
End-stop depth [mm]	E	96		
Length [mm]	H	125,5		
Total length [mm]	I	183		
Reserve stroke axial [mm]	Q	2		
Release stroke axial [mm]	R	2,5		
Outer Ø [mm]	AW	205		
Inner Ø [mm]	AV	56		
Weight [kg]		40	39,5	38,6
In stock		-	-	-
Material no.		10002123	10002124	10002125

Please note: RPM depends upon the chuck position and workpiece.
Machine spindle standard DIN ISO 702-1.


Clamping heads
Page 430


Accessory overview
Page 478

Scope of delivery

- Eccentric chuck
- Adjustment tool

Eccentric chuck

Machine specific chucks



Photo: INDEX-Werke GmbH & Co. KG

Machine specific chucks

Standard or machine specific, which chuck fits?

In 90 % of all cases, you will find what you are looking for with our standard chucks, that fit for the following brands, such as:

- Biglia
- Daewoo
- Doosan
- Emco
- Gildemeister
- MAG Boehringer
- MAG Hessapp
- Mazak
- Miyano
- Monforts
- Mori Seiki
- Nakamura
- Okuma
- Scherer
- Spinner
- Takamaz
- Weiler
- Weisser
- and other machine tool manufacturers.

For certain lathes we have designed special chucks that take the connection or other equipment features of the respective machine into account. You will find a selection to the right, such as

- EMAG
- INDEX
- TRAUB
- LEHMANN rotary indexing tables

Of course, we still have much more in the product line. Simply ask us about it.

EMAG

SPANNTOP nova chuck for EMAG

Size	Variant	Machine type	Spindle nose	Connecting thread outside	In stock	Material no.
80	Combi pull-back	VSC 200 / VL	A2-5	M20 x 2,5	✔	10001846
100	Combi pull-back	VSC 250 / VL 5	A2-6	M20 x 2,5	✔	10001847

Machine spindle standard DIN 55026.

INDEX

TOPlus mini chuck für INDEX

Size	Variant	Machine type	Ø Capacity [mm]	Spindle nose	Connecting thread inside	In stock	Material no.
65	Deadlength	G160-D65 / C65 / C200-D65 / ABC65 HSP / R200 D65 / G220-D65	66	AP140	M76 x 1,5	✔	10000599

SPANNTOP nova chuck for INDEX

Size	Variant	Machine type	Ø Capacity [mm]	Spindle nose	Connecting thread inside	In stock	Material no.
42	Combi pull-back	C100-D42 / A100-D42	43	A2-5	M52 x 1,5	✔	10001845
	Combi deadlength	A100-D42 / C100	42,5			-	10001859
65	Combi pull-back	G160-D65 / C65 / C200-D65 / ABC65 / G220-D65	66	AP140	M76 x 1,5	✔	10001857
	Combi deadlength	C200 / G160 / R200-D65	67			✔	10001860
	Modular	G220-D65				✔	10001843
100	Modular	C200-D100	91	A2-8	M100 x 1,5	✔	10001841

Machine spindle standard DIN 55026.

SPANNTOP chuck for INDEX

Size	Variant	Machine type	Ø Capacity [mm]	Spindle nose	Connecting thread outside	Connecting thread inside	In stock	Material no.
42	Combi deadlength	G200-42 / G160-42	43	A2-5		M52 x 1,5	✔	10001712
	Modular	ABC36/42 / G160-D42 / G200-D42	44,1		M52 x 1,5		✔	10001690
		C100-D42	44			M52 x 1,5	✔	10001693
65	Combi pull-back	G200-D60	61,5	AP85		M69 x 1,5	-	10001696
	Combi deadlength		62				-	10001669
	Modular	C200-D65 / G160-D65 / R200-D65	65,5	AP140		M76 x 1,5	✔	10001688
		ABC52/60 / G200-D60	61		M69 x 1,5		✔	10001689
		ABC / G200-D65	68			M74 x 1,5	✔	10001691
100	Modular	G300-D90	91	A2-8		M100 x 1,5	✔	10001685
		G300-D102	103			M112 x 1,5	✔	10001694

Machine spindle standard DIN 55026.

INDEX ABC 36 / 42. Machine specific chucks incl. accessories

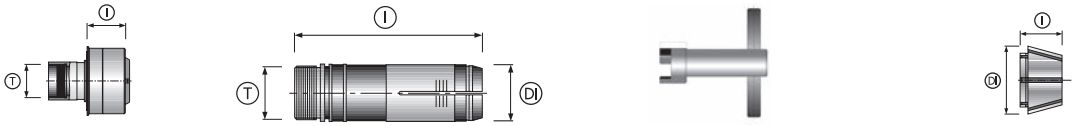

Product variants	Product	Profile	Clamping range [mm]	Type of serration	Base bore Ø [mm]	Head Ø [mm] DI	Connecting thread outside T	Total length [mm] l	In stock	Material no.
	Machine specific SPANNTOP chucks						M52 x 1,5	81	✔	10001690
	Manual changing fixture								✔	10006986
SPANNTOP BZI	Clamping head RD	●	4,0 - 7,5	Smooth		80		47	✔	sk42bzir4,0-7,5
			8	Radial grooves					✔	sk42bzir8,0
			8,5 - 10,5						✔	sk42bzir8,5-10,5
			11 - 42	Radial and axial grooves					✔	sk42bzir11,0-42,0
		■	7	Smooth					✔	sk42bziv7,0
			8 - 10	Radial grooves					✔	sk42bziv8,0-10,0
			11 - 28						✔	sk42bziv11,0-28,0
		⬢	7	Smooth					✔	sk42bzis7,0
			8 - 10	Radial grooves					✔	sk42bzis8,0-10,0
			11 - 37						✔	sk42bzis11,0-37,0

Product variants	Product	Profile	Clamping range [mm]	Type of serration	Base bore Ø [mm]	Head Ø [mm] DI	Connecting thread outside T	Total length [mm] l	In stock	Material no.
RS system	Outer sleeve					39,6	M40 x 1 - LH	116	✔	254e/rs
	Inner collet steel	●	4,0 - 32,0						✔	rs32/st/r4,0-32,0
		■	7,0 - 9,0						-	rs32/st/v7,0-9,0
			10,0 -21,0						-	rs32/st/v10,0-21,0
		⬢	7,0 - 9,0						-	rs32/st/s7,0-9,0
			10,0 - 27,0						-	rs32/st/s10,0-27,0
	Inner collet steel brass	●	4,0 - 32,0						-	rs32/sb/r4,0-32,0
		■	7,0 - 9,0						-	rs32/sb/v7,0-9,0
			10,0 - 22,0						-	rs32/sb/v10,0-22,0
		⬢	7,0 - 9,0						-	rs32/sb/s7,0-9,0
			10,0 - 27,0						-	rs32/sb/s10,0-27,0
	Inner collet SPH	●	4,0 - 32,0						-	rs32/sph/r4,0-32,0
		■	7,0 - 9,0						-	rs32/sph/v7,0-9,0
			10,0 - 22,0						-	rs32/sph/v10,0-22,0
		⬢	7,0 - 9,0						-	rs32/sph/s7,0-9,0
			10,0 - 27,0						-	rs32/sph/s10,0-27,0
	Inner collet KSB	●	4,0 - 29,5						-	rs32/ksb/r4,0-29,5
		■	8,0 - 9,0						-	rs32/ksb/v8,0-9,0
			10,0 - 22,0						-	rs32/ksb/v10,0-22,0
		⬢	8,0 - 9,0						-	rs32/ksb/s8,0-9,0
			10,0 - 27,0						-	rs32/ksb/s10,0-27,0
	Inner collet OXK	●	8,0 - 9,0						-	rs32/ksb/s8,0-9,0
			10,0 - 27,0						-	rs32/ksb/s10,0-27,0
	Wrench								✔	10008171
	Guide ring for feed tube	●							-	254e/f-c
	Segmented collet		4,0 - 42,0	Smooth		59,57		39	✔	sz42r4,0-42,0
			7,0 - 9,0						-	sz42v7,0-9,0
			10,0 - 29,0						-	sz42v10,0-29,0
			7,0 - 9,0						✔	sz42s7,0-9,0
			10,0 - 36,0						✔	sz42s10,0-36,0
	Segmented collet for machining to size				8				✔	10013417
					15				✔	10013415
					30				✔	10013416
	Spindle head adapter plate								✔	10001419

INDEX ABC 52 / 60. Machine specific chucks incl. accessories

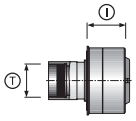
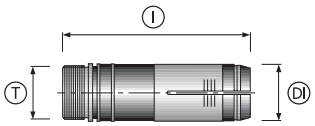

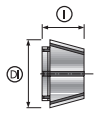

Product variants	Product	Profile	Clamping range [mm]	Type of serration	Base bore Ø [mm]	Head Ø [mm] DI	Connecting thread outside T	Total length [mm] l	In stock	Material no.
	Machine specific SPANNTOP chucks					99,5	M69 x 1,5	81	✔	10001689
	Manual changing fixture								✔	10006991
SPANNTOP BZI	Clamping head RD	●	4,0 - 7,5	Smooth		99,5		58	✔	sk65bzir4,0-7,5
			8	Radial grooves					✔	sk65bzir8,0
			8,5 - 10,5						✔	sk65bzir8,5-10,5
			11 - 65	Radial and axial grooves					✔	sk65bzir11,0-65,0
		■	8 - 10	Radial grooves					✔	sk65bziv8,0-10,0
			11 - 45						✔	sk65bziv11,0-45,0
		⬢	7	Smooth					✔	sk65bzis7,0
			8 - 10	Radial grooves					✔	sk65bzis8,0-10,0
			11 - 55						✔	sk65bzis11,0-55,0
RS system	Outer sleeve					57,6	M58 x 1 - LH	140	✔	10001868
	Inner collet steel	●	6,0 - 48,0						✔	rs50/st/r6,0-48,0
		■	12,0 - 34,0						-	rs50/st/v12,0-34,0
		⬢	6,0 - 9,0						-	rs50/st/s6,0-9,0
			10,0 - 41,0						-	rs50/st/s10,0-41,0
	Inner collet steel brass	●	6,0 - 48,0						-	rs50/sb/r6,0-48,0
		■	12,0 - 34,0						-	rs50/sb/v12,0-34,0
		⬢	6,0 - 9,0						-	rs50/sb/s6,0-9,0
			10,0 - 41,0						-	rs50/sb/s10,0-41,0
	Inner collet SPH	●	6,0 - 48,0						-	rs50/sph/r6,0-48,0
		■	12,0 - 34,0						-	rs50/sph/v12,0-34,0
		⬢	6,0 - 9,0						-	rs50/sph/s6,0-9,0
			10,0 - 41,0						-	rs50/sph/s10,0-41,0
	Inner collet KSB	●	12,0 - 44,5						-	rs50/ksb/r12,0-44,5
		■	12,0 - 31,0						-	rs50/ksb/v12,0-31,0
		⬢	12,0 - 41,0						-	rs50/ksb/s12,0-41,0

Product variants	Product	Profile	Clamping range [mm]	Type of serration	Base bore Ø [mm]	Head Ø [mm] DI	Connecting thread outside T	Total length [mm] l	In stock	Material no.
RS system	Inner collet OXK	●	12,0 - 20,0						-	rs50/oxk/r12,0-20,0
			20,1 - 40,0						-	rs50/oxk/r20,1-40,0
			40,1 - 46,0						-	rs50/oxk/r40,1-46,0
	Wrench								✔	10008179
	Guide ring for feed tube	●							-	273e/f-c
	Segmented collet		4,0 - 42,0	Smooth		59,57		39	✔	sz42r4,0-42,0
			7,0 - 9,0						-	sz42v7,0-9,0
			10,0 - 29,0						-	sz42v10,0-29,0
			7,0 - 9,0						✔	sz42s7,0-9,0
			10,0 - 36,0						✔	sz42s10,0-36,0
	Segmented collet for machining to size				8				✔	10013417
					15				✔	10013415
					30				✔	10013416
	Spindle head adapter plate								✔	10001419

SPH = special cast coating; KSB = plastic coating; OXK = oxidized ceramic coating

TRAUB

TOPlus mini chuck for TRAUB

Size	Variant	Machine type	Ø Capacity [mm]	Spindle nose	Connecting thread outside	In stock	Material no.
40	Deadlength	TNL32 GSP	33	A2-4	M42 x 1,5 - LH	✔	10000600

Machine spindle standard DIN ISO 702-1.

SPANNTOP nova chuck for TRAUB

Size	Variant	Machine type	Ø Capacity [mm]	Spindle nose	Connecting thread inside	In stock	Material no.
65	Modular	TNX 65/42	67	A2-6	M75 x 1,5	-	10001839

Machine spindle standard DIN 55026.

SPANNTOP chuck for TRAUB

Size	Variant	Machine type	Ø Capacity [mm]	Spindle nose	Connecting thread outside	Connecting thread inside	In stock	Material no.
36	Combi deadlength	TNK36 GS	36	A2-4	M42 x 1,5		-	10001717
42	Combi deadlength	TNC 42	46	A2-5		M54 x 1,5	-	10001709
65	Combi deadlength	TNC 65 / TNX 65-D65	67	A2-6	M74 x 1,5		✔	10001710
	Modular	TNA 300/400-65 / TND350/G / TND 400 / TNS 65				M74 x 1,5	-	10001683

Machine spindle standard DIN 55026.

TRAUB TNK26/32. Machine specific chucks incl. accessories - main spindle

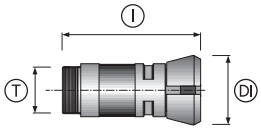

Product	Profile	Clamping range [mm] A	Head Ø [mm] DI	Connecting thread outside T	Total length [mm] l	In stock	Material no.
Basic body			69,7	M42 x 1,5 - LH	132,3	✔	1105/0005
Clamping head ZW	●	4 – 36	69,7			✔	sk6970zwr4,0-36,0
	■	7 – 9				-	sk6970zwv7,0-9,0
		10 – 24				-	sk6970zwv10,0-24,0
	⬢	7 – 9				✔	SK6970ZWS7,0-9,0
		10 – 30				✔	sk6970zws10,0-30,0
Manual changing fixture						✔	10006985
Assembling aid						✔	10006685

TRAUB TNK26/32. Machine specific chucks incl. accessories - sub spindle

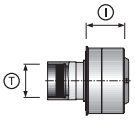

Product	Profile	Clamping range [mm] A	Head Ø [mm] DI	Connecting thread outside T	Total length [mm] l	In stock	Material no.
Machine specific SPANNTOP chucks				M42 x 1,5	90	-	10001717
Clamping head ZWG	●	4 – 36	69,7			✔	sk6970zwgr4,0-36,0
	■	7 – 9				-	sk6970zwgv7,0-9,0
		10 – 24				-	sk6970zwgv10,0-24,0
	⬢	7 – 9				-	sk6970zwgs7,0-9,0
		10 – 30				-	sk6970zwgs10,0-30,0

TRAUB TNK26/32

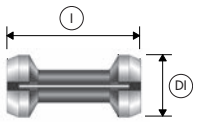

Product	Profile	Clamping range [mm] A	Head Ø [mm] DI	Total length [mm] l	In stock	Material no.
Segmented collet	●	5 – 32	42	90	✔	sb.d/0001r5,0-32,0
	■	8 – 22			-	sb.d/0001v8,0-22,0
	⬢	8 – 27			-	sb.d/0001s8,0-27,0

LEHMANN

TOPlus mini chuck for pl Lehmann rotary indexing tables

Size	Variant	Type	Spindle nose	In stock	Material no.
26	Pull-back	507	HSK-A63	-	10001281
	Deadlength	91x	A2-5	-	10018251
		507	HSK-A63	-	10001285
40	Pull-back	91x	A2-5	-	10018230
	Deadlength			-	10018252
52	Pull-back	510	HSK-A63	-	10001282
		520		-	10001283
	Deadlength		A2-5	-	10001287
		91x		-	10018708
		510	HSK-A63	-	10001286
65	Pull-back	530	A2-8	-	10001284
	Deadlength			-	10001288

Incl. drawtube adapter for direct assembly on the rotary indexing table.

SPANNTOP mini chuck for pl Lehmann rotary indexing tables

Size	Variant	Type	Spindle nose	In stock	Material no.
32	Pull-back	507	HSK-A63	-	10001289
	Deadlength			-	10001293
52	Pull-back	520	A2-5	-	10001291
		510	HSK-A63	-	10001290
	Deadlength	520	A2-5	-	10001295
		510	HSK-A63	-	10001294
65	Pull-back	530	A2-8	-	10001292
	Deadlength			-	10001296

Incl. drawtube adapter for direct assembly on the rotary indexing table.

TOROK manual chuck for pl Lehmann rotary indexing tables

Product line	Size	Type	Spindle nose	In stock	Material no.
SE	52	520	A2-5	-	10001301
		510	HSK-A63	-	10001300
	65	530	A2-8	-	10001302
RD	52	520	A2-5	-	10001298
		510	HSK-A63	-	10001297
	65	530	A2-8	-	10001299

Machine specific chucks

Overview

Find what's important fast





Mandrels

	Mandrel MANDO	176
	Mandrel MANDO G	210
	Mandrel MAXXOS	214
	Mandrel actuating units ms dock / hs dock	226
	Machine specific mandrels	234

Standard mandrels in overview

	MANDO T211	MANDO T212	MANDO T812
			
Description	Pull-back / with draw bolt	Pull-back / without draw bolt for blind bores	Deadlength / without draw bolt for pick-off with the sub spindle
Sizes	0, 1, 2, 3, 4, 5, 6, 7	XXS, XS, S, 0, 1, 2, 3, 4, 5, 6, 7	XXS, XS, S, 0, 1, 2, 3, 4
Clamping range of all sizes [mm]	20 – 200	8 – 190	8 – 100
Variant	RD [round]	RD [round]	RD [round]
Advantages	■ Workpiece stabilization through axial draw force applied against the workpiece end-stop ■ Less expensive segmented clamping bushings and end-stops compared to MANDO T212	■ Workpiece stabilization through axial draw force applied against the workpiece end-stop ■ Clamping without draw bolt, consequently ideal for blind bores	■ Radial clamping, no pull-back against workpiece end-stop – ideal for pick-off from the main spindle ■ Clamping without draw bolt, consequently ideal for blind bores
Clamping elements	 Segmented clamping bushing RD	 Segmented clamping bushing RD	 Segmented clamping bushing RD
	Page 176	Page 176	Page 176

MANDO G211	MAXXOS T211	Actuating unit ms dock and hs dock
		
Pull-back / with draw bolt for gear hobbing, shaping and grinding	Pull-back / with draw bolt for the highest accuracy and process reliability	Actuating unit for stationary mandrel clamping
0, 1, 2, 3, 4	A, B, C, D, E, F	XXS – 7 / A – F
20 – 120	18 – 100	8 – 200
RD [round]	SE [hexagonal]	Manual, hydraulic
■ Standard segmented mandrel with slim interference contour ■ Rigid radial clamping with pull-back effect ■ Large clamping range and vibration dampening due to vulcanized clamping elements ■ Three end-stop levels	■ I.D. clamping mandrel for clamping diameter 18 mm to 100 mm, in stock ■ High transferable torques and holding forces ■ Reduced tool wear through high rigidity ■ Run-out accuracy ≤ 0.01 mm / 0.007 mm possible	■ Mandrels can be used on machining center ■ ms dock rotating for lathes without clamping cylinder ■ Manual / hydraulic mandrel actuation ■ Ideal for 5-sided machining
 Segmented clamping bushing RD	 Segmented clamping bushing SE	
Page 210	**Page 214**	**Page 226**

MANDO

Efficient and economical



Often complete machining fails for lack of an effective I.D. clamping device. In many cases the jaw chuck is a makeshift solution. However, even conventional mandrels with slotted clamping sleeves quickly reach their limits in terms of accuracy, rigidity, and opening stroke. HAINBUCH segmented mandrels use state-of-the-art clamping technology that is convincing, even in the most critical applications.

The central element is the vulcanized segmented clamping bushing. Because conventional clamping bushings are made of spring steel and are only annealed to spring hardness, they are »soft« and they must »bend« to clamp the workpiece. HAINBUCH segmented bushings, on the other hand, are made of case-hardened chromium-nickel-steel and have segments that are extremely hard, wear resistant and rigid. All contact surfaces are completely ground in one operation guaranteeing optimum run-out accuracy.

Key advantages

- Extremely high clamping force even at the smallest clamping Ø
- Clamping range Ø 8 – 200 mm
- Large clamping range and vibration dampening due to vulcanized clamping elements
- Standard segmented clamping bushings and workpiece end-stops for machining to size available



Mandrel MANDO T211 in use

Mandrel MANDO

MANDO segmented mandrels at a glance

	MANDO T211	MANDO T212	MANDO T812
			
Description	Pull-back / with draw bolt	Pull-back / without draw bolt for blind bores	Deadlength / without draw bolt for pick-off with the sub spindle
Sizes	0, 1, 2, 3, 4, 5, 6, 7	XXS, XS, S, 0, 1, 2, 3, 4, 5, 6, 7	XXS, XS, S, 0, 1, 2, 3, 4
Clamping range of all sizes [mm]	20 – 200	8 – 190	8 – 100
Actuation	Draw	Draw	Pressure
Advantages	■ Workpiece stabilization through axial draw force applied against the workpiece end-stop ■ Less expensive segmented clamping bushings and end-stops compared to MANDO T212	■ Workpiece stabilization through axial draw force applied against the workpiece end-stop ■ Clamping without draw bolt, consequently ideal for blind bores	■ Radial clamping, no pull-back against workpiece end-stop – ideal for pick-off from the main spindle ■ Clamping without draw bolt, consequently ideal for blind bores
Clamping elements	 Segmented clamping bushing RD	 Segmented clamping bushing RD	 Segmented clamping bushing RD

MANDO T211 in detail

Designation	
1 Vulcanized segmented clamping bushing made of case-hardened steel [60 HRC] 2 Draw bolt [with safeguard to prevent unscrewing when in open position] 3 End-stop 4 Integrated ejector pins for forced opening of the clamping 5 Spindle flange suitable for all standard mandrel sizes 6 Torsional safety lock of segmented clamping bushing	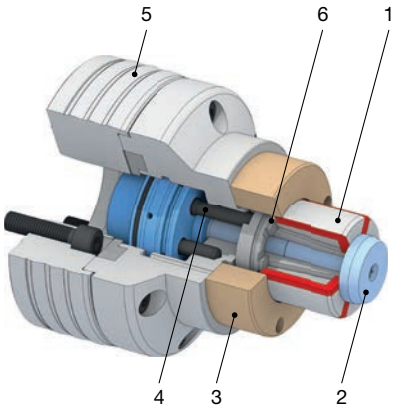

MANDO T212 in detail

Designation	
1 Vulcanized segmented clamping bushing made of case-hardened steel [60 HRC] 2 Installation aid, recommended for vertical machines from mandrel size 2 and up 3 Torsional safety lock of segmented clamping bushing 4 Coupling ring for fast changing of the segmented clamping bushing 5 Crown-coupling 6 Spindle flange suitable for all standard mandrel sizes 7 End-stop	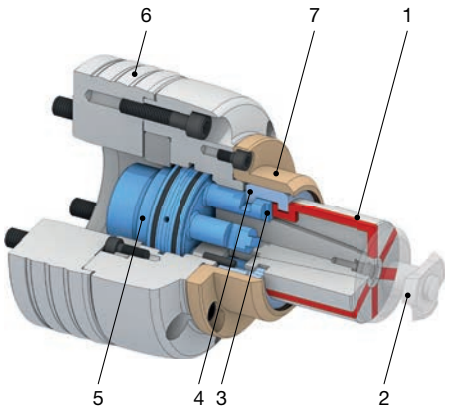

MANDO T812 in detail

Designation	
1 Vulcanized segmented clamping bushing made of case-hardened steel [60 HRC] 2 Installation aid, recommended for vertical machines from mandrel size 2 and up 3 Torsional safety lock of segmented clamping bushing 4 Coupling ring for fast changing of the segmented clamping bushing 5 Mandrel body including coupling 6 Spindle flange suitable for all standard mandrel sizes 7 End-stop	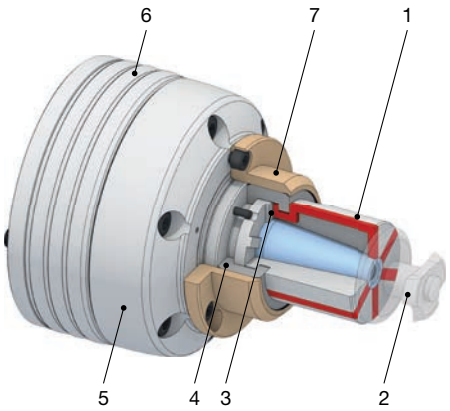

Mandrel MANDO

Order overview. MANDO mandrels

Product	Size	Clamping range [mm]	In stock	Material no.
MANDO T211	0	20 – 28	✔	10001871
	1	26 – 38	✔	10001872
	2	36 – 54	✔	10001873
	3	50 – 80	✔	10001874
	4	69 – 120	✔	10001876
	5	100 – 130	✔	10001870
	6	130 – 160	✔	10001882
	7	160 – 200	✔	10001883
MANDO T212	XXS	8 – 13	✔	10001890
	XS	13 – 19	✔	10001891
	S	16 – 21	✔	10001892
	0	20 – 28	✔	10001893
	1	26 – 38	✔	10001894
	2	36 – 54	✔	10001895
	3	50 – 80	✔	10001896
	4	69 – 100	✔	10001897
	5	100 – 130	✔	10001888
	6	130 – 160	✔	10001889
	7	160 – 190	✔	10001906
MANDO T812	XXS	8 – 13	✔	10000545
	XS	13 – 19	✔	10000546
	S	16 – 21	✔	10000547
	0	20 – 28	✔	10000548
	1	26 – 38	✔	10000549
	2	36 – 54	✔	10000550
	3	50 – 80	✔	10000551
	4	69 – 100	✔	10000552

Mandrels without spindle flange.

MANDO T211 size 0. Technical data

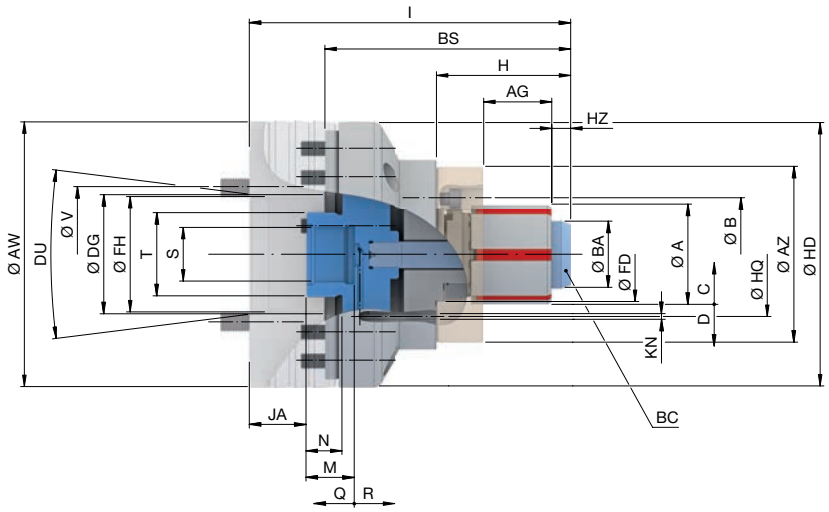

Size		0							
Clamping range [mm]	A	20 – 28							
Spindle nose	DU	A2-4	A2-5	A2-6	A2-8	AP120	AP140	AP170	AP220
Run-out ≤ [mm]		0,010							
Max. radial clamping force [kN]		42							
Max. axial drawtube force [pull / push] [kN]		10							
Max. clamping length [mm]	AG	22							
Reserve stroke in Ø [mm]	D	0,3							
Release stroke in Ø [mm]	C	0,4							
RPM n max. [1/min.]		7000							
Reserve stroke axial [mm]	Q	1,5							
Release stroke axial [mm]	R	2							
Max. actuating torque [Nm]	BC	10							
Draw bolt Ø [mm]	BA	19							
Draw bolt head height [mm]	HZ	7,5							
Reception workpiece end-stop	FD	Ø 32 f7							
End-stop outer Ø [mm]	AZ	65							
Bolt hole circle end-stop	B	LK Ø 50 [3 x M6]							
Length [mm]	H	40							
Length 2 [mm]	BS	100							
Total length [mm]	I	140			144	140			
Connecting thread inside	S	M30 x 1,5							
Connecting thread outside	T	M44 x 1,5							
Distance [mm]	JA	30			34	30			
Depth of thread [mm]	M	25,5							
Thread length [mm]	N	19							
Max. drawtube Ø [mm]	DG	54							
Minimum length of DG [mm]		13							
Bore-Ø	FH	61	79,6	103,2	100	77	80	103	
Bolt hole circle	V	LK Ø 82,6 [3 x M10]	LK Ø 104,8 [6 x M10]	LK Ø 133,4 [6 x M12]	LK Ø 171,4 [6 x M16]	LK Ø 104,8 [6 x M10]		LK Ø 133,4 [6 x M12]	LK Ø 171,4 [6 x M16]
Outer Ø [mm]	AW	140		165	210	140	150	180	230
Outer Ø 2 [mm]	HD	139							
Air sensing control bolt hole circle-Ø [mm]	HQ	64							
Air sensing control bore Ø [mm]	KN	3							
Central air sensing connection Ø optional [mm]		12 H7							
Weight [kg]		8,5	7,9	8,9	13,7	8,1	8,7	10,5	16


Segmented clamping bushings
Page 442


Flanges
Page 208


Actuating units
Page 226


Accessory overview
Page 478

Scope of delivery

- Mandrel without spindle flange / without air sensing adapter
- Draw bolt

Mandrel MANDO

MANDO T211 size 1. Technical data

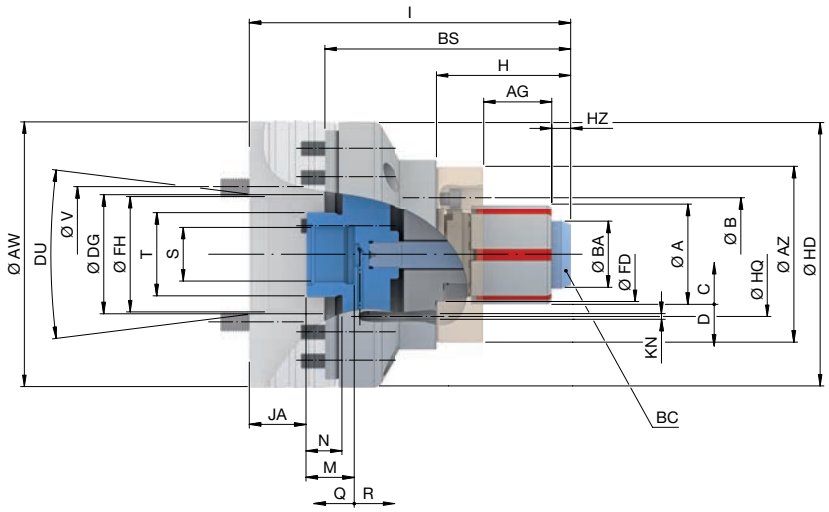

Size		1							
Clamping range [mm]	A	26 – 38							
Spindle nose	DU	A2-4	A2-5	A2-6	A2-8	AP120	AP140	AP170	AP220
Run-out ≤ [mm]		0,010							
Max. radial clamping force [kN]		42							
Max. axial drawtube force [pull / push] [kN]		10							
Max. clamping length [mm]	AG	26							
Reserve stroke in Ø [mm]	D	0,3							
Release stroke in Ø [mm]	C	0,4							
RPM n max. [1/min.]		7000							
Reserve stroke axial [mm]	Q	1,5							
Release stroke axial [mm]	R	2							
Max. actuating torque [Nm]	BC	20							
Draw bolt Ø [mm]	BA	25							
Draw bolt head height [mm]	HZ	11							
Reception workpiece end-stop	FD	Ø 41 f7							
End-stop outer Ø [mm]	AZ	69							
Bolt hole circle end-stop	B	LK Ø 55 [3 x M6]							
Length [mm]	H	51							
Length 2 [mm]	BS	110							
Total length [mm]	I	150			154	150			
Connecting thread inside	S	M30 x 1,5							
Connecting thread outside	T	M44 x 1,5							
Distance [mm]	JA	30			34	30			
Depth of thread [mm]	M	25,5							
Thread length [mm]	N	19							
Max. drawtube Ø [mm]	DG	54							
Minimum length of DG [mm]		13							
Bore-Ø	FH	61	79,6	103,2	100	77	80	103	
Bolt hole circle	V	LK Ø 82,6 [3 x M10]	LK Ø 104,8 [6 x M10]	LK Ø 133,4 [6 x M12]	LK Ø 171,4 [6 x M16]	LK Ø 104,8 [6 x M10]		LK Ø 133,4 [6 x M12]	LK Ø 171,4 [6 x M16]
Outer Ø [mm]	AW	140		165	210	140	150	180	230
Outer Ø 2 [mm]	HD	139							
Air sensing control bolt hole circle-Ø [mm]	HQ	64							
Air sensing control bore Ø [mm]	KN	3							
Central air sensing connection Ø optional [mm]		12 H7							
Weight [kg]		8,6	8	9	13,8	8,2	8,8	10,6	16,1


Segmented clamping bushings
Page 442


Flanges
Page 208


Actuating units
Page 226


Accessory overview
Page 478

Scope of delivery

- Mandrel without spindle flange / without air sensing adapter
- Draw bolt

MANDO T211 size 2. Technical data

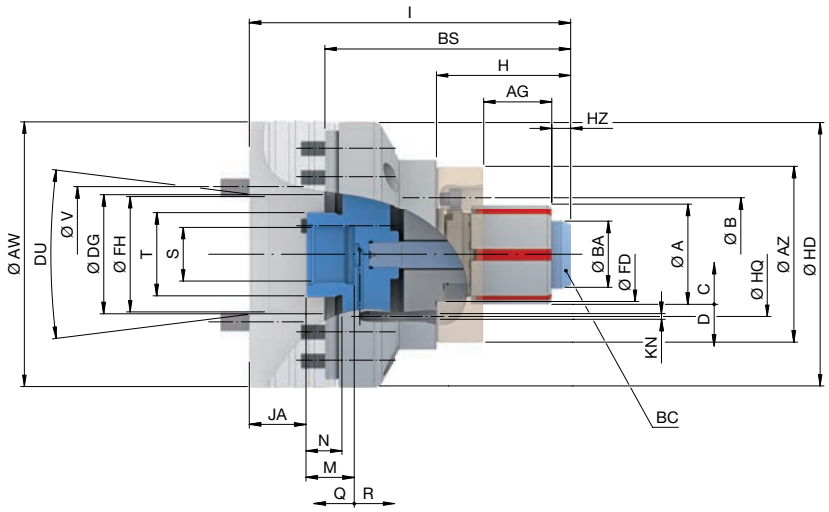

Size		2							
Clamping range [mm]	A	36 – 54							
Spindle nose	DU	A2-4	A2-5	A2-6	A2-8	AP120	AP140	AP170	AP220
Run-out ≤ [mm]		0,010							
Max. radial clamping force [kN]		85							
Max. axial drawtube force [pull / push] [kN]		20							
Max. clamping length [mm]	AG	43							
Reserve stroke in Ø [mm]	D	0,3							
Release stroke in Ø [mm]	C	0,5							
RPM n max. [1/min.]		7000							
Reserve stroke axial [mm]	Q	1,5							
Release stroke axial [mm]	R	2,5							
Max. actuating torque [Nm]	BC	25							
Draw bolt Ø [mm]	BA	35							
Draw bolt head height [mm]	HZ	10							
Reception workpiece end-stop	FD	Ø 50 f7							
End-stop outer Ø [mm]	AZ	93							
Bolt hole circle end-stop	B	LK Ø 78 [3 x M6]							
Length [mm]	H	71							
Length 2 [mm]	BS	130							
Total length [mm]	I	170			174	170			
Connecting thread inside	S	M30 x 1,5							
Connecting thread outside	T	M44 x 1,5							
Distance [mm]	JA	30			34	30			
Depth of thread [mm]	M	25,5							
Thread length [mm]	N	19							
Max. drawtube Ø [mm]	DG	54							
Minimum length of DG [mm]		13							
Bore-Ø	FH	61	79,6	103,2	100	77	80	103	
Bolt hole circle	V	LK Ø 82,6 [3 x M10]	LK Ø 104,8 [6 x M10]	LK Ø 133,4 [6 x M12]	LK Ø 171,4 [6 x M16]	LK Ø 104,8 [6 x M10]		LK Ø 133,4 [6 x M12]	LK Ø 171,4 [6 x M16]
Outer Ø [mm]	AW	140		165	210	140	150	180	230
Outer Ø 2 [mm]	HD	139							
Air sensing control bolt hole circle-Ø [mm]	HQ	76							
Air sensing control bore Ø [mm]	KN	3							
Central air sensing connection Ø optional [mm]		12 H7							
Weight [kg]		9,3	8,7	9,7	14,5	8,9	9,5	11,3	16,8


Segmented clamping bushings
Page 442


Flanges
Page 208


Actuating units
Page 226


Accessory overview
Page 478

Scope of delivery

- Mandrel without spindle flange / without air sensing adapter
- Draw bolt

MANDO T211 size 3. Technical data

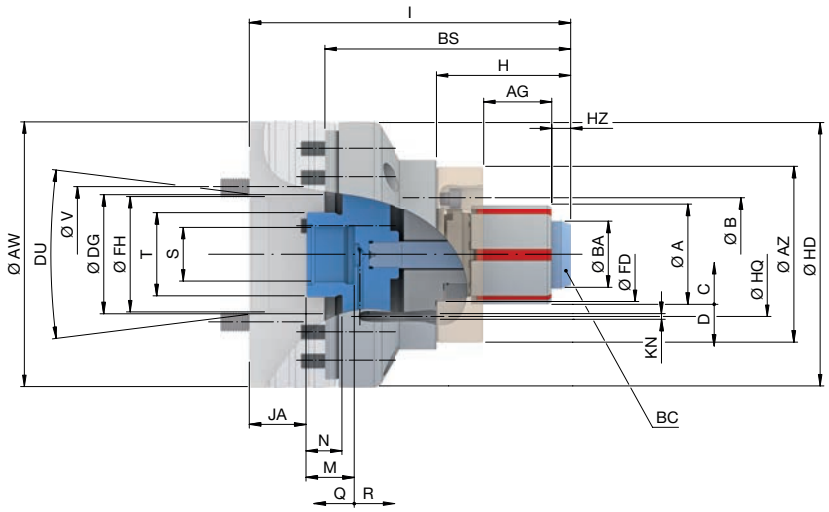

Size		3							
Clamping range [mm]	A	50 – 80							
Spindle nose	DU	A2-4	A2-5	A2-6	A2-8	AP120	AP140	AP170	AP220
Run-out ≤ [mm]		0,010							
Max. radial clamping force [kN]		105							
Max. axial drawtube force [pull / push] [kN]		25							
Max. clamping length [mm]	AG	49							
Reserve stroke in Ø [mm]	D	0,4							
Release stroke in Ø [mm]	C	0,5							
RPM n max. [1/min.]		6000							
Reserve stroke axial [mm]	Q	2							
Release stroke axial [mm]	R	2,5							
Max. actuating torque [Nm]	BC	55							
Draw bolt Ø [mm]	BA	49							
Draw bolt head height [mm]	HZ	11							
Reception workpiece end-stop	FD	Ø 65 f7							
End-stop outer Ø [mm]	AZ	96							
Bolt hole circle end-stop	B	LK Ø 80 [3 x M6]							
Length [mm]	H	78							
Length 2 [mm]	BS	140							
Total length [mm]	I	180			184	180			
Connecting thread inside	S	M30 x 1,5							
Connecting thread outside	T	M44 x 1,5							
Distance [mm]	JA	30			34	30			
Depth of thread [mm]	M	25,5							
Thread length [mm]	N	19							
Max. drawtube Ø [mm]	DG	54							
Minimum length of DG [mm]		13							
Bore-Ø	FH	61	79,6	103,2	100	77	80	103	
Bolt hole circle	V	LK Ø 82,6 [3 x M10]	LK Ø 104,8 [6 x M10]	LK Ø 133,4 [6 x M12]	LK Ø 171,4 [6 x M16]	LK Ø 104,8 [6 x M10]		LK Ø 133,4 [6 x M12]	LK Ø 171,4 [6 x M16]
Outer Ø [mm]	AW	140		165	210	140	150	180	230
Outer Ø 2 [mm]	HD	139							
Air sensing control bolt hole circle-Ø [mm]	HQ	78							
Air sensing control bore Ø [mm]	KN	3							
Central air sensing connection Ø optional [mm]		12 H7							
Weight [kg]		10,1	9,5	10,5	15,3	9,7	10,3	12,1	17,6


Segmented clamping bushings Page 442
Flanges Page 208
Actuating units Page 226
Accessory overview Page 478

Scope of delivery

- Mandrel without spindle flange / without air sensing adapter
- Draw bolt

MANDO T211 size 4. Technical data

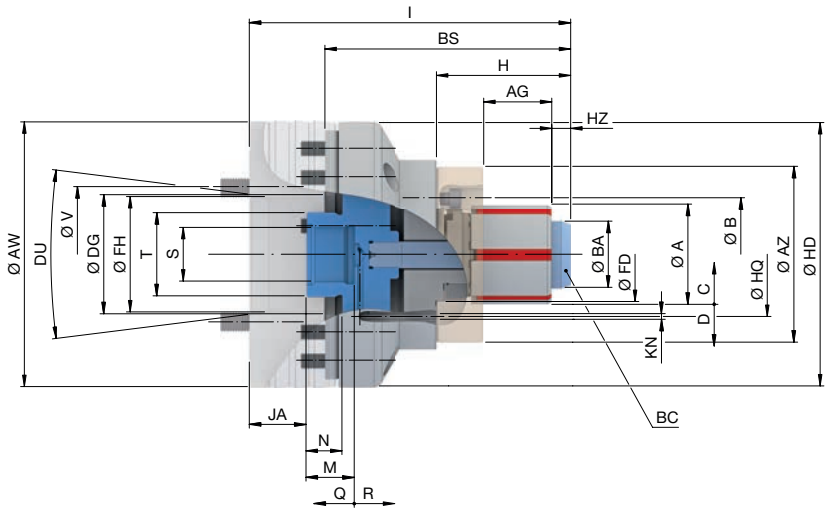

Size		4							
Clamping range [mm]	A	69 – 120							
Spindle nose	DU	A2-4	A2-5	A2-6	A2-8	AP120	AP140	AP170	AP220
Run-out ≤ [mm]		0,010							
Max. radial clamping force [kN]		150							
Max. axial drawtube force [pull / push] [kN]		35							
Max. clamping length [mm]	AG	59							
Reserve stroke in Ø [mm]	D	0,5							
Release stroke in Ø [mm]	C	0,6							
RPM n max. [1/min.]		6000							
Reserve stroke axial [mm]	Q	2,5							
Release stroke axial [mm]	R	3							
Max. actuating torque [Nm]	BC	55							
Draw bolt Ø [mm]	BA	68							
Draw bolt head height [mm]	HZ	16							
Reception workpiece end-stop	FD	Ø 78 f7							
End-stop outer Ø [mm]	AZ	100							
Bolt hole circle end-stop	B	LK Ø 90 [3 x M6]							
Length [mm]	H	98							
Length 2 [mm]	BS	155							
Total length [mm]	I	195			199	195			
Connecting thread inside	S	M30 x 1,5							
Connecting thread outside	T	M44 x 1,5							
Distance [mm]	JA	30			34	30			
Depth of thread [mm]	M	27							
Thread length [mm]	N	19							
Max. drawtube Ø [mm]	DG	60							
Minimum length of DG [mm]		13							
Bore-Ø	FH	61	79,6	103,2	100	77	80	103	
Bolt hole circle	V	LK Ø 82,6 [3 x M10]	LK Ø 104,8 [6 x M10]	LK Ø 133,4 [6 x M12]	LK Ø 171,4 [6 x M16]	LK Ø 104,8 [6 x M10]		LK Ø 133,4 [6 x M12]	LK Ø 171,4 [6 x M16]
Outer Ø [mm]	AW	140		165	210	140	150	180	230
Outer Ø 2 [mm]	HD	139							
Air sensing control bolt hole circle-Ø [mm]	HQ	91							
Air sensing control bore Ø [mm]	KN	3							
Central air sensing connection Ø optional [mm]		12 H7							
Weight [kg]		11,3	10,7	11,7	16,5	10,9	11,5	13,3	18,8

For size 4, clamping range 101 - 120 mm, a max. speed of 4200 RPM applies.

			
Segmented clamping bushings Page 442	Flanges Page 208	Actuating units Page 226	Accessory overview Page 478

Scope of delivery

- Mandrel without spindle flange / without air sensing adapter
- Draw bolt

MANDO T211 size 5. Technical data

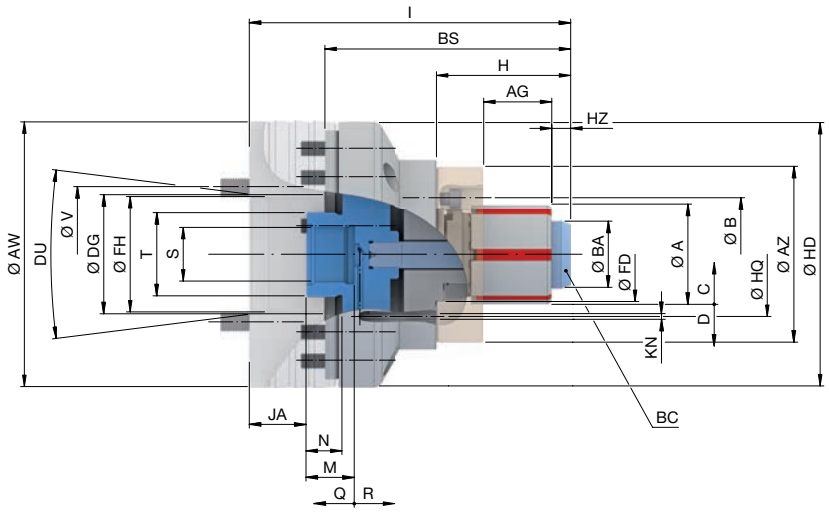

Size		5		
Clamping range [mm]	A	**100 – 130**		
Spindle nose	DU	A2-6	A2-8	A2-11
Run-out ≤ [mm]		0,010		
Max. radial clamping force [kN]		170		
Max. axial drawtube force [pull / push] [kN]		40		
Max. clamping length [mm]	AG	86		
Reserve stroke in Ø [mm]	D	0,6		
Release stroke in Ø [mm]	C	0,6		
RPM n max. [1/min.]		5000		
Reserve stroke axial [mm]	Q	3		
Release stroke axial [mm]	R	3		
Max. actuating torque [Nm]	BC	65		
Draw bolt Ø [mm]	BA	97		
Draw bolt head height [mm]	HZ	16		
Reception workpiece end-stop	FD	Ø 102 f7		
End-stop outer Ø [mm]	AZ	150		
Bolt hole circle end-stop	B	LK Ø 117 [3 x M6]		
Length [mm]	H	120		
Length 2 [mm]	BS	195		
Total length [mm]	I	258,5	262,5	268,5
Connecting thread inside	S	M30 x 1,5		
Connecting thread outside	T	M44 x 1,5		
Distance [mm]	JA	53,5	57,5	63,5
Depth of thread [mm]	M	25,5		
Thread length [mm]	N	19		
Max. drawtube Ø [mm]	DG	97		
Minimum length of DG [mm]		12		
Bore-Ø	FH	103,2	136,2	155
Bolt hole circle	V	LK Ø 133,4 [6 x M12]	LK Ø 171,4 [6 x M16]	LK Ø 235 [6 x M20]
Outer Ø [mm]	AW	235		280
Outer Ø 2 [mm]	HD	230		
Air sensing control bolt hole circle-Ø [mm]	HQ	116		
Air sensing control bore Ø [mm]	KN	3		
Weight [kg]		36	35	45


Segmented clamping bushings
Page 442


Flanges
Page 208


Actuating units
Page 226


Accessory overview
Page 478

Scope of delivery

- Mandrel without spindle flange / without air sensing adapter
- Draw bolt

MANDO T211 size 6. Technical data

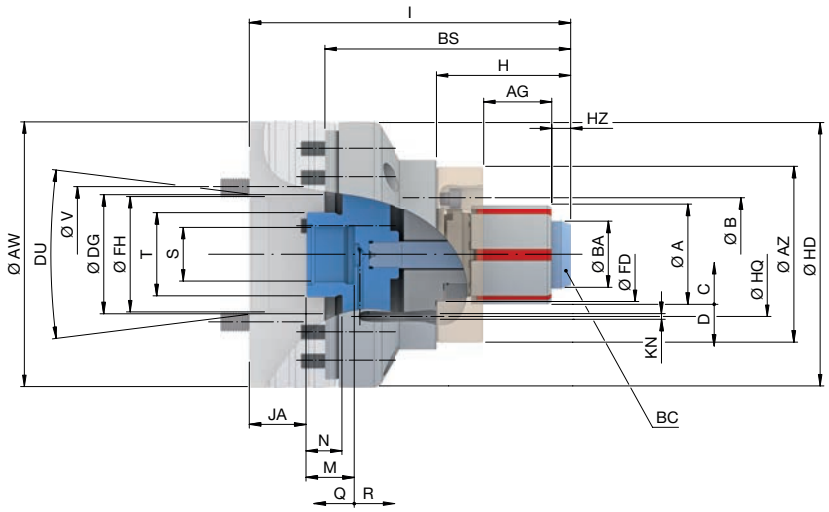

Size		6		
Clamping range [mm]	A	**130 – 160**		
Spindle nose	DU	A2-6	A2-8	A2-11
Run-out ≤ [mm]		0,010		
Max. radial clamping force [kN]		170		
Max. axial drawtube force [pull / push] [kN]		40		
Max. clamping length [mm]	AG	96		
Reserve stroke in Ø [mm]	D	0,6		
Release stroke in Ø [mm]	C	0,6		
RPM n max. [1/min.]		4000		
Reserve stroke axial [mm]	Q	3		
Release stroke axial [mm]	R	3		
Max. actuating torque [Nm]	BC	65		
Draw bolt Ø [mm]	BA	125		
Draw bolt head height [mm]	HZ	25		
Reception workpiece end-stop	FD	Ø 132 f7		
End-stop outer Ø [mm]	AZ	180		
Bolt hole circle end-stop	B	LK Ø 148 [3 x M6]		
Length [mm]	H	137		
Length 2 [mm]	BS	220		
Total length [mm]	I	283,5	287,5	293,5
Connecting thread inside	S	M30 x 1,5		
Connecting thread outside	T	M44 x 1,5		
Distance [mm]	JA	53,5	57,5	63,5
Depth of thread [mm]	M	25,5		
Thread length [mm]	N	19		
Max. drawtube Ø [mm]	DG	120		
Minimum length of DG [mm]		12		
Bore-Ø	FH	103,2	136,2	155
Bolt hole circle	V	LK Ø 133,4 [6 x M12]	LK Ø 171,4 [6 x M16]	LK Ø 235 [6 x M20]
Outer Ø [mm]	AW	235		280
Outer Ø 2 [mm]	HD	230		
Air sensing control bolt hole circle-Ø [mm]	HQ	146		
Air sensing control bore Ø [mm]	KN	3		
Weight [kg]		43		53


Segmented clamping bushings
Page 442


Flanges
Page 208


Actuating units
Page 226


Accessory overview
Page 478

Scope of delivery

- Mandrel without spindle flange / without air sensing adapter
- Draw bolt

MANDO T211 size 7. Technical data

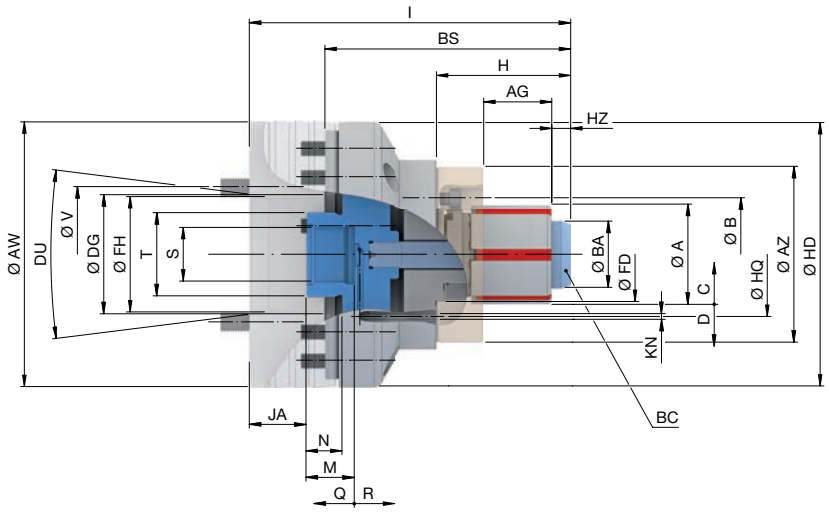

Size		7		
Clamping range [mm]	A	**160 – 200**		
Spindle nose	DU	A2-6	A2-8	A2-11
Run-out ≤ [mm]		0,020		
Max. radial clamping force [kN]		170		
Max. axial drawtube force [pull / push] [kN]		45		
Max. clamping length [mm]	AG	94		
Reserve stroke in Ø [mm]	D	0,6		
Release stroke in Ø [mm]	C	0,8		
RPM n max. [1/min.]		3200		
Reserve stroke axial [mm]	Q	3		
Release stroke axial [mm]	R	3		
Max. actuating torque [Nm]	BC	65		
Draw bolt Ø [mm]	BA	156		
Draw bolt head height [mm]	HZ	29,5		
Reception workpiece end-stop	FD	Ø 162 f7		
End-stop outer Ø [mm]	AZ	220		
Bolt hole circle end-stop	B	LK Ø 177 [3 x M8]		
Length [mm]	H	155		
Length 2 [mm]	BS	245		
Total length [mm]	I	308,5	312,5	318,5
Connecting thread inside	S	M30 x 1,5		
Connecting thread outside	T	M44 x 1,5		
Distance [mm]	JA	53,5	57,5	63,5
Depth of thread [mm]	M	25,5		
Thread length [mm]	N	19		
Max. drawtube Ø [mm]	DG	140		
Minimum length of DG [mm]		12		
Bore-Ø	FH	103,2	136,2	155
Bolt hole circle	V	LK Ø 133,4 [6 x M12]	LK Ø 171,4 [6 x M16]	LK Ø 235 [6 x M20]
Outer Ø [mm]	AW	235		280
Outer Ø 2 [mm]	HD	230		
Air sensing control bolt hole circle-Ø [mm]	HQ	175		
Air sensing control bore Ø [mm]	KN	3		
Weight [kg]		55	54	64


Segmented clamping bushings
Page 442


Flanges
Page 208


Actuating units
Page 226


Accessory overview
Page 478

Scope of delivery

- Mandrel without spindle flange / without air sensing adapter
- Draw bolt

MANDO T212 size XXS. Technical data

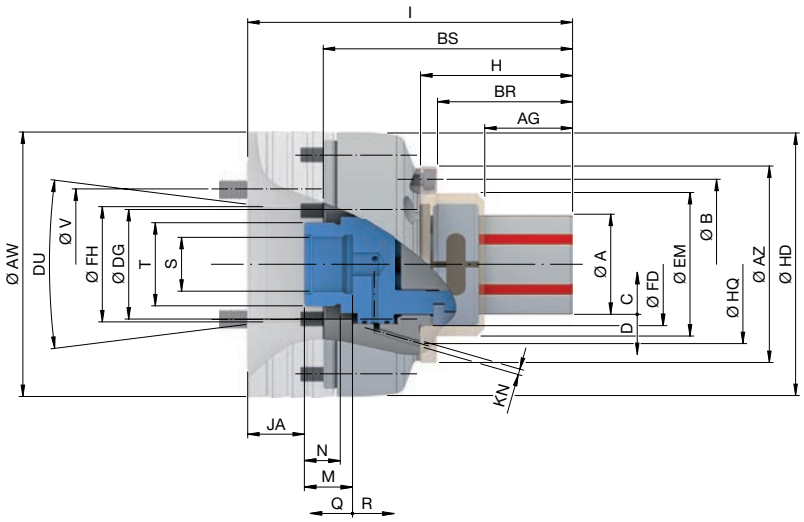

Size		XXS							
Clamping range [mm]	A	8 – 13							
Spindle nose	DU	A2-4	A2-5	A2-6	A2-8	AP120	AP140	AP170	AP220
Run-out ≤ [mm]		0,020							
Max. radial clamping force [kN]		42							
Max. axial drawtube force [pull / push] [kN]		10							
Max. clamping length [mm]	AG	12,9							
Reserve stroke in Ø [mm]	D	0,2							
Release stroke in Ø [mm]	C	0,2							
RPM n max. [1/min.]		7000							
Reserve stroke axial [mm]	Q	1,5							
Release stroke axial [mm]	R	1,5							
Reception workpiece end-stop	FD	Ø 34 f7							
End-stop outer Ø [mm]	AZ	65							
End-stop outer Ø 2 [mm]	EM	41							
Bolt hole circle end-stop	B	LK Ø 53 [3 x M5]							
Length [mm]	H	45,5							
Length 2 [mm]	BS	100,5							
Total length [mm]	I	140,5			144,5	140			
Depth [mm]	BR	36,50							
Connecting thread inside	S	M30 x 1,5							
Connecting thread outside	T	M44 x 1,5							
Distance [mm]	JA	30			34	30			
Depth of thread [mm]	M	25,5							
Thread length [mm]	N	19							
Max. drawtube Ø [mm]	DG	54							
Minimum length of DG [mm]		13							
Bore-Ø	FH	61	79,6	103,2	100	77	80	103	
Bolt hole circle	V	LK Ø 82,6 [3 x M10]	LK Ø 104,8 [6 x M10]	LK Ø 133,4 [6 x M12]	LK Ø 171,4 [6 x M16]	LK Ø 104,8 [6 x M10]		LK Ø 133,4 [6 x M12]	LK Ø 171,4 [6 x M16]
Outer Ø [mm]	AW	140		165	210	140	150	180	230
Outer Ø 2 [mm]	HD	139							
Air sensing control bolt hole circle-Ø [mm]	HQ	56							
Air sensing control bore Ø [mm]	KN	3							
Central air sensing connection Ø optional [mm]		12 H7							
Weight [kg]		9,1	8,5	9,5	14,3	8,7	9,3	11,1	16,6

Please note: The maximum clamping length [AG] varies from 6 to 12.9 mm depending on the clamping diameter.

			
Segmented clamping bushings Page 442	Flanges Page 208	Actuating units Page 226	Accessory overview Page 478

Scope of delivery

- Mandrel without spindle flange / without air sensing adapter
- Coupling ring
- Mounting aid depending on size

MANDO T212 size XS. Technical data

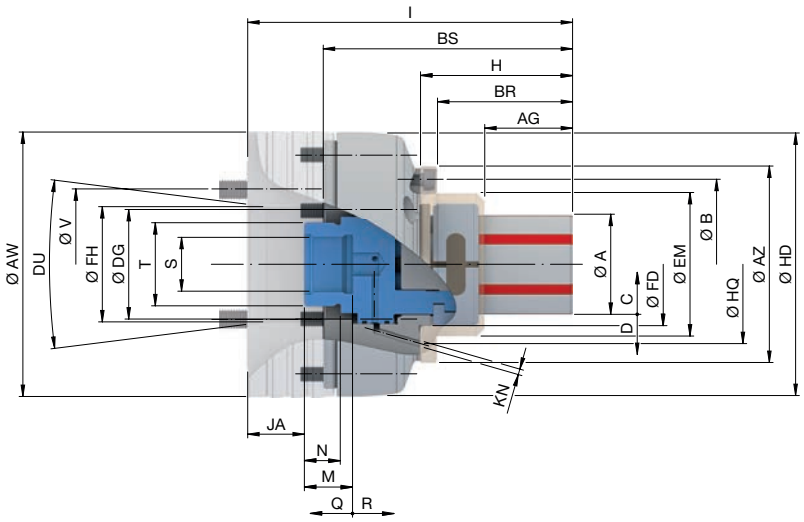

Size		XS							
Clamping range [mm]	A	13 – 19							
Spindle nose	DU	A2-4	A2-5	A2-6	A2-8	AP120	AP140	AP170	AP220
Run-out ≤ [mm]		0,020							
Max. radial clamping force [kN]		42							
Max. axial drawtube force [pull / push] [kN]		10							
Max. clamping length [mm]	AG	14							
Reserve stroke in Ø [mm]	D	0,3							
Release stroke in Ø [mm]	C	0,4							
RPM n max. [1/min.]		7000							
Reserve stroke axial [mm]	Q	1,5							
Release stroke axial [mm]	R	2							
Reception workpiece end-stop	FD	Ø 36 f7							
End-stop outer Ø [mm]	AZ	65							
End-stop outer Ø 2 [mm]	EM	42							
Bolt hole circle end-stop	B	LK Ø 53 [3 x M5]							
Length [mm]	H	40							
Length 2 [mm]	BS	95							
Total length [mm]	I	135			139	135			
Depth [mm]	BR	36,50							
Connecting thread inside	S	M30 x 1,5							
Connecting thread outside	T	M44 x 1,5							
Distance [mm]	JA	30			34	30			
Depth of thread [mm]	M	25,5							
Thread length [mm]	N	19							
Max. drawtube Ø [mm]	DG	54							
Minimum length of DG [mm]		13							
Bore-Ø	FH	61	79,6	103,2	100	77	80	103	
Bolt hole circle	V	LK Ø 82,6 [3 x M10]	LK Ø 104,8 [6 x M10]	LK Ø 133,4 [6 x M12]	LK Ø 171,4 [6 x M16]	LK Ø 104,8 [6 x M10]		LK Ø 133,4 [6 x M12]	LK Ø 171,4 [6 x M16]
Outer Ø [mm]	AW	140		165	210	140	150	180	230
Outer Ø 2 [mm]	HD	139							
Air sensing control bolt hole circle-Ø [mm]	HQ	56							
Air sensing control bore Ø [mm]	KN	3							
Central air sensing connection Ø optional [mm]		12 H7							
Weight [kg]		8,7	8,1	9,1	13,9	8,3	8,9	10,7	16,2


Segmented clamping bushings
Page 442


Flanges
Page 208


Actuating units
Page 226


Accessory overview
Page 478

Scope of delivery

- Mandrel without spindle flange / without air sensing adapter
- Coupling ring
- Trimming sleeve for SAD segmented clamping bushings
- Mounting aid depending on size

MANDO T212 size S. Technical data

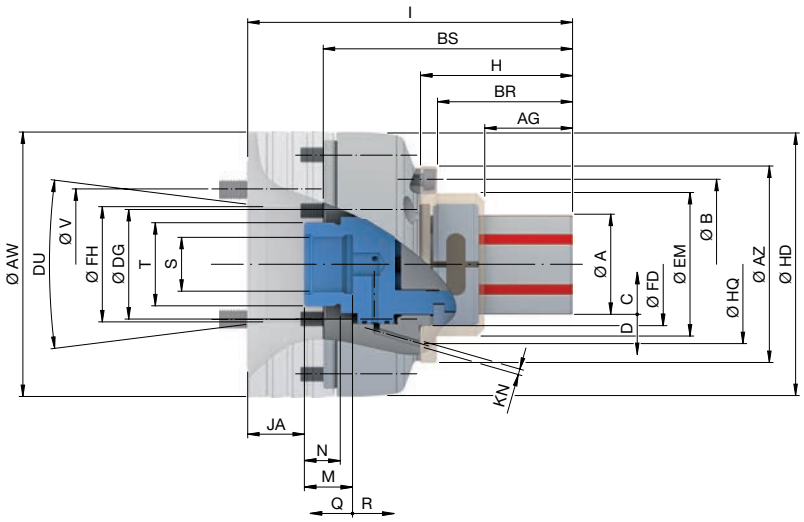

Size		S							
Clamping range [mm]	A	16 – 21							
Spindle nose	DU	A2-4	A2-5	A2-6	A2-8	AP120	AP140	AP170	AP220
Run-out ≤ [mm]		0,020							
Max. radial clamping force [kN]		42							
Max. axial drawtube force [pull / push] [kN]		10							
Max. clamping length [mm]	AG	15							
Reserve stroke in Ø [mm]	D	0,3							
Release stroke in Ø [mm]	C	0,4							
RPM n max. [1/min.]		7000							
Reserve stroke axial [mm]	Q	1,5							
Release stroke axial [mm]	R	2							
Reception workpiece end-stop	FD	Ø 39 f7							
End-stop outer Ø [mm]	AZ	70							
End-stop outer Ø 2 [mm]	EM	45							
Bolt hole circle end-stop	B	LK Ø 57 [3 x M5]							
Length [mm]	H	47,5							
Length 2 [mm]	BS	97							
Total length [mm]	I	137			141	137			
Depth [mm]	BR	38,00							
Connecting thread inside	S	M30 x 1,5							
Connecting thread outside	T	M44 x 1,5							
Distance [mm]	JA	30			34	30			
Depth of thread [mm]	M	25,5							
Thread length [mm]	N	19							
Max. drawtube Ø [mm]	DG	54							
Minimum length of DG [mm]		13							
Bore-Ø	FH	61	79,6	103,2	100	77	80	103	
Bolt hole circle	V	LK Ø 82,6 [3 x M10]	LK Ø 104,8 [6 x M10]	LK Ø 133,4 [6 x M12]	LK Ø 171,4 [6 x M16]	LK Ø 104,8 [6 x M10]		LK Ø 133,4 [6 x M12]	LK Ø 171,4 [6 x M16]
Outer Ø [mm]	AW	140		165	210	140	150	180	230
Outer Ø 2 [mm]	HD	139							
Air sensing control bolt hole circle-Ø [mm]	HQ	60							
Air sensing control bore Ø [mm]	KN	3							
Central air sensing connection Ø optional [mm]		12 H7							
Weight [kg]		8,8	8,2	9,2	14	8,4	9	10,8	16,3


Segmented clamping bushings
Page 442


Flanges
Page 208


Actuating units
Page 226


Accessory overview
Page 478

Scope of delivery

- Mandrel without spindle flange / without air sensing adapter
- Coupling ring
- Trimming sleeve for SAD segmented clamping bushings
- Mounting aid depending on size

MANDO T212 size 0. Technical data

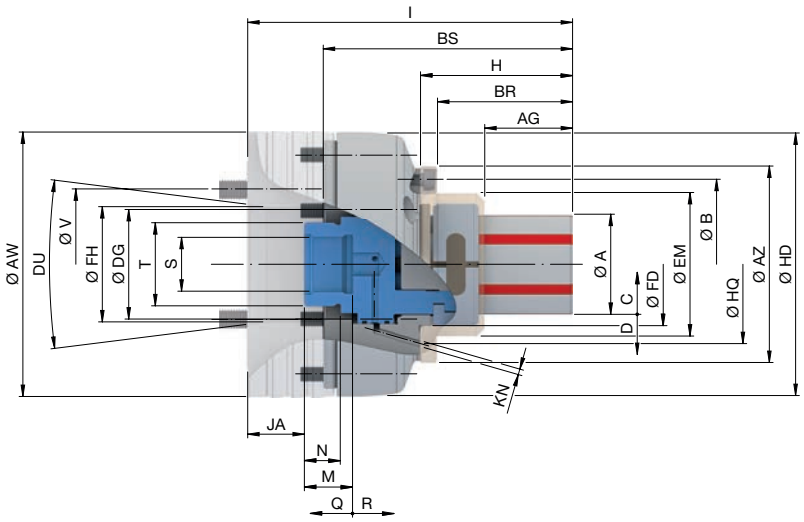

Size		0							
Clamping range [mm]	A	20 – 28							
Spindle nose	DU	A2-4	A2-5	A2-6	A2-8	AP120	AP140	AP170	AP220
Run-out ≤ [mm]		0,010							
Max. radial clamping force [kN]		42							
Max. axial drawtube force [pull / push] [kN]		10							
Max. clamping length [mm]	AG	21							
Reserve stroke in Ø [mm]	D	0,3							
Release stroke in Ø [mm]	C	0,4							
RPM n max. [1/min.]		7000							
Reserve stroke axial [mm]	Q	1,5							
Release stroke axial [mm]	R	2							
Reception workpiece end-stop	FD	Ø 47 f7							
End-stop outer Ø [mm]	AZ	90							
End-stop outer Ø 2 [mm]	EM	54							
Bolt hole circle end-stop	B	LK Ø 70 [3 x M6]							
Length [mm]	H	58,5							
Length 2 [mm]	BS	108							
Total length [mm]	I	148			152	148			
Depth [mm]	BR	44							
Connecting thread inside	S	M30 x 1,5							
Connecting thread outside	T	M44 x 1,5							
Distance [mm]	JA	30			34	30			
Depth of thread [mm]	M	25,5							
Thread length [mm]	N	19							
Max. drawtube Ø [mm]	DG	54							
Minimum length of DG [mm]		13							
Bore-Ø	FH	61	79,6	103,2	100	77	80	103	
Bolt hole circle	V	LK Ø 82,6 [3 x M10]	LK Ø 104,8 [6 x M10]	LK Ø 133,4 [6 x M12]	LK Ø 171,4 [6 x M16]	LK Ø 104,8 [6 x M10]		LK Ø 133,4 [6 x M12]	LK Ø 171,4 [6 x M16]
Outer Ø [mm]	AW	140		165	210	140	150	180	230
Outer Ø 2 [mm]	HD	139							
Air sensing control bolt hole circle-Ø [mm]	HQ	70							
Air sensing control bore Ø [mm]	KN	3							
Central air sensing connection Ø optional [mm]		12 H7							
Weight [kg]		9,5	8,9	9,9	14,7	9,1	9,7	11,5	17


Segmented clamping bushings
Page 442


Flanges
Page 208


Actuating units
Page 226


Accessory overview
Page 478

Scope of delivery

- Mandrel without spindle flange / without air sensing adapter
- Coupling ring
- Trimming sleeve for SAD segmented clamping bushings
- Mounting aid depending on size

MANDO T212 size 1. Technical data

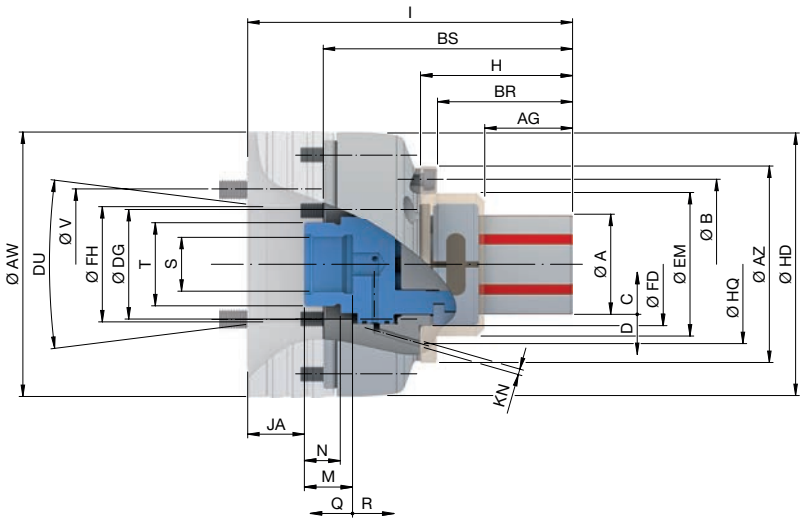

Size		1							
Clamping range [mm]	A	26 – 38							
Spindle nose	DU	A2-4	A2-5	A2-6	A2-8	AP120	AP140	AP170	AP220
Run-out ≤ [mm]		0,010							
Max. radial clamping force [kN]		42							
Max. axial drawtube force [pull / push] [kN]		10							
Max. clamping length [mm]	AG	25							
Reserve stroke in Ø [mm]	D	0,3							
Release stroke in Ø [mm]	C	0,4							
RPM n max. [1/min.]		7000							
Reserve stroke axial [mm]	Q	1,5							
Release stroke axial [mm]	R	2							
Reception workpiece end-stop	FD	Ø 55 f7							
End-stop outer Ø [mm]	AZ	90							
End-stop outer Ø 2 [mm]	EM	62							
Bolt hole circle end-stop	B	LK Ø 75 [3 x M6]							
Length [mm]	H	64,5							
Length 2 [mm]	BS	114							
Total length [mm]	I	154			159	154			
Depth [mm]	BR	47							
Connecting thread inside	S	M30 x 1,5							
Connecting thread outside	T	M44 x 1,5							
Distance [mm]	JA	30			34	30			
Depth of thread [mm]	M	25,5							
Thread length [mm]	N	19							
Max. drawtube Ø [mm]	DG	54							
Minimum length of DG [mm]		13							
Bore-Ø	FH	61	79,6	103,2	100	77	80	103	
Bolt hole circle	V	LK Ø 82,6 [3 x M10]	LK Ø 104,8 [6 x M10]	LK Ø 133,4 [6 x M12]	LK Ø 171,4 [6 x M16]	LK Ø 104,8 [6 x M10]		LK Ø 133,4 [6 x M12]	LK Ø 171,4 [6 x M16]
Outer Ø [mm]	AW	140		165	210	140	150	180	230
Outer Ø 2 [mm]	HD	139							
Air sensing control bolt hole circle-Ø [mm]	HQ	70							
Air sensing control bore Ø [mm]	KN	3							
Central air sensing connection Ø optional [mm]		12 H7							
Weight [kg]		9,5	8,9	9,9	14,7	9,1	9,7	11,5	17


Segmented clamping bushings
Page 442


Flanges
Page 208


Actuating units
Page 226


Accessory overview
Page 478

Scope of delivery

- Mandrel without spindle flange / without air sensing adapter
- Coupling ring
- Trimming sleeve for SAD segmented clamping bushings
- Mounting aid depending on size

MANDO T212 size 2. Technical data

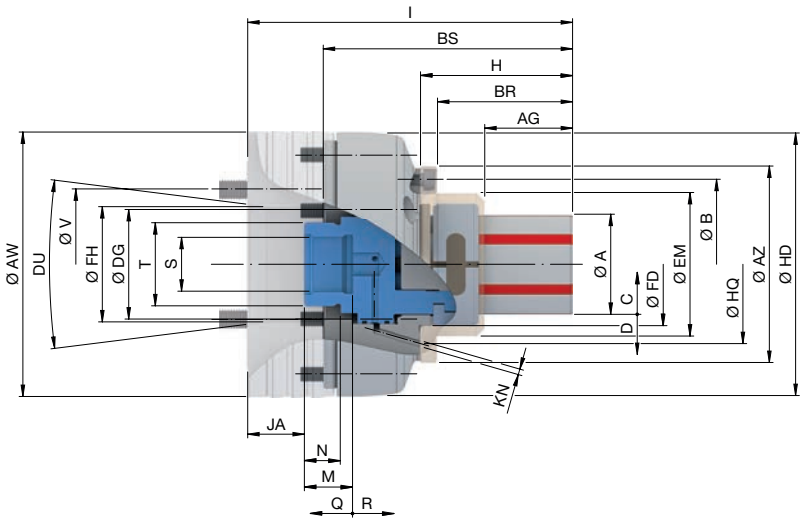

Size		2							
Clamping range [mm]	A	36 – 54							
Spindle nose	DU	A2-4	A2-5	A2-6	A2-8	AP120	AP140	AP170	AP220
Run-out ≤ [mm]		0,010							
Max. radial clamping force [kN]		85							
Max. axial drawtube force [pull / push] [kN]		20							
Max. clamping length [mm]	AG	40							
Reserve stroke in Ø [mm]	D	0,3							
Release stroke in Ø [mm]	C	0,5							
RPM n max. [1/min.]		7000							
Reserve stroke axial [mm]	Q	1,5							
Release stroke axial [mm]	R	2							
Reception workpiece end-stop	FD	Ø 65 f7							
End-stop outer Ø [mm]	AZ	104							
End-stop outer Ø 2 [mm]	EM	76							
Bolt hole circle end-stop	B	LK Ø 90 [3 x M6]							
Length [mm]	H	80,5							
Length 2 [mm]	BS	132							
Total length [mm]	I	172			176	172			
Depth [mm]	BR	71,5							
Connecting thread inside	S	M30 x 1,5							
Connecting thread outside	T	M44 x 1,5							
Distance [mm]	JA	30			34	30			
Depth of thread [mm]	M	25,5							
Thread length [mm]	N	19							
Max. drawtube Ø [mm]	DG	54							
Minimum length of DG [mm]		13							
Bore-Ø	FH	61	79,6	103,2	100	77	80	103	
Bolt hole circle	V	LK Ø 82,6 [3 x M10]	LK Ø 104,8 [6 x M10]	LK Ø 133,4 [6 x M12]	LK Ø 171,4 [6 x M16]	LK Ø 104,8 [6 x M10]		LK Ø 133,4 [6 x M12]	LK Ø 171,4 [6 x M16]
Outer Ø [mm]	AW	140		165	210	140	150	180	230
Outer Ø 2 [mm]	HD	139							
Air sensing control bolt hole circle-Ø [mm]	HQ	84							
Air sensing control bore Ø [mm]	KN	3							
Central air sensing connection Ø optional [mm]		12 H7							
Weight [kg]		10,4	9,8	10,8	15,6	10	10,6	12,4	17,9


Segmented clamping bushings
Page 442


Flanges
Page 208


Actuating units
Page 226


Accessory overview
Page 478

Scope of delivery

- Mandrel without spindle flange / without air sensing adapter
- Coupling ring
- Trimming sleeve for SAD segmented clamping bushings
- Mounting aid depending on size

MANDO T212 size 3. Technical data

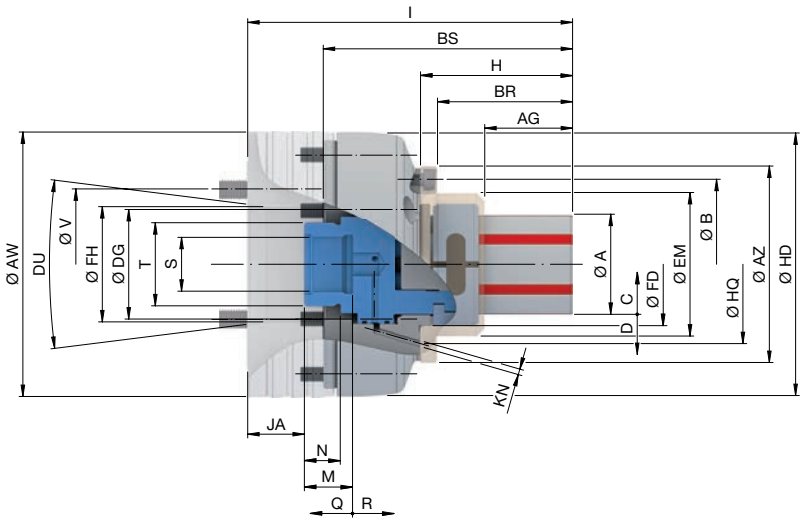

Size		3							
Clamping range [mm]	A	50 – 80							
Spindle nose	DU	A2-4	A2-5	A2-6	A2-8	AP120	AP140	AP170	AP220
Run-out ≤ [mm]		0,010							
Max. radial clamping force [kN]		105							
Max. axial drawtube force [pull / push] [kN]		25							
Max. clamping length [mm]	AG	44,5							
Reserve stroke in Ø [mm]	D	0,4							
Release stroke in Ø [mm]	C	0,5							
RPM n max. [1/min.]		6000							
Reserve stroke axial [mm]	Q	2							
Release stroke axial [mm]	R	2,5							
Reception workpiece end-stop	FD	Ø 83 f7							
End-stop outer Ø [mm]	AZ	120							
End-stop outer Ø 2 [mm]	EM	105							
Bolt hole circle end-stop	B	LK Ø 104 [3 x M6]							
Length [mm]	H	87,5							
Length 2 [mm]	BS	140							
Total length [mm]	I	180			184	180			
Depth [mm]	BR	66,50							
Connecting thread inside	S	M30 x 1,5							
Connecting thread outside	T	M44 x 1,5							
Distance [mm]	JA	30			34	30			
Depth of thread [mm]	M	25,5							
Thread length [mm]	N	19							
Max. drawtube Ø [mm]	DG	54							
Minimum length of DG [mm]		13							
Bore-Ø	FH	61	79,6	103,2	100	77	80	103	
Bolt hole circle	V	LK Ø 82,6 [3 x M10]	LK Ø 104,8 [6 x M10]	LK Ø 133,4 [6 x M12]	LK Ø 171,4 [6 x M16]	LK Ø 104,8 [6 x M10]		LK Ø 133,4 [6 x M12]	LK Ø 171,4 [6 x M16]
Outer Ø [mm]	AW	140		165	210	140	150	180	230
Outer Ø 2 [mm]	HD	139							
Air sensing control bolt hole circle-Ø [mm]	HQ	100							
Air sensing control bore Ø [mm]	KN	3							
Central air sensing connection Ø optional [mm]		12 H7							
Weight [kg]		11,3	10,7	11,7	16,5	10,9	11,5	13,3	18,8


Segmented clamping bushings
Page 442


Flanges
Page 208


Actuating units
Page 226


Accessory overview
Page 478

Scope of delivery

- Mandrel without spindle flange / without air sensing adapter
- Coupling ring
- Trimming sleeve for SAD segmented clamping bushings
- Mounting aid depending on size

MANDO T212 size 4. Technical data

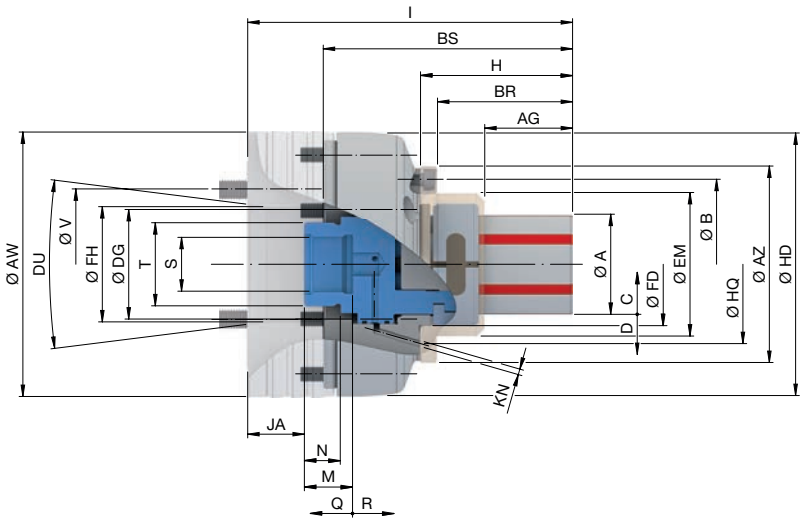

Size		4							
Clamping range [mm]	A	69 – 100							
Spindle nose	DU	A2-4	A2-5	A2-6	A2-8	AP120	AP140	AP170	AP220
Run-out ≤ [mm]		0,010							
Max. radial clamping force [kN]		150							
Max. axial drawtube force [pull / push] [kN]		35							
Max. clamping length [mm]	AG	52,5							
Reserve stroke in Ø [mm]	D	0,5							
Release stroke in Ø [mm]	C	0,6							
RPM n max. [1/min.]		6000							
Reserve stroke axial [mm]	Q	2,5							
Release stroke axial [mm]	R	3							
Reception workpiece end-stop	FD	Ø 103 f7							
End-stop outer Ø [mm]	AZ	138							
End-stop outer Ø 2 [mm]	EM	124							
Bolt hole circle end-stop	B	LK Ø 124 [3 x M6]							
Length [mm]	H	97,5							
Length 2 [mm]	BS	148,5							
Total length [mm]	I	188,5			192,5	188,5			
Depth [mm]	BR	77,50							
Connecting thread inside	S	M30 x 1,5							
Connecting thread outside	T	M44 x 1,5							
Distance [mm]	JA	30			34	30			
Depth of thread [mm]	M	25,5							
Thread length [mm]	N	19							
Max. drawtube Ø [mm]	DG	54							
Minimum length of DG [mm]		13							
Bore-Ø	FH	61	79,6	103,2	100	77	80	103	
Bolt hole circle	V	LK Ø 82,6 [3 x M10]	LK Ø 104,8 [6 x M10]	LK Ø 133,4 [6 x M12]	LK Ø 171,4 [6 x M16]	LK Ø 104,8 [6 x M10]		LK Ø 133,4 [6 x M12]	LK Ø 171,4 [6 x M16]
Outer Ø [mm]	AW	140		165	210	140	150	180	230
Outer Ø 2 [mm]	HD	139							
Air sensing control bolt hole circle-Ø [mm]	HQ	116							
Air sensing control bore Ø [mm]	KN	3							
Central air sensing connection Ø optional [mm]		12 H7							
Weight [kg]		12,5	11,9	12,9	17,7	12,1	12,7	14,5	20


Segmented clamping bushings
Page 442


Flanges
Page 208


Actuating units
Page 226


Accessory overview
Page 478

Scope of delivery

- Mandrel without spindle flange / without air sensing adapter
- Coupling ring
- Trimming sleeve for SAD segmented clamping bushings
- Mounting aid depending on size

MANDO T212 size 5. Technical data

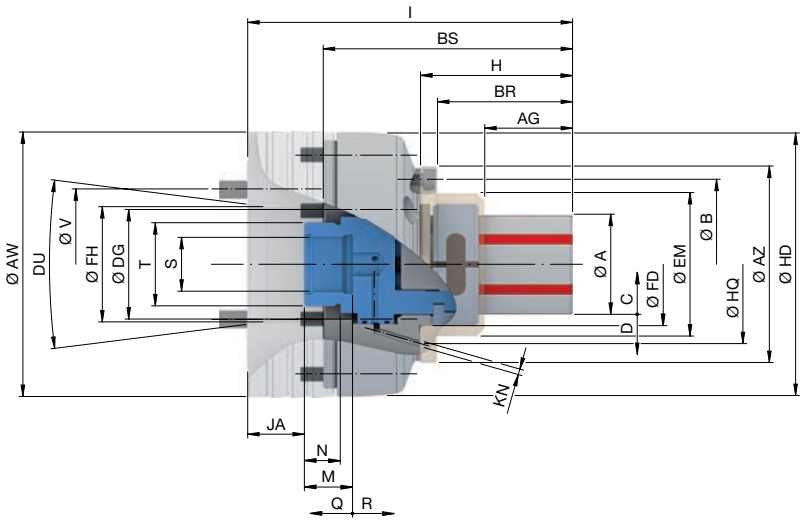

Size		5		
Clamping range [mm]	A	**100 – 130**		
Spindle nose	DU	A2-6	A2-8	A2-11
Run-out ≤ [mm]		0,010		
Max. radial clamping force [kN]		170		
Max. axial drawtube force [pull / push] [kN]		40		
Max. clamping length [mm]	AG	53		
Reserve stroke in Ø [mm]	D	0,6		
Release stroke in Ø [mm]	C	0,6		
RPM n max. [1/min.]		5000		
Reserve stroke axial [mm]	Q	3		
Release stroke axial [mm]	R	3		
Reception workpiece end-stop	FD	Ø 140 f7		
End-stop outer Ø [mm]	AZ	195		
End-stop outer Ø 2 [mm]	EM	160		
Bolt hole circle end-stop	B	LK Ø 176 [3 x M8]		
Length [mm]	H	112		
Length 2 [mm]	BS	175		
Total length [mm]	I	238,5	242,5	248,5
Depth [mm]	BR	92		
Connecting thread inside	S	M30 x 1,5		
Connecting thread outside	T	M44 x 1,5		
Distance [mm]	JA	53,5	57,5	63,5
Depth of thread [mm]	M	25,5		
Thread length [mm]	N	19		
Max. drawtube Ø [mm]	DG	118		
Minimum length of DG [mm]		13		
Bore-Ø	FH	103	136	155
Bolt hole circle	V	LK Ø 133,4 [6 x M12]	LK Ø 171,4 [6 x M16]	LK Ø 235 [6 x M20]
Outer Ø [mm]	AW	235		280
Outer Ø 2 [mm]	HD	230		
Air sensing control bolt hole circle-Ø [mm]	HQ	170		
Air sensing control bore Ø [mm]	KN	3		
Central air sensing connection Ø optional [mm]		12 H7		
Weight [kg]		40	39	49


Segmented clamping bushings
Page 442


Flanges
Page 208


Actuating units
Page 226


Accessory overview
Page 478

Scope of delivery

- Mandrel without spindle flange / without air sensing adapter
- Coupling ring
- Trimming sleeve for SAD segmented clamping bushings
- Mounting aid depending on size

MANDO T212 size 6. Technical data

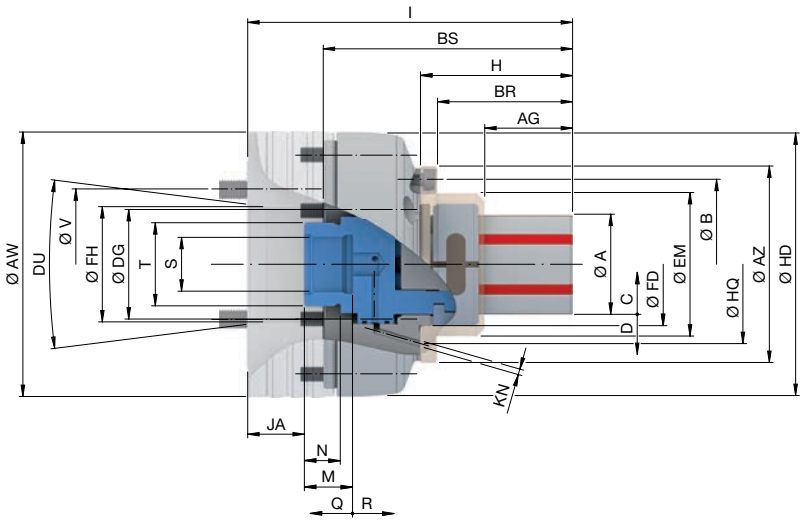

Size		6		
Clamping range [mm]	A	**130 – 160**		
Spindle nose	DU	A2-6	A2-8	A2-11
Run-out ≤ [mm]		0,010		
Max. radial clamping force [kN]		170		
Max. axial drawtube force [pull / push] [kN]		40		
Max. clamping length [mm]	AG	61		
Reserve stroke in Ø [mm]	D	0,6		
Release stroke in Ø [mm]	C	0,6		
RPM n max. [1/min.]		4000		
Reserve stroke axial [mm]	Q	3		
Release stroke axial [mm]	R	3		
Reception workpiece end-stop	FD	Ø 164 f7		
End-stop outer Ø [mm]	AZ	226		
End-stop outer Ø 2 [mm]	EM	190		
Bolt hole circle end-stop	B	LK Ø 200 [3 x M8]		
Length [mm]	H	121,5		
Length 2 [mm]	BS	188,5		
Total length [mm]	I	252	256	262
Depth [mm]	BR	87		
Connecting thread inside	S	M30 x 1,5		
Connecting thread outside	T	M44 x 1,5		
Distance [mm]	JA	53,5	57,5	63,5
Depth of thread [mm]	M	25,5		
Thread length [mm]	N	19		
Max. drawtube Ø [mm]	DG	142		
Minimum length of DG [mm]		13		
Bore-Ø	FH	103	136	155
Bolt hole circle	V	LK Ø 133,4 [6 x M12]	LK Ø 171,4 [6 x M16]	LK Ø 235 [6 x M20]
Outer Ø [mm]	AW	235		280
Outer Ø 2 [mm]	HD	231		
Air sensing control bolt hole circle-Ø [mm]	HQ	192		
Air sensing control bore Ø [mm]	KN	3		
Central air sensing connection Ø optional [mm]		12 H7		
Weight [kg]		45		55


Segmented clamping bushings
Page 442


Flanges
Page 208


Actuating units
Page 226


Accessory overview
Page 478

Scope of delivery

- Mandrel without spindle flange / without air sensing adapter
- Coupling ring
- Trimming sleeve for SAD segmented clamping bushings
- Mounting aid depending on size

MANDO T212 size 7. Technical data

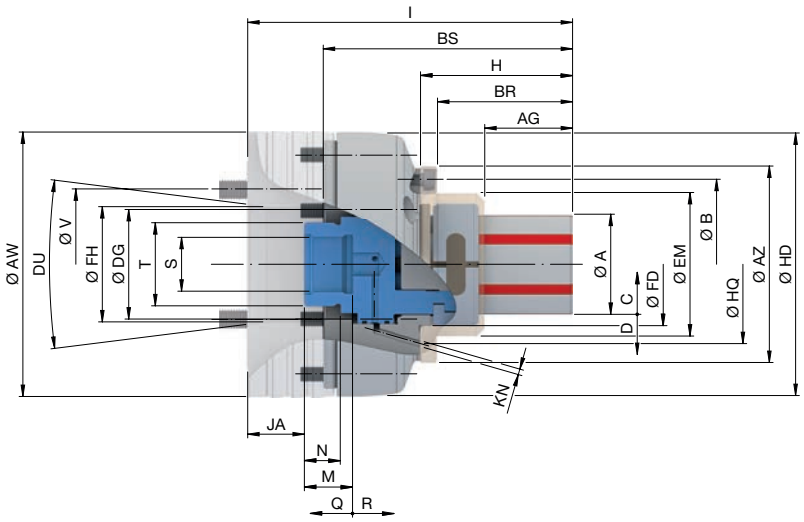

Size		7		
Clamping range [mm]	A	**160 – 190**		
Spindle nose	DU	A2-6	A2-8	A2-11
Run-out ≤ [mm]		0,010		
Max. radial clamping force [kN]		190		
Max. axial drawtube force [pull / push] [kN]		45		
Max. clamping length [mm]	AG	55		
Reserve stroke in Ø [mm]	D	0,6		
Release stroke in Ø [mm]	C	0,8		
RPM n max. [1/min.]		3200		
Reserve stroke axial [mm]	Q	3		
Release stroke axial [mm]	R	4		
Reception workpiece end-stop	FD	Ø 192 f7		
End-stop outer Ø [mm]	AZ	234		
End-stop outer Ø 2 [mm]	EM	212		
Bolt hole circle end-stop	B	LK Ø 216 [3 x M8]		
Length [mm]	H	115		
Length 2 [mm]	BS	188,5		
Total length [mm]	I	247,5	251,5	257,5
Depth [mm]	BR	101		
Connecting thread inside	S	M30 x 1,5		
Connecting thread outside	T	M44 x 1,5		
Distance [mm]	JA	53,5	57,5	63,5
Depth of thread [mm]	M	25,5		
Thread length [mm]	N	19		
Max. drawtube Ø [mm]	DG	142		
Minimum length of DG [mm]		0		
Bore-Ø	FH	103	136	155
Bolt hole circle	V	LK Ø 133,4 [6 x M12]	LK Ø 171,4 [6 x M16]	LK Ø 235 [6 x M20]
Outer Ø [mm]	AW	235		280
Outer Ø 2 [mm]	HD	237		
Air sensing control bolt hole circle-Ø [mm]	HQ	216		
Air sensing control bore Ø [mm]	KN	3		
Central air sensing connection Ø optional [mm]		12 H7		
Weight [kg]		49		58


Segmented clamping bushings
Page 442


Flanges
Page 208


Actuating units
Page 226


Accessory overview
Page 478

Scope of delivery

- Mandrel without spindle flange / without air sensing adapter
- Coupling ring
- Trimming sleeve for SAD segmented clamping bushings
- Mounting aid depending on size

Mandrel MANDO

MANDO T812 size XXS. Technical data

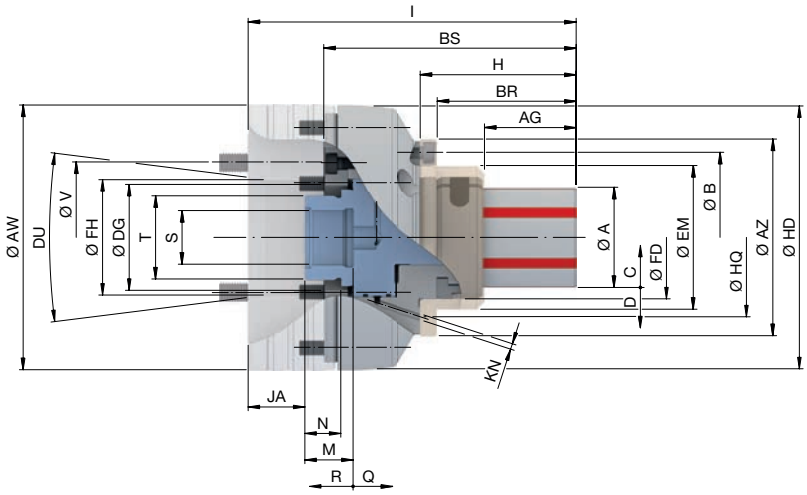

Size		XXS							
Clamping range [mm]	A	8 – 13							
Spindle nose	DU	A2-4	A2-5	A2-6	A2-8	AP120	AP140	AP170	AP220
Run-out ≤ [mm]		0,025							
Max. radial clamping force [kN]		42							
Max. axial compression force [kN]		10							
Max. clamping length [mm]	AG	12,9							
Reserve stroke in Ø [mm]	D	0,2							
Release stroke in Ø [mm]	C	0,2							
RPM n max. [1/min.]		7000							
Reserve stroke axial [mm]	Q	1,5							
Release stroke axial [mm]	R	1,5							
Reception workpiece end-stop	FD	Ø 34 f7							
End-stop outer Ø [mm]	AZ	65							
End-stop outer Ø 2 [mm]	EM	41							
Bolt hole circle end-stop	B	LK Ø 53 [3 x M5]							
Length [mm]	H	44							
Length 2 [mm]	BS	96							
Total length [mm]	I	136			140	136			
Depth [mm]	BR	35							
Connecting thread inside	S	M30 x 1,5							
Connecting thread outside	T	M44 x 1,5							
Distance [mm]	JA	30			34	30			
Depth of thread [mm]	M	25,5							
Thread length [mm]	N	19							
Max. drawtube Ø [mm]	DG	54							
Minimum length of DG [mm]		13							
Bore-Ø	FH	61	79,6	103,2	100	77	80	103	
Bolt hole circle	V	LK Ø 82,6 [3 x M10]	LK Ø 104,8 [6 x M10]	LK Ø 133,4 [6 x M12]	LK Ø 171,4 [6 x M16]	LK Ø 104,8 [6 x M10]		LK Ø 133,4 [6 x M12]	LK Ø 171,4 [6 x M16]
Outer Ø [mm]	AW	140		165	210	140	150	180	230
Outer Ø 2 [mm]	HD	139							
Air sensing control bolt hole circle-Ø [mm]	HQ	56							
Air sensing control bore Ø [mm]	KN	3							
Central air sensing connection Ø optional [mm]		12 H7							
Weight [kg]		9,1	8,5	9,5	14,4	8,7	9,3	11,1	16,6


Segmented clamping bushings
Page 442


Flanges
Page 208


Actuating units
Page 226


Accessory overview
Page 478

Scope of delivery

- Mandrel without spindle flange / without air sensing adapter
- Coupling ring
- Trimming sleeve for SAD segmented clamping bushings
- Mounting aid depending on size

MANDO T812 size XS. Technical data

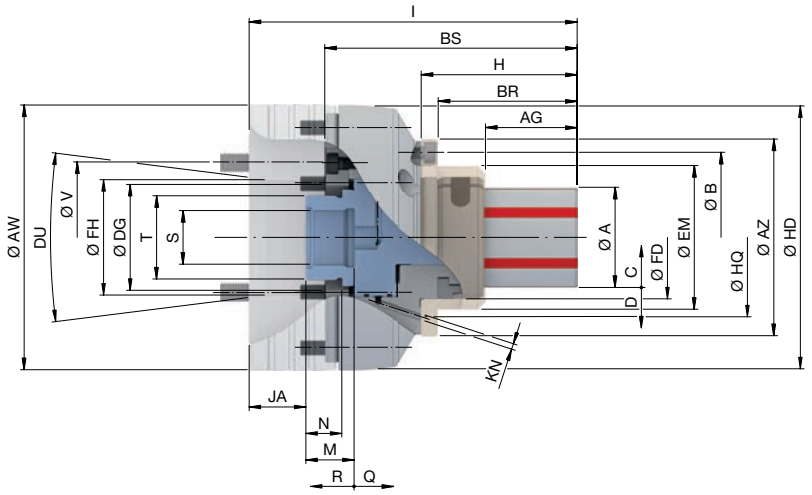

Size		XS							
Clamping range [mm]	A	13 – 19							
Spindle nose	DU	A2-4	A2-5	A2-6	A2-8	AP120	AP140	AP170	AP220
Run-out ≤ [mm]		0,025							
Max. radial clamping force [kN]		42							
Max. axial compression force [kN]		10							
Max. clamping length [mm]	AG	14							
Reserve stroke in Ø [mm]	D	0,3							
Release stroke in Ø [mm]	C	0,4							
RPM n max. [1/min.]		7000							
Reserve stroke axial [mm]	Q	1,5							
Release stroke axial [mm]	R	2							
Reception workpiece end-stop	FD	Ø 36 f7							
End-stop outer Ø [mm]	AZ	65							
End-stop outer Ø 2 [mm]	EM	42							
Bolt hole circle end-stop	B	LK Ø 53 [3 x M6]							
Length [mm]	H	47,5							
Length 2 [mm]	BS	99							
Total length [mm]	I	137			141	137			
Depth [mm]	BR	39,5							
Connecting thread inside	S	M30 x 1,5							
Connecting thread outside	T	M44 x 1,5							
Distance [mm]	JA	30			34	30			
Depth of thread [mm]	M	25,5							
Thread length [mm]	N	19							
Max. drawtube Ø [mm]	DG	54							
Minimum length of DG [mm]		13							
Bore-Ø	FH	61	79,6	103,2	100	77	80	103	
Bolt hole circle	V	LK Ø 82,6 [3 x M10]	LK Ø 104,8 [6 x M10]	LK Ø 133,4 [6 x M12]	LK Ø 171,4 [6 x M16]	LK Ø 104,8 [6 x M10]		LK Ø 133,4 [6 x M12]	LK Ø 171,4 [6 x M16]
Outer Ø [mm]	AW	140		165	210	140	150	180	230
Outer Ø 2 [mm]	HD	139							
Air sensing control bolt hole circle-Ø [mm]	HQ	56							
Air sensing control bore Ø [mm]	KN	3							
Central air sensing connection Ø optional [mm]		12 H7							
Weight [kg]		9	8,4	9,4	14,3	8,6	9,2	11	16,5


Segmented clamping bushings
Page 442


Flanges
Page 208


Actuating units
Page 226


Accessory overview
Page 478

Scope of delivery

- Mandrel without spindle flange / without air sensing adapter
- Coupling ring
- Trimming sleeve for SAD segmented clamping bushings
- Mounting aid depending on size

Mandrel MANDO

MANDO T812 size S. Technical data

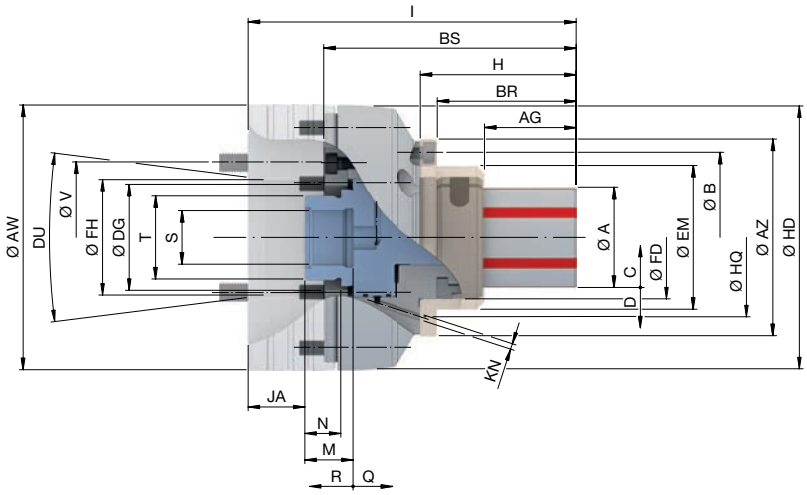

Size		S							
Clamping range [mm]	A	16 – 21							
Spindle nose	DU	A2-4	A2-5	A2-6	A2-8	AP120	AP140	AP170	AP220
Run-out ≤ [mm]		0,025							
Max. radial clamping force [kN]		42							
Max. axial compression force [kN]		10							
Max. clamping length [mm]	AG	15							
Reserve stroke in Ø [mm]	D	0,3							
Release stroke in Ø [mm]	C	0,4							
RPM n max. [1/min.]		7000							
Reserve stroke axial [mm]	Q	1,5							
Release stroke axial [mm]	R	2							
Reception workpiece end-stop	FD	Ø 39 f7							
End-stop outer Ø [mm]	AZ	70							
End-stop outer Ø 2 [mm]	EM	45							
Bolt hole circle end-stop	B	LK Ø 57 [3 x M6]							
Length [mm]	H	49,5							
Length 2 [mm]	BS	102							
Total length [mm]	I	139			143	139			
Depth [mm]	BR	41,5							
Connecting thread inside	S	M30 x 1,5							
Connecting thread outside	T	M44 x 1,5							
Distance [mm]	JA	30			34	30			
Depth of thread [mm]	M	25,5							
Thread length [mm]	N	19							
Max. drawtube Ø [mm]	DG	54							
Minimum length of DG [mm]		13							
Bore-Ø	FH	61	79,6	103,2	100	77	80	103	
Bolt hole circle	V	LK Ø 82,6 [3 x M10]	LK Ø 104,8 [6 x M10]	LK Ø 133,4 [6 x M12]	LK Ø 171,4 [6 x M16]	LK Ø 104,8 [6 x M10]		LK Ø 133,4 [6 x M12]	LK Ø 171,4 [6 x M16]
Outer Ø [mm]	AW	140		165	210	140	150	180	230
Outer Ø 2 [mm]	HD	139							
Air sensing control bolt hole circle-Ø [mm]	HQ	60							
Air sensing control bore Ø [mm]	KN	3							
Central air sensing connection Ø optional [mm]		12 H7							
Weight [kg]		9,2	8,6	9,6	14,5	8,8	9,4	11,2	16,7

			
Segmented clamping bushings Page 442	Flanges Page 208	Actuating units Page 226	Accessory overview Page 478

Scope of delivery

- Mandrel without spindle flange / without air sensing adapter
- Coupling ring
- Trimming sleeve for SAD segmented clamping bushings
- Mounting aid depending on size

MANDO T812 size 0. Technical data

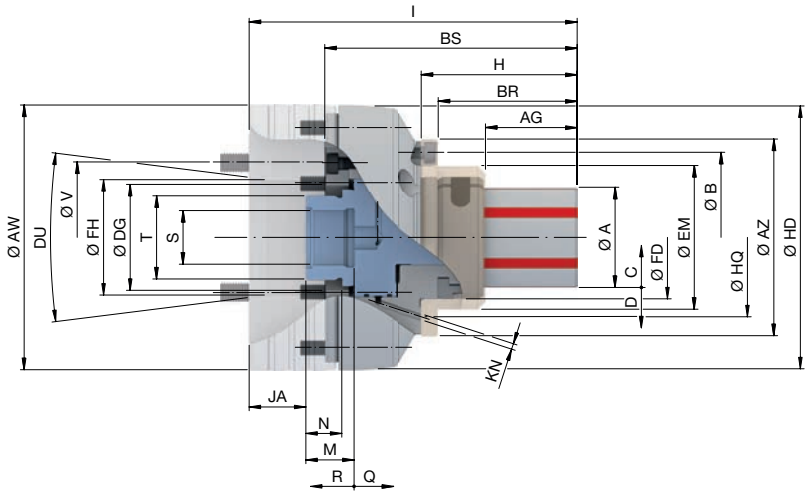

Size		0							
Clamping range [mm]	A	20 – 28							
Spindle nose	DU	A2-4	A2-5	A2-6	A2-8	AP120	AP140	AP170	AP220
Run-out ≤ [mm]		0,015							
Max. radial clamping force [kN]		42							
Max. axial compression force [kN]		10							
Max. clamping length [mm]	AG	21							
Reserve stroke in Ø [mm]	D	0,3							
Release stroke in Ø [mm]	C	0,4							
RPM n max. [1/min.]		7000							
Reserve stroke axial [mm]	Q	1,5							
Release stroke axial [mm]	R	2							
Reception workpiece end-stop	FD	Ø 47 f7							
End-stop outer Ø [mm]	AZ	90							
End-stop outer Ø 2 [mm]	EM	54							
Bolt hole circle end-stop	B	LK Ø 70 [3 x M6]							
Length [mm]	H	60,5							
Length 2 [mm]	BS	114							
Total length [mm]	I	152			156	152			
Depth [mm]	BR	51,5							
Connecting thread inside	S	M30 x 1,5							
Connecting thread outside	T	M44 x 1,5							
Distance [mm]	JA	30			34	30			
Depth of thread [mm]	M	25,5							
Thread length [mm]	N	19							
Max. drawtube Ø [mm]	DG	54							
Minimum length of DG [mm]		13							
Bore-Ø	FH	61	79,6	103,2	100	77	80	103	
Bolt hole circle	V	LK Ø 82,6 [3 x M10]	LK Ø 104,8 [6 x M10]	LK Ø 133,4 [6 x M12]	LK Ø 171,4 [6 x M16]	LK Ø 104,8 [6 x M10]		LK Ø 133,4 [6 x M12]	LK Ø 171,4 [6 x M16]
Outer Ø [mm]	AW	140		165	210	140	150	180	230
Outer Ø 2 [mm]	HD	139							
Air sensing control bolt hole circle-Ø [mm]	HQ	70							
Air sensing control bore Ø [mm]	KN	3							
Central air sensing connection Ø optional [mm]		12 H7							
Weight [kg]		9,9	9,3	10,3	15,2	9,5	10,1	11,9	17,4


Segmented clamping bushings
Page 442


Flanges
Page 208


Actuating units
Page 226


Accessory overview
Page 478

Scope of delivery

- Mandrel without spindle flange / without air sensing adapter
- Coupling ring
- Trimming sleeve for SAD segmented clamping bushings
- Mounting aid depending on size

MANDO T812 size 1. Technical data

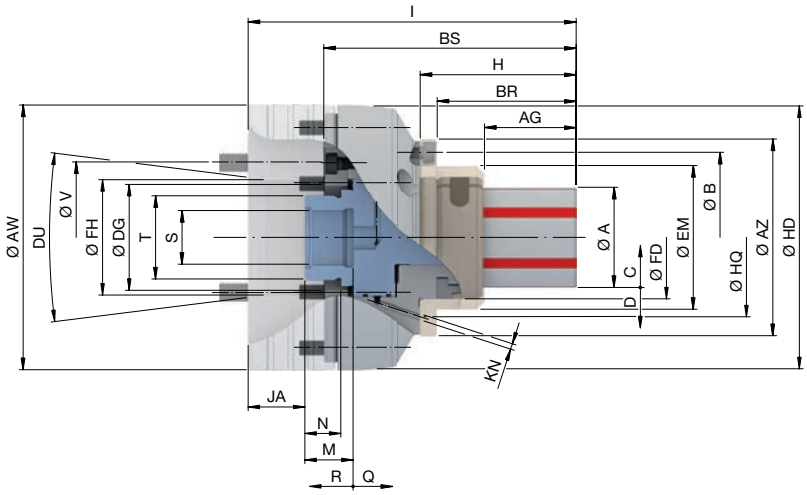

Size		1							
Clamping range [mm]	A	26 – 38							
Spindle nose	DU	A2-4	A2-5	A2-6	A2-8	AP120	AP140	AP170	AP220
Run-out ≤ [mm]		0,015							
Max. radial clamping force [kN]		42							
Max. axial compression force [kN]		10							
Max. clamping length [mm]	AG	25							
Reserve stroke in Ø [mm]	D	0,3							
Release stroke in Ø [mm]	C	0,4							
RPM n max. [1/min.]		7000							
Reserve stroke axial [mm]	Q	1,5							
Release stroke axial [mm]	R	2							
Reception workpiece end-stop	FD	Ø 55 f7							
End-stop outer Ø [mm]	AZ	90							
End-stop outer Ø 2 [mm]	EM	62							
Bolt hole circle end-stop	B	LK Ø 75 [3 x M6]							
Length [mm]	H	66,5							
Length 2 [mm]	BS	117,5							
Total length [mm]	I	156			160	156			
Depth [mm]	BR	57,5							
Connecting thread inside	S	M30 x 1,5							
Connecting thread outside	T	M44 x 1,5							
Distance [mm]	JA	30			34	30			
Depth of thread [mm]	M	25,5							
Thread length [mm]	N	19							
Max. drawtube Ø [mm]	DG	54							
Minimum length of DG [mm]		13							
Bore-Ø	FH	61	79,6	133,4	100	77	80	103	
Bolt hole circle	V	LK Ø 82,6 [3 x M10]	LK Ø 104,8 [6 x M10]	LK Ø 103,2 [6 x M12]	LK Ø 171,4 [6 x M16]	LK Ø 104,8 [6 x M10]		LK Ø 133,4 [6 x M12]	LK Ø 171,4 [6 x M16]
Outer Ø [mm]	AW	140		165	210	140	150	180	230
Outer Ø 2 [mm]	HD	139							
Air sensing control bolt hole circle-Ø [mm]	HQ	70							
Air sensing control bore Ø [mm]	KN	3							
Central air sensing connection Ø optional [mm]		12 H7							
Weight [kg]		10	9,3	10,3	15,2	9,5	10	12	17,4


Segmented clamping bushings
Page 442


Flanges
Page 208


Actuating units
Page 226


Accessory overview
Page 478

Scope of delivery

- Mandrel without spindle flange / without air sensing adapter
- Coupling ring
- Trimming sleeve for SAD segmented clamping bushings
- Mounting aid depending on size

MANDO T812 size 2. Technical data

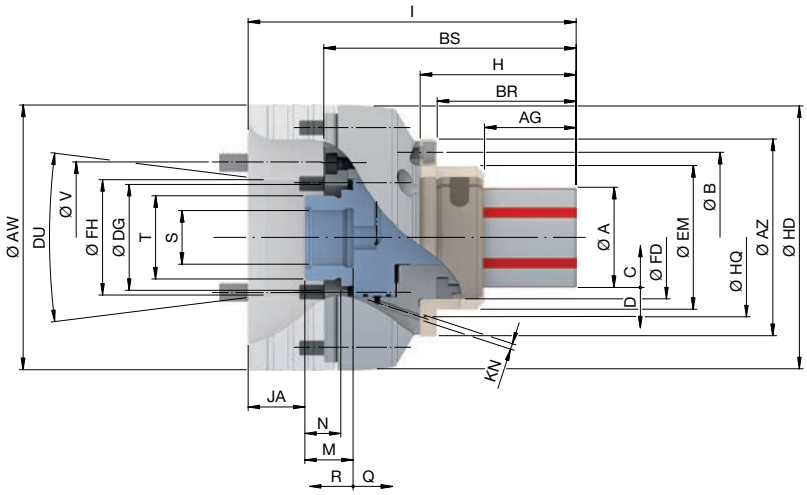

Size		2							
Clamping range [mm]	A	36 – 54							
Spindle nose	DU	A2-4	A2-5	A2-6	A2-8	AP120	AP140	AP170	AP220
Run-out ≤ [mm]		0,015							
Max. radial clamping force [kN]		85							
Max. axial compression force [kN]		20							
Max. clamping length [mm]	AG	40							
Reserve stroke in Ø [mm]	D	0,3							
Release stroke in Ø [mm]	C	0,5							
RPM n max. [1/min.]		7000							
Reserve stroke axial [mm]	Q	1,5							
Release stroke axial [mm]	R	2,5							
Reception workpiece end-stop	FD	Ø 65 f7							
End-stop outer Ø [mm]	AZ	104							
End-stop outer Ø 2 [mm]	EM	76							
Bolt hole circle end-stop	B	LK Ø 90 [3 x M6]							
Length [mm]	H	82,5							
Length 2 [mm]	BS	133,5							
Total length [mm]	I	173,5			176	172			
Depth [mm]	BR	73,5							
Connecting thread inside	S	M30 x 1,5							
Connecting thread outside	T	M44 x 1,5							
Distance [mm]	JA	30			34	30			
Depth of thread [mm]	M	25,5							
Thread length [mm]	N	19							
Max. drawtube Ø [mm]	DG	54							
Minimum length of DG [mm]		13							
Bore-Ø	FH	61	79,6	103,2	100	77	80	103	
Bolt hole circle	V	LK Ø 82,6 [3 x M10]	LK Ø 104,8 [6 x M10]	LK Ø 133,4 [6 x M12]	LK Ø 171,4 [6 x M16]	LK Ø 104,8 [6 x M10]		LK Ø 133,4 [6 x M12]	LK Ø 171,4 [6 x M16]
Outer Ø [mm]	AW	140		165	210	140	150	180	230
Outer Ø 2 [mm]	HD	139							
Air sensing control bolt hole circle-Ø [mm]	HQ	84							
Air sensing control bore Ø [mm]	KN	3							
Central air sensing connection Ø optional [mm]		12 H7							
Weight [kg]		10,7	10	11	16	10,3	11	12,7	18,2


Segmented clamping bushings
Page 442


Flanges
Page 208


Actuating units
Page 226


Accessory overview
Page 478

Scope of delivery

- Mandrel without spindle flange / without air sensing adapter
- Coupling ring
- Trimming sleeve for SAD segmented clamping bushings
- Mounting aid depending on size

MANDO T812 size 3. Technical data

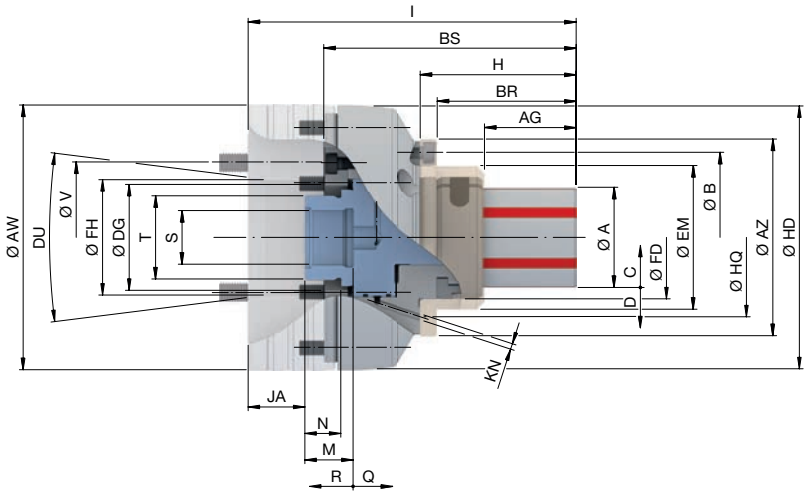

Size		**3**							
Clamping range [mm]	A	**50 – 80**							
Spindle nose	DU	A2-4	A2-5	A2-6	A2-8	AP120	AP140	AP170	AP220
Run-out ≤ [mm]		0,015							
Max. radial clamping force [kN]		105							
Max. axial compression force [kN]		25							
Max. clamping length [mm]	AG	44,5							
Reserve stroke in Ø [mm]	D	0,4							
Release stroke in Ø [mm]	C	0,5							
RPM n max. [1/min.]		6000							
Reserve stroke axial [mm]	Q	2							
Release stroke axial [mm]	R	2,5							
Reception workpiece end-stop	FD	Ø 83 f7							
End-stop outer Ø [mm]	AZ	120							
End-stop outer Ø 2 [mm]	EM	105							
Bolt hole circle end-stop	B	LK Ø 104 [3 x M6]							
Length [mm]	H	89,5							
Length 2 [mm]	BS	141,5							
Total length [mm]	I	179			183	179			
Depth [mm]	BR	80,0							
Connecting thread inside	S	M30 x 1,5							
Connecting thread outside	T	M44 x 1,5							
Distance [mm]	JA	30			34	30			
Depth of thread [mm]	M	25,5							
Thread length [mm]	N	19							
Max. drawtube Ø [mm]	DG	54							
Minimum length of DG [mm]		13							
Bore-Ø	FH	61	79,6	103,2	100	77	80	103	
Bolt hole circle	V	LK Ø 82,6 [3 x M10]	LK Ø 104,8 [6 x M10]	LK Ø 133,4 [6 x M12]	LK Ø 171,4 [6 x M16]	LK Ø 104,8 [6 x M10]		LK Ø 133,4 [6 x M12]	LK Ø 171,4 [6 x M16]
Outer Ø [mm]	AW	140		165	210	140	150	180	230
Outer Ø 2 [mm]	HD	139							
Air sensing control bolt hole circle-Ø [mm]	HQ	100							
Air sensing control bore Ø [mm]	KN	3							
Central air sensing connection Ø optional [mm]		12 H7							
Weight [kg]		11,8	11,2	12,2	17	11,4	12	13,8	19,3


Segmented clamping bushings
Page 442


Flanges
Page 208


Actuating units
Page 226


Accessory overview
Page 478

Scope of delivery

- Mandrel without spindle flange / without air sensing adapter
- Coupling ring
- Trimming sleeve for SAD segmented clamping bushings
- Mounting aid depending on size

MANDO T812 size 4. Technical data

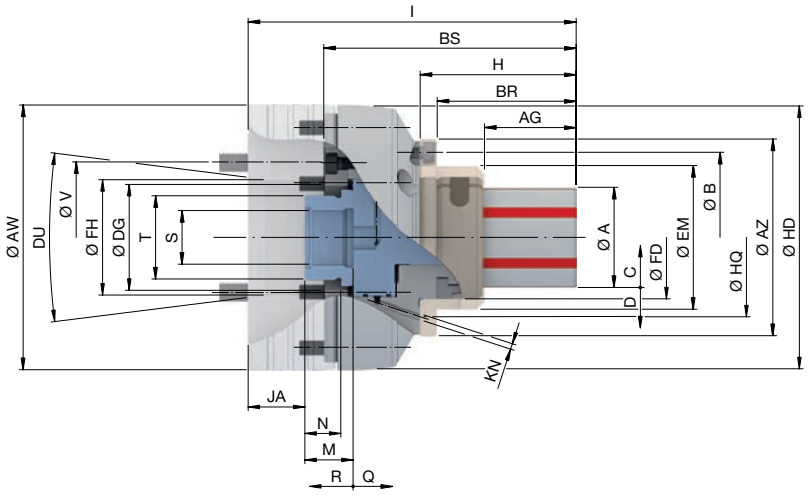

Size		4							
Clamping range [mm]	A	**69 – 100**							
Spindle nose	DU	A2-4	A2-5	A2-6	A2-8	AP120	AP140	AP170	AP220
Run-out ≤ [mm]		0,015							
Max. radial clamping force [kN]		150							
Max. axial compression force [kN]		35							
Max. clamping length [mm]	AG	52,5							
Reserve stroke in Ø [mm]	D	0,5							
Release stroke in Ø [mm]	C	0,6							
RPM n max. [1/min.]		6000							
Reserve stroke axial [mm]	Q	2,5							
Release stroke axial [mm]	R	3							
Reception workpiece end-stop	FD	Ø 103 f7							
End-stop outer Ø [mm]	AZ	138							
End-stop outer Ø 2 [mm]	EM	124							
Bolt hole circle end-stop	B	LK Ø 124 [3 x M6]							
Length [mm]	H	100							
Length 2 [mm]	BS	151,5							
Total length [mm]	I	189			193	189			
Depth [mm]	BR	90,5							
Connecting thread inside	S	M30 x 1,5							
Connecting thread outside	T	M44 x 1,5							
Distance [mm]	JA	30			34	30			
Depth of thread [mm]	M	25,5							
Thread length [mm]	N	19							
Max. drawtube Ø [mm]	DG	54							
Minimum length of DG [mm]		13							
Bore-Ø	FH	61	79,6	103,2	100	77	80	103	
Bolt hole circle	V	LK Ø 82,6 [3 x M10]	LK Ø 104,8 [6 x M10]	LK Ø 133,4 [6 x M12]	LK Ø 171,4 [6 x M16]	LK Ø 104,8 [6 x M10]		LK Ø 133,4 [6 x M12]	LK Ø 171,4 [6 x M16]
Outer Ø [mm]	AW	140		165	210	140	150	180	230
Outer Ø 2 [mm]	HD	139							
Air sensing control bolt hole circle-Ø [mm]	HQ	116							
Air sensing control bore Ø [mm]	KN	3							
Central air sensing connection Ø optional [mm]		12 H7							
Weight [kg]		13,2	12,6	13,6	18,5	12,8	13,4	15,2	20,7


Segmented clamping bushings
Page 442


Flanges
Page 208


Actuating units
Page 226


Accessory overview
Page 478

Scope of delivery

- Mandrel without spindle flange / without air sensing adapter
- Coupling ring
- Trimming sleeve for SAD segmented clamping bushings
- Mounting aid depending on size

Order overview. Flanges for MANDO mandrels

Size	Figure	Spindle nose DU	Flange height [mm] AP	Interface X	Outer Ø [mm] AW	Bolt hole circle V	In stock	Material no.
XXS – 4 / A – F	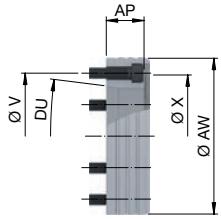	A2-4	40	Ø 131	140	LK Ø 82,6 [3 x M10]	✔	10014772
		A2-5	40			LK Ø 104,8 [6 x M10]	✔	10014771
			77				✔	10014781
			85				✔	10014782
		A2-6	40		165	LK Ø 133,4 [6 x M12]	✔	10014770
			60				✔	10014783
			80				✔	10014784
			100				✔	10014785
		A2-8	44		210	LK Ø 171,4 [6 x M16]	✔	10014773
	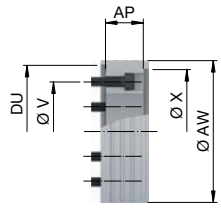	AP120	40		140	LK Ø 104,8 [6 x M10]	✔	10014774
		AP140			150		✔	10014775
		AP170			180	LK Ø 133,4 [6 x M12]	✔	10014776
		AP220			230	LK Ø 171,4 [6 x M16]	✔	10014777
5 – 7	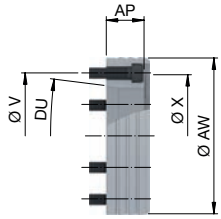	A2-6	63,5	Ø 219	235	LK Ø 133,4 [6 x M12]	✔	10014778
		A2-8	67,5			LK Ø 171,4 [6 x M16]	✔	10014779
		A2-11	73,5		280	LK Ø 235 [6 x M20]	✔	10014780

Flanges size 5 – 7 AP upon request.
Machine spindle standard DIN ISO 702-1.

Mandrel MANDO

MANDO G

The best choice for gear cutting



Clamping solutions for the gear-cutting sector are unique and have very special requirements. Consequently, it is not easy to find the suitable clamping device, particularly in the case of part variation and smaller lot sizes. The conventional solution is to use fixtures that are more or less effective.

However, this is now history. With the MANDO G211 you are relying on a standard segmented mandrel. You profit from in-stock segmented clamping bushings. The rigid and narrow mandrel with optimized tool run-out contour is ideal for use in gear cutting applications. It can also be used for gear shaping or grinding. Three end-stop levels that are placed with different proximity to the workpiece make it possible to use individual workpiece end-stops. Also a coolant connection ensures process reliability.

Whether you design the machine connection on your own, or whether you want a complete solution from us extending to the quick change-over system, in every case you profit from radial clamping with pull-back effect – and this incredibly increases the rigid clamping. Therefore you have complete control of accuracy and vibration.

Key advantages

- Standard segmented mandrel with slim interference contour
- Rigid radial clamping with pull-back effect
- Large clamping range and vibration dampening due to vulcanized clamping elements
- Three end-stop levels
- Integrated flushing channels



MANDO G in use

MANDO G211 in detail

Designation	
1 Draw bolt [with safeguard to prevent unscrewing when in open position] 2 Vulcanized segmented clamping bushing made of case-hardened steel [60 HRC] 3 Integrated ejector pins for forced opening of the clamping 4 Three flush holes to prevent contamination 5 Mounting possibility for end-stops 6 Torsional safety lock of segmented clamping bushing	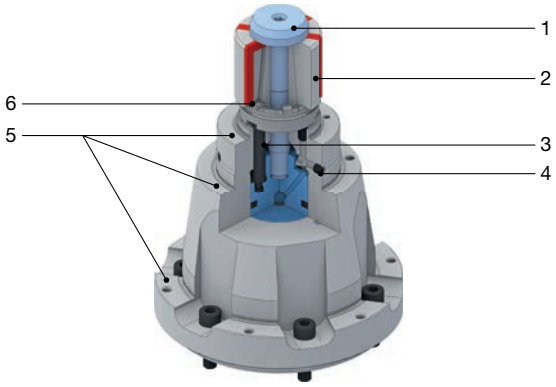

MANDO G211. Technical data and order overview

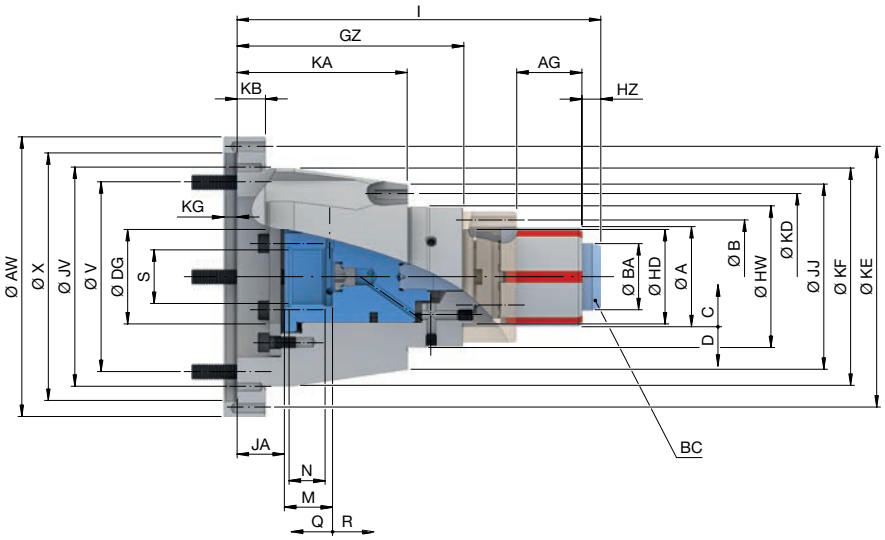

Size		0	1	2	3	4
Clamping range [mm]	A	20 – 28	26 – 38	36 – 54	50 – 80	69 – 120
Run-out ≤ [mm]				0,010		
Max. radial clamping force [kN]		42		85	105	150
Max. axial drawtube force [pull / push] [kN]		10		20	25	35
Max. clamping length [mm]	AG	22	26	43	49	59
Reserve stroke in Ø [mm]	D		0,3		0,4	0,5
Release stroke in Ø [mm]	C	0,4		0,5		0,6
RPM n max. [1/min.]				600		
Reserve stroke axial [mm]	Q		1,5		2	2,5
Release stroke axial [mm]	R	2		2,5		3
Max. actuating torque [Nm]	BC	10	20	25	55	
Draw bolt Ø [mm]	BA	19	25	35	49	68
Draw bolt head height [mm]	HZ	7,5		10		16
Bolt hole circle end-stop	B	LK Ø 42 [3 x M4]	LK Ø 50 [3 x M4]	LK Ø 60 [3 x M4]	LK Ø 75 [3 x M4]	
Bolt hole circle end-stop 2	KD	LK Ø 65 [3 x M6]	LK Ø 72 [3 x M6]	LK Ø 88 [3 x M6]	LK Ø 102 [3 x M6]	LK Ø 88 [3 x M5]
Bolt hole circle end-stop 3	KE			LK Ø 138 [3 x M6]		
Total length [mm]	I	171	178,5	192,5	198,5	213
Connecting thread inside	S			M30 x 1,5		
Distance [mm]	JA			25		
Depth of thread [mm]	M			25,5		
Thread length [mm]	N			19		
Max. drawtube Ø [mm]	DG		50		60	
Minimum length of DG [mm]				13		
Interface	X			Ø 131 H7		
Bolt hole circle	V			LK Ø 116 [6 x M8]		
Bolt hole circle 2	JV			LK Ø 116 [6 x M5]		
Outer Ø [mm]	AW			148		
Outer Ø 2 [mm]	HD	32 f8	38 f8	50 f8	62 f8	75 f8
Outer Ø 3 [mm]	HW	50 f8	58 f8	75 f8	85 f8	
Outer Ø 4 [mm]	JJ	75	82	98	114	115
Outer Ø 5 [mm]	KF			115 f8		
End-stop height [mm]	GZ	125		120		
End-stop height 2 [mm]	KA		90		70	90
End-stop height 3 [mm]	KB			15		
Fitting depth [mm]	KG			7		
Weight [kg]		5,9		7,5	7,7	9,7
In stock		✔	✔	✔	✔	✔
Material no.		10001051	10001052	10001053	10001054	10001055

Customer-specific flanges and drawtube adapters available upon request.

		
Segmented clamping bushings Page 442	Actuating units Page 226	Accessory overview Page 478

Scope of delivery

- Mandrel without spindle flange
- Draw bolt

MAXXOS

The hexagonal, super-strong mandrel



Mandrel MAXXOS

MAXXOS T211 is a mandrel with a hexagonal pyramid shape instead of a round taper – perfect for demanding and reliable process manufacturing. Through the hexagonal clamping pyramid, maximum transmission forces can be realized. The segmented clamping bushing with the hexagon socket sits on the clamping pyramid with an absolute positive fit, which enables maximum machining capacity with less vibration and thereby less tool wear. The lubrication, combined with its leak-tightness ensures an extremely constant production flow and therefore maximum reliability. By the way, our segmented clamping bushings offer a factory-standard run-out accuracy of ≤ 10 µm. If you need even greater precision, there are two additional levels of run-out quality to choose from. Even a run-out accuracy of ≤ 2 µm is possible upon request.

Overall the mandrel covers a clamping diameter range from 18 to 100 mm. The clamping ranges of the respective sizes are designed to overlap. As a rule – depending on the clamping diameter – you can choose from two to three different mandrel sizes. The larger mandrel always means more stability and rigidity, the smaller mandrel can cover a greater quantity of smaller workpieces if necessary.

Those who place more value on process reliability and optimum torque transmissions are very happy with the MAXXOS T211.

MAXXOS mandrel with hexagonal pyramid shape reduces your costs!

Key advantages

- I.D. clamping mandrel for clamping diameter 18 mm to 100 mm, in stock
- High transferable torques and holding forces
- Reduced tool wear through high rigidity
- Run-out accuracy ≤ 0.01 mm / 0.007 mm possible
- Run-out accuracy ≤ 0.002 mm possible upon request
- Resistant to contamination due to its hexagonal pyramid shape
- Reliable manufacturing process

MAXXOS T211 in detail

Designation	
1 Vulcanized segmented clamping bushing made of case-hardened steel [60 HRC] with positioning 2 Draw bolt [with safeguard to prevent unscrewing when in open position] 3 Lubricating grooves, for optimal holding power 4 End-stop 5 Prepared for air sensing control 6 Spindle flange suitable for all standard mandrel sizes	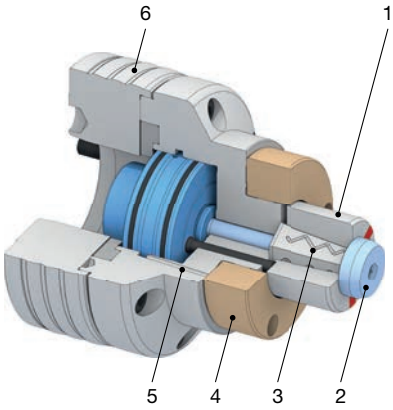

Overlapping clamping ranges of the different mandrel sizes

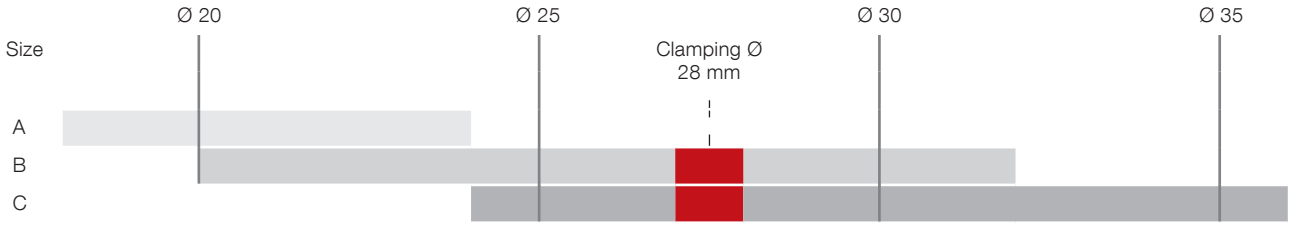

Example of the right selection of the mandrel size

Clamping diameter 28 mm:

- Condition: flexibility for additional workpieces with smaller clamping diameters → Size B
- Condition: higher process reliability due to greater rigidity and holding power → Size C

Max. run-out accuracy of the segmented clamping bushing

	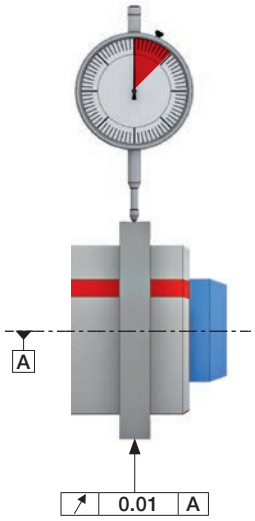	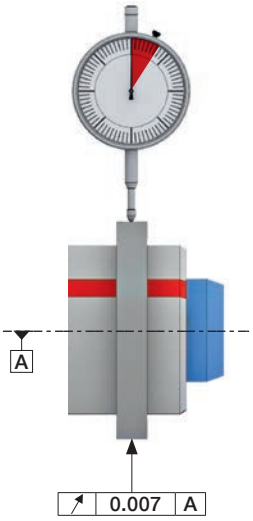
Variant	**Standard**	**Premium**
Run-out	≤ 10 µm	≤ 7 µm
Description	Measured on a ground run-out control ring in accordance with the HAINBUCH standard	

Order overview. MAXXOS mandrels

Size	Clamping range [mm]	In stock	Material no.
A	18 – 24	✔	10001324
B	20 – 32	✔	10001325
C	24 – 39	✔	10001326
D	32 – 50	✔	10001327
E	39 – 68	✔	10001328
F	50 – 100	✔	10001329

Scope of delivery

- Mandrel without spindle flange / without air sensing adapter
- Draw bolt

MAXXOS T211 size A. Technical data

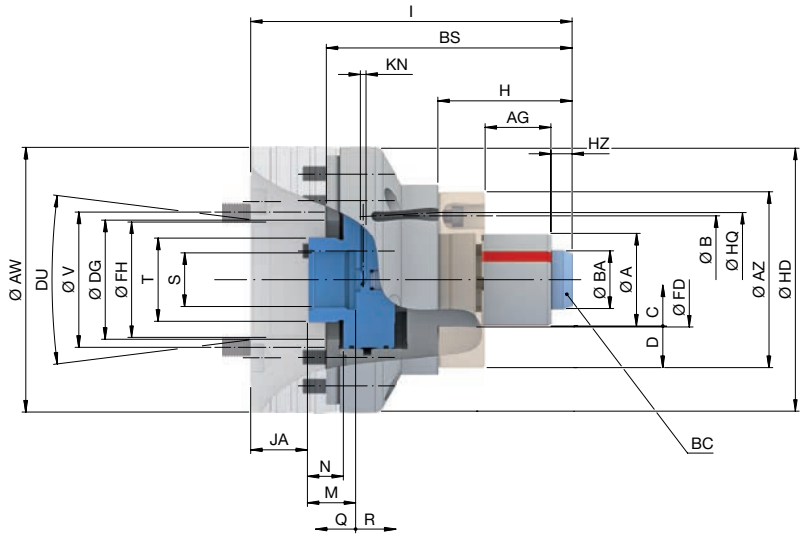

Size		A							
Clamping range [mm]	A	**18 – 24**							
Spindle nose	DU	A2-4	A2-5	A2-6	A2-8	AP120	AP140	AP170	AP220
Run-out ≤ [mm]		0,010							
Max. radial clamping force [kN]		27							
Max. axial drawtube force [pull / push] [kN]		7,5							
Max. clamping length [mm]	AG	20							
Reserve stroke in Ø [mm]	D	0,26							
Release stroke in Ø [mm]	C	0,18							
RPM n max. [1/min.]		7000							
Reserve stroke axial [mm]	Q	2							
Release stroke axial [mm]	R	2							
Max. actuating torque [Nm]	BC	7							
Draw bolt Ø [mm]	BA	17							
Draw bolt head height [mm]	HZ	7,5							
Reception workpiece end-stop	FD	Ø 32 f7							
End-stop outer Ø [mm]	AZ	65							
Bolt hole circle end-stop	B	LK Ø 50 [3 x M6]							
Length [mm]	H	40							
Length 2 [mm]	BS	100							
Total length [mm]	I	140			144	140			
Connecting thread inside	S	M30 x 1,5							
Connecting thread outside	T	M44 x 1,5							
Distance [mm]	JA	30			34	30			
Depth of thread [mm]	M	25,5							
Thread length [mm]	N	19							
Max. drawtube Ø [mm]	DG	54							
Minimum length of DG [mm]		13							
Bore-Ø	FH	61	79,6	103,2	100	77	80	103	
Bolt hole circle	V	LK Ø 82,6 [3 x M10]	LK Ø 104,8 [6 x M10]	LK Ø 133,4 [6 x M12]	LK Ø 171,4 [6 x M16]	LK Ø 104,8 [6 x M10]		LK Ø 133,4 [6 x M12]	LK Ø 171,4 [6 x M16]
Outer Ø [mm]	AW	140		165	210	140	150	180	230
Outer Ø 2 [mm]	HD	139							
Air sensing control bolt hole circle-Ø [mm]	HQ	58							
Air sensing control bore Ø [mm]	KN	3							
Central air sensing connection Ø optional [mm]		12 H7							
Weight [kg]		8,5	10,7	12,4	13,6	8,1	8,7	10,5	16,1


Segmented clamping bushings
Page 448


Flanges
Page 224


Actuating units
Page 226


Accessory overview
Page 478

MAXXOS T211 size B. Technical data

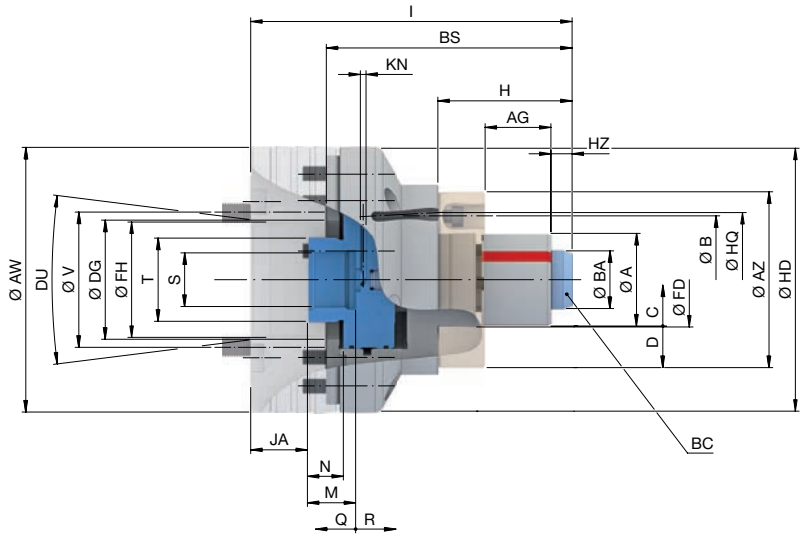

Size		B							
Clamping range [mm]	A	20 – 32							
Spindle nose	DU	A2-4	A2-5	A2-6	A2-8	AP120	AP140	AP170	AP220
Run-out ≤ [mm]		0,010							
Max. radial clamping force [kN]		36							
Max. axial drawtube force [pull / push] [kN]		10							
Max. clamping length [mm]	AG	22,5							
Reserve stroke in Ø [mm]	D	0,26							
Release stroke in Ø [mm]	C	0,17							
RPM n max. [1/min.]		7000							
Reserve stroke axial [mm]	Q	2							
Release stroke axial [mm]	R	2							
Max. actuating torque [Nm]	BC	10							
Draw bolt Ø [mm]	BA	19							
Draw bolt head height [mm]	HZ	7,5							
Reception workpiece end-stop	FD	Ø 32 f7							
End-stop outer Ø [mm]	AZ	65							
Bolt hole circle end-stop	B	LK Ø 50 [3 x M6]							
Length [mm]	H	40							
Length 2 [mm]	BS	100							
Total length [mm]	I	140							
Connecting thread inside	S	M30 x 1,5							
Connecting thread outside	T	M44 x 1,5							
Distance [mm]	JA	30							
Depth of thread [mm]	M	25,5							
Thread length [mm]	N	19							
Max. drawtube Ø [mm]	DG	54							
Minimum length of DG [mm]		13							
Bore-Ø	FH	61	79,6	103,2	100	77	80	103	
Bolt hole circle	V	LK Ø 82,6 [3 x M10]	LK Ø 104,8 [6 x M10]	LK Ø 133,4 [6 x M12]	LK Ø 171,4 [6 x M16]	LK Ø 104,8 [6 x M10]		LK Ø 133,4 [6 x M12]	LK Ø 171,4 [6 x M16]
Outer Ø [mm]	AW	140		165	210	140	150	180	230
Outer Ø 2 [mm]	HD	139							
Air sensing control bolt hole circle-Ø [mm]	HQ	64							
Air sensing control bore Ø [mm]	KN	3							
Central air sensing connection Ø optional [mm]		12 H7							
Weight [kg]		8,9	11,1	12,8	14	8,5	9,1	10,9	16,5


Segmented clamping bushings
Page 448


Flanges
Page 224


Actuating units
Page 226


Accessory overview
Page 478

MAXXOS T211 size C. Technical data

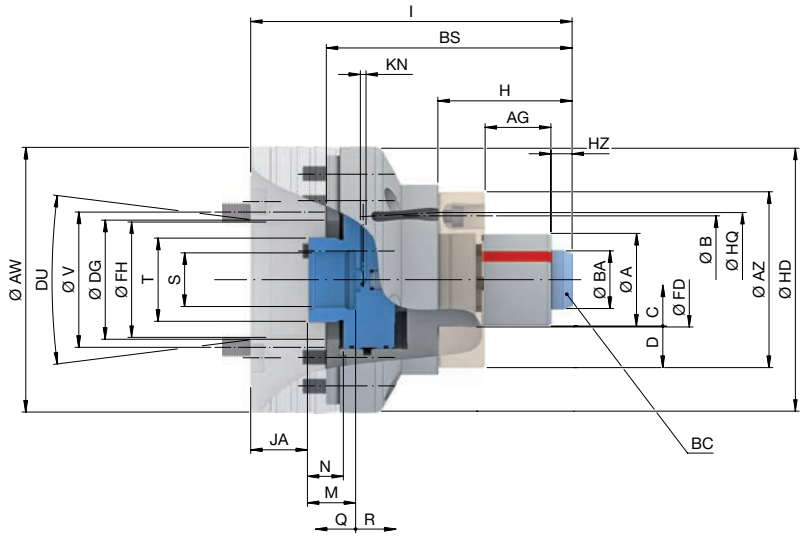

Size		C							
Clamping range [mm]	A	**24 – 39**							
Spindle nose	DU	A2-4	A2-5	A2-6	A2-8	AP120	AP140	AP170	AP220
Run-out ≤ [mm]		0,010							
Max. radial clamping force [kN]		51							
Max. axial drawtube force [pull / push] [kN]		16							
Max. clamping length [mm]	AG	24							
Reserve stroke in Ø [mm]	D	0,4							
Release stroke in Ø [mm]	C	0,26							
RPM n max. [1/min.]		7000							
Reserve stroke axial [mm]	Q	2							
Release stroke axial [mm]	R	2							
Max. actuating torque [Nm]	BC	15							
Draw bolt Ø [mm]	BA	23							
Draw bolt head height [mm]	HZ	11							
Reception workpiece end-stop	FD	Ø 41 f7							
End-stop outer Ø [mm]	AZ	69							
Bolt hole circle end-stop	B	LK Ø 55 [3 x M6]							
Length [mm]	H	53,5							
Length 2 [mm]	BS	110							
Total length [mm]	I	150			154	150			
Connecting thread inside	S	M30 x 1,5							
Connecting thread outside	T	M44 x 1,5							
Distance [mm]	JA	30			34	30			
Depth of thread [mm]	M	25,5							
Thread length [mm]	N	19							
Max. drawtube Ø [mm]	DG	54							
Minimum length of DG [mm]		13							
Bore-Ø	FH	61	79,6	103,2	100	77	80	103	
Bolt hole circle	V	LK Ø 82,6 [3 x M10]	LK Ø 104,8 [6 x M10]	LK Ø 133,4 [6 x M12]	LK Ø 171,4 [6 x M16]	LK Ø 104,8 [6 x M10]		LK Ø 133,4 [6 x M12]	LK Ø 171,4 [6 x M16]
Outer Ø [mm]	AW	140		165	210	140	150	180	230
Outer Ø 2 [mm]	HD	139							
Air sensing control bolt hole circle-Ø [mm]	HQ	64							
Air sensing control bore Ø [mm]	KN	3							
Central air sensing connection Ø optional [mm]		12 H7							
Weight [kg]		8,6	10,8	12,5	13,7	8,2	8,8	10,6	16,2


Segmented clamping bushings
Page 448


Flanges
Page 224


Actuating units
Page 226


Accessory overview
Page 478

MAXXOS T211 size D. Technical data

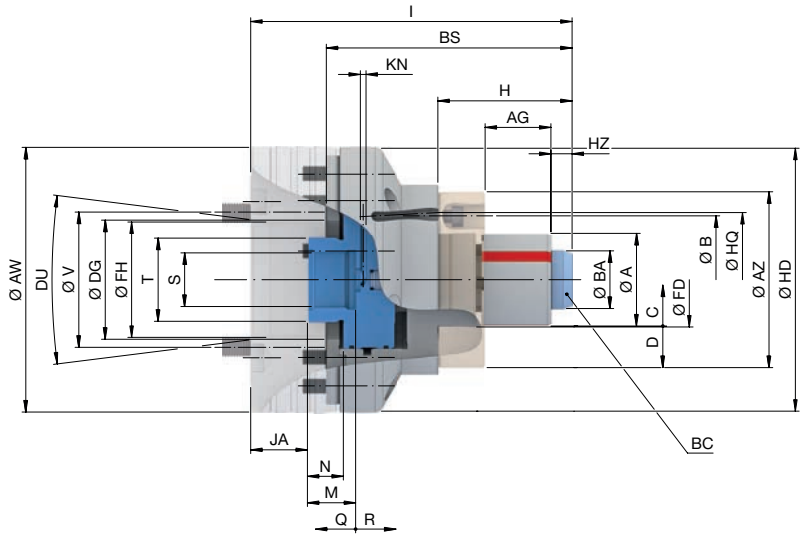

Size		D							
Clamping range [mm]	A	32 – 50							
Spindle nose	DU	A2-4	A2-5	A2-6	A2-8	AP120	AP140	AP170	AP220
Run-out ≤ [mm]		0,010							
Max. radial clamping force [kN]		70							
Max. axial drawtube force [pull / push] [kN]		22							
Max. clamping length [mm]	AG	35,3							
Reserve stroke in Ø [mm]	D	0,4							
Release stroke in Ø [mm]	C	0,3							
RPM n max. [1/min.]		7000							
Reserve stroke axial [mm]	Q	2							
Release stroke axial [mm]	R	2,5							
Max. actuating torque [Nm]	BC	20							
Draw bolt Ø [mm]	BA	30,5							
Draw bolt head height [mm]	HZ	11,2							
Reception workpiece end-stop	FD	Ø 50 f7							
End-stop outer Ø [mm]	AZ	93							
Bolt hole circle end-stop	B	LK Ø 78 [3 x M6]							
Length [mm]	H	71							
Length 2 [mm]	BS	130							
Total length [mm]	I	170			174	170			
Connecting thread inside	S	M30 x 1,5							
Connecting thread outside	T	M44 x 1,5							
Distance [mm]	JA	30			34	30			
Depth of thread [mm]	M	25,5							
Thread length [mm]	N	19							
Max. drawtube Ø [mm]	DG	62,5							
Minimum length of DG [mm]		13							
Bore-Ø	FH	61	79,6	103,2	100	77	80	103	
Bolt hole circle	V	LK Ø 82,6 [3 x M10]	LK Ø 104,8 [6 x M10]	LK Ø 133,4 [6 x M12]	LK Ø 171,4 [6 x M16]	LK Ø 104,8 [6 x M10]		LK Ø 133,4 [6 x M12]	LK Ø 171,4 [6 x M16]
Outer Ø [mm]	AW	140		165	210	140	150	180	230
Outer Ø 2 [mm]	HD	139							
Air sensing control bolt hole circle-Ø [mm]	HQ	82							
Air sensing control bore Ø [mm]	KN	3							
Central air sensing connection Ø optional [mm]		12 H7							
Weight [kg]		9,3	11,5	13,3	14,4	8,9	9,5	11,3	16,9


Segmented clamping bushings
Page 448


Flanges
Page 224


Actuating units
Page 226


Accessory overview
Page 478

MAXXOS T211 size E. Technical data

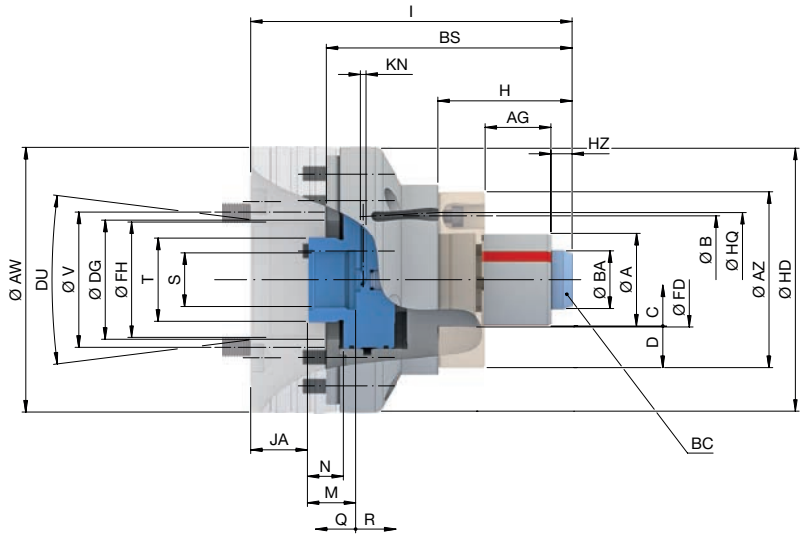

Size		E							
Clamping range [mm]	A	39 – 68							
Spindle nose	DU	A2-4	A2-5	A2-6	A2-8	AP120	AP140	AP170	AP220
Run-out ≤ [mm]		0,010							
Max. radial clamping force [kN]		86							
Max. axial drawtube force [pull / push] [kN]		27							
Max. clamping length [mm]	AG	45,3							
Reserve stroke in Ø [mm]	D	0,4							
Release stroke in Ø [mm]	C	0,3							
RPM n max. [1/min.]		7000							
Reserve stroke axial [mm]	Q	2							
Release stroke axial [mm]	R	2,5							
Max. actuating torque [Nm]	BC	25							
Draw bolt Ø [mm]	BA	38							
Draw bolt head height [mm]	HZ	11,2							
Reception workpiece end-stop	FD	Ø 65 f7							
End-stop outer Ø [mm]	AZ	96							
Bolt hole circle end-stop	B	LK Ø 80 [3 x M6]							
Length [mm]	H	78							
Length 2 [mm]	BS	140							
Total length [mm]	I	180			184	180			
Connecting thread inside	S	M30 x 1,5							
Connecting thread outside	T	M44 x 1,5							
Distance [mm]	JA	30			34	30			
Depth of thread [mm]	M	25,5							
Thread length [mm]	N	19							
Max. drawtube Ø [mm]	DG	62,5							
Minimum length of DG [mm]		13							
Bore-Ø	FH	61	79,6	103,2	100	77	80	103	
Bolt hole circle	V	LK Ø 82,6 [3 x M10]	LK Ø 104,8 [6 x M10]	LK Ø 133,4 [6 x M12]	LK Ø 171,4 [6 x M16]	LK Ø 104,8 [6 x M10]		LK Ø 133,4 [6 x M12]	LK Ø 171,4 [6 x M16]
Outer Ø [mm]	AW	140		165	210	140	150	180	230
Outer Ø 2 [mm]	HD	139							
Air sensing control bolt hole circle-Ø [mm]	HQ	84							
Air sensing control bore Ø [mm]	KN	3							
Central air sensing connection Ø optional [mm]		12 H7							
Weight [kg]		9,9	12,1	13,9	15	9,5	10,1	11,9	17,5


Segmented clamping bushings
Page 448


Flanges
Page 224


Actuating units
Page 226


Accessory overview
Page 478

MAXXOS T211 size F. Technical data

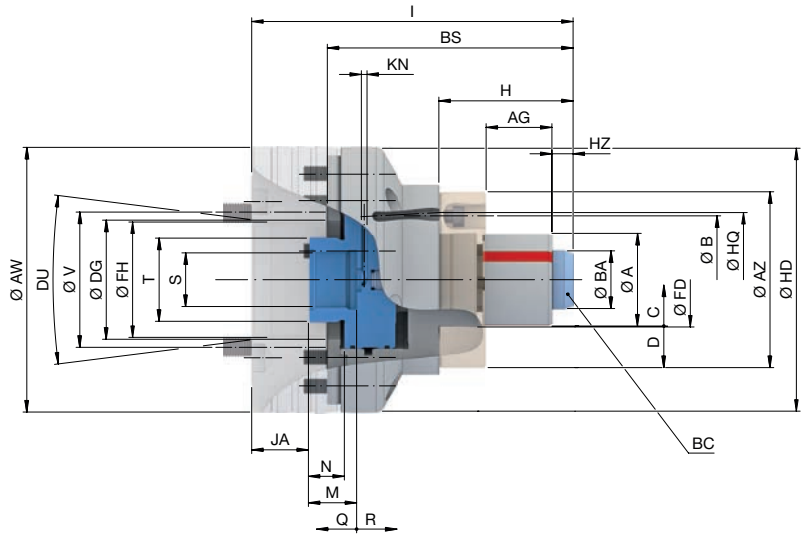

Size		F							
Clamping range [mm]	A	**50 – 100**							
Spindle nose	DU	A2-4	A2-5	A2-6	A2-8	AP120	AP140	AP170	AP220
Run-out ≤ [mm]		0,010							
Max. radial clamping force [kN]		143							
Max. axial drawtube force [pull / push] [kN]		45							
Max. clamping length [mm]	AG	45,3							
Reserve stroke in Ø [mm]	D	0,4							
Release stroke in Ø [mm]	C	0,3							
RPM n max. [1/min.]		7000							
Reserve stroke axial [mm]	Q	2							
Release stroke axial [mm]	R	2,5							
Max. actuating torque [Nm]	BC	55							
Draw bolt Ø [mm]	BA	49							
Draw bolt head height [mm]	HZ	11,7							
Reception workpiece end-stop	FD	Ø 65 f7							
End-stop outer Ø [mm]	AZ	96							
Bolt hole circle end-stop	B	LK Ø 80 [3 x M6]							
Length [mm]	H	78							
Length 2 [mm]	BS	140							
Total length [mm]	I	180			184	180			
Connecting thread inside	S	M30 x 1,5							
Connecting thread outside	T	M44 x 1,5							
Distance [mm]	JA	30			34	30			
Depth of thread [mm]	M	25,5							
Thread length [mm]	N	19							
Max. drawtube Ø [mm]	DG	62,5							
Minimum length of DG [mm]		13							
Bore-Ø	FH	61	79,6	103,2	100	77	80	103	
Bolt hole circle	V	LK Ø 82,6 [3 x M10]	LK Ø 104,8 [6 x M10]	LK Ø 133,4 [6 x M12]	LK Ø 171,4 [6 x M16]	LK Ø 104,8 [6 x M10]		LK Ø 133,4 [6 x M12]	LK Ø 171,4 [6 x M16]
Outer Ø [mm]	AW	140		165	210	140	150	180	230
Outer Ø 2 [mm]	HD	139							
Air sensing control bolt hole circle-Ø [mm]	HQ	84							
Air sensing control bore Ø [mm]	KN	3							
Central air sensing connection Ø optional [mm]		12 H7							
Weight [kg]		10,2	12,4	14,2	15,3	9,8	10,4	12,2	17,8


Segmented clamping bushings
Page 448


Flanges
Page 224


Actuating units
Page 226


Accessory overview
Page 478

Flanges for MAXXOS mandrels

Size	Figure	Spindle nose DU	Flange height [mm] AP	Interface X	Outer Ø [mm] AW	Bolt hole circle V	In stock	Material no.
XXS – 4 / A – F	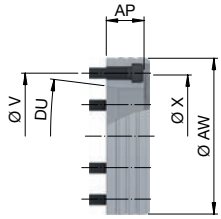	A2-4	40	Ø 131	140	LK Ø 82,6 [3 x M10]	✔	10014772
		A2-5	40			LK Ø 104,8 [6 x M10]	✔	10014771
			77				✔	10014781
			85				✔	10014782
		A2-6	40		165	LK Ø 133,4 [6 x M12]	✔	10014770
			60				✔	10014783
			80				✔	10014784
			100				✔	10014785
		A2-8	44		210	LK Ø 171,4 [6 x M16]	✔	10014773
	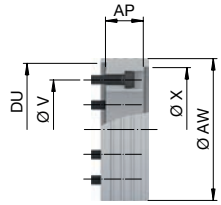	AP120	40		140	LK Ø 104,8 [6 x M10]	✔	10014774
		AP140			150		✔	10014775
		AP170			180	LK Ø 133,4 [6 x M12]	✔	10014776
		AP220			230	LK Ø 171,4 [6 x M16]	✔	10014777

Machine spindle standard DIN ISO 702-1.

Mandrel MAXXOS

Actuating units

Use MANDO and MAXXOS segmented mandrels for stationary clamping



Mandrel actuating units ms dock / hs dock

Complete machining made easy: You cannot only use our MANDO and MAXXOS segmented mandrels on the lathe, you can also use them in stationary mode. Simply screw the mandrel onto the ms dock [manually actuated] or hs dock [hydraulically actuated] and you can clamp your workpiece from the inside, stationary mode. Precise, without vibration and with minimum set-up effort. The extremely wear-resistant segmented clamping bushing of case-hardened chromium-nickel-steel with the rubber between the segments, especially developed by HAINBUCH, makes it possible. The hand-actuated ms dock in conjunction with stationary MANDO or MAXXOS segmented mandrels is ideal for machining centers, measuring machines, radial drill presses, parallel and angle plate clampings or for clamping on dividing heads.

hs dock is an absolute powerhouse that enables hydraulic implementation of MANDO or MAXXOS segmented mandrels on machining centers. Media supply can be freely selected. It is actuated either from the side or via a base plate from below. Perfect when automation is involved.

The rotating ms dock version is applicable for max. rpm and grinding machines.

Key advantages

- Mandrels can be used on machining center
- ms dock rotating for lathes without clamping cylinder
- Manual / hydraulic mandrel actuation
- Ideal for 5-sided machining
- Clamping range Ø 8 – 200 mm

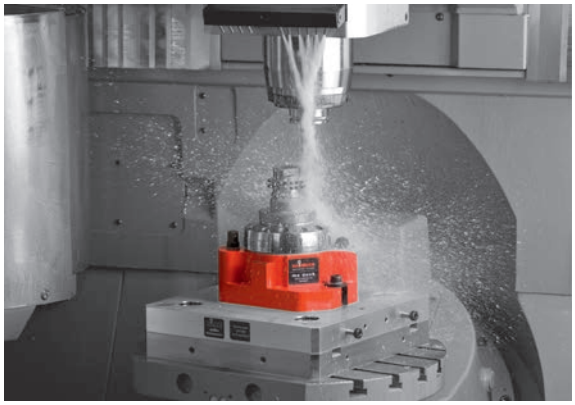

ms dock mandrel actuating unit in use



hs dock mandrel actuating unit in use

Mandrel actuating units ms dock / hs dock

Actuating units at a glance

	ms dock	hs dock
	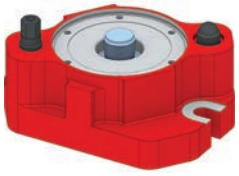	
Description	Manual actuating unit	Hydraulic actuating unit
Variant		Hydraulic clamping, hydraulic release; hydraulic clamping with spring support, hydraulic release
Advantages	■ Manual actuation – a clamping cylinder is not required ■ Sensitive manual clamping is possible	■ Hydraulic actuation ■ Ideal for automated clamping ■ Can be combined as desired for multiple clamping
Adaptations	 MANDO T211 [Mandrel with draw bolt]  MANDO T212 [Mandrel without draw bolt]  MANDO T812 [Deadlength mandrel without draw bolt]  MANDO G211 [Mandrel, e.g. for gear cutting with draw bolt]  MAXXOS T211 [Mandrel for the utmost accuracy, with draw bolt]	 MANDO T211 [Mandrel with draw bolt]  MANDO T212 [Mandrel without draw bolt]  MANDO T812 [Deadlength mandrel without draw bolt]  MANDO G211 [Mandrel, e.g. for gear cutting with draw bolt]  MAXXOS T211 [Mandrel for the utmost accuracy, with draw bolt]

Actuating unit ms dock in detail

Designation	
1 Connecting thread for clamping device actuation 2 Central grease nipple, optimal draw-in force due to perfect lubrication 3 Actuating screw 4 Screw slots for mounting 5 Supporting surface for additional holding clamps 6 Interface with cylindrical fit	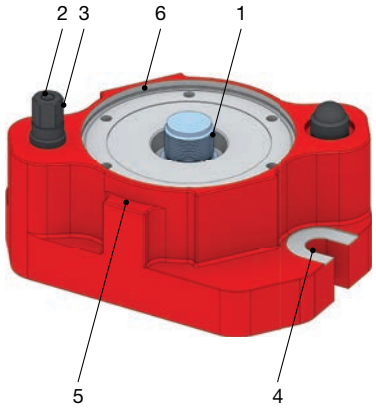

Actuating unit hs dock in detail

Designation	
1 Connecting thread for clamping device actuation 2 Ø for location in the base plate 3 Connections on the side or base to release the clamping 4 Supporting surface for additional holding clamps 5 Connections on the side or base to actuate the clamping 6 Mounting screws 7 Interface with cylindrical fit	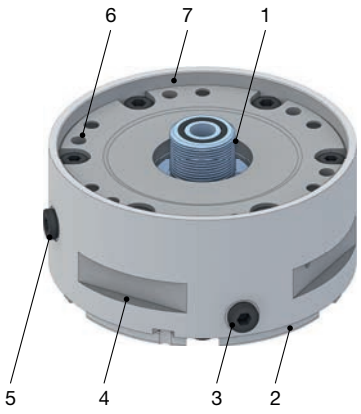

Mandrel actuating unit ms dock rotating in detail

Designation	
1 Interface with cylindrical fit 2 Connecting thread for clamping device actuation 3 Manual actuation via socket wrench	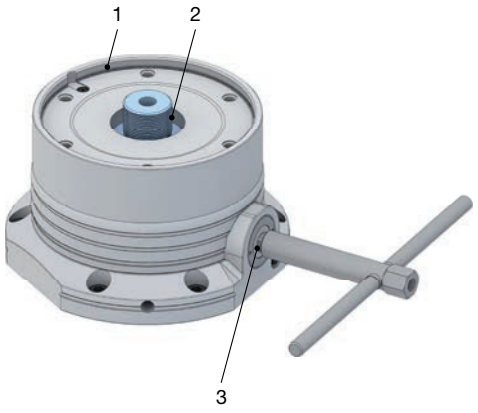

Mandrel actuating units ms dock / hs dock

Actuating unit ms dock. Technical data and order overview

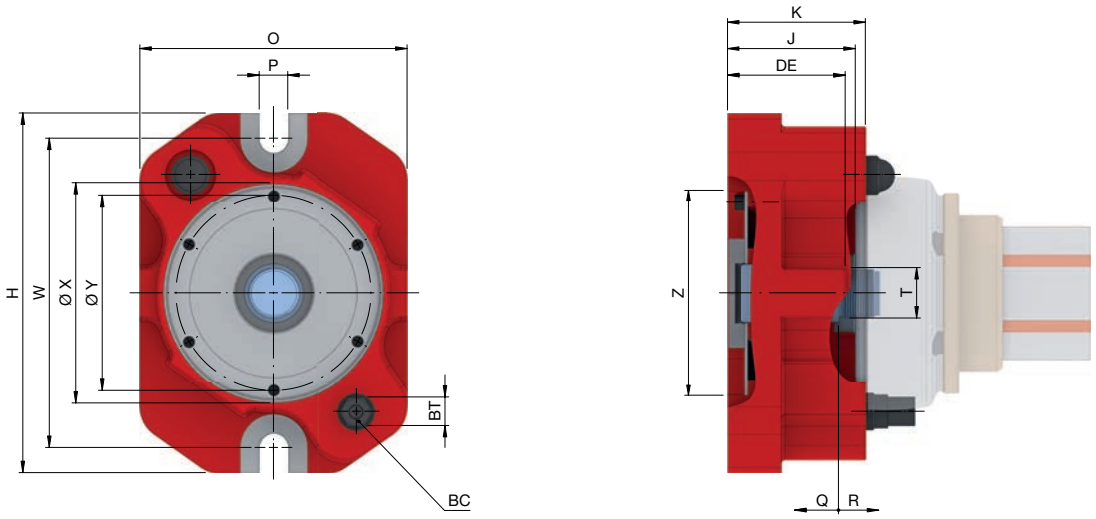

Product		ms dock	
Size		**XXS – 4 / A – F**	**5 – 7**
Max. axial drawtube force [pull / push] [kN]		35	40
Max. actuating torque [Nm]	BC	55	70
RPM n max. [1/min.]		60	
Reserve stroke axial [mm]	Q	4	
Release stroke axial [mm]	R	3	
Interface	X	Ø 131 H6	Ø 219 H6
Interface hole circle	Y	LK Ø 116 [6 x M8]	LK Ø 192 [6 x M10]
Connecting thread outside	T	M30 x 1,5	
Wrench size [SW]	BT	17	
Length [mm]	H	214	310
Height [mm]	J	76	96
Overall height [mm]	K	82	109
Width [mm]	O	159	245
Centering edge [mm]	Z	122	179,5
Screw connection width [mm]	P	17	
Clamping edge height [mm]	DE	70	92
Bolt hole distance [mm]	W	184	280
Weight [kg]		12	36
In stock		✔	✔
Material no.		10001486	10001487


Mandrels
Page 174


Accessory overview
Page 478

Scope of delivery

- Mandrel actuating unit
- Actuating tool

Actuating unit hs dock. Technical data and order overview

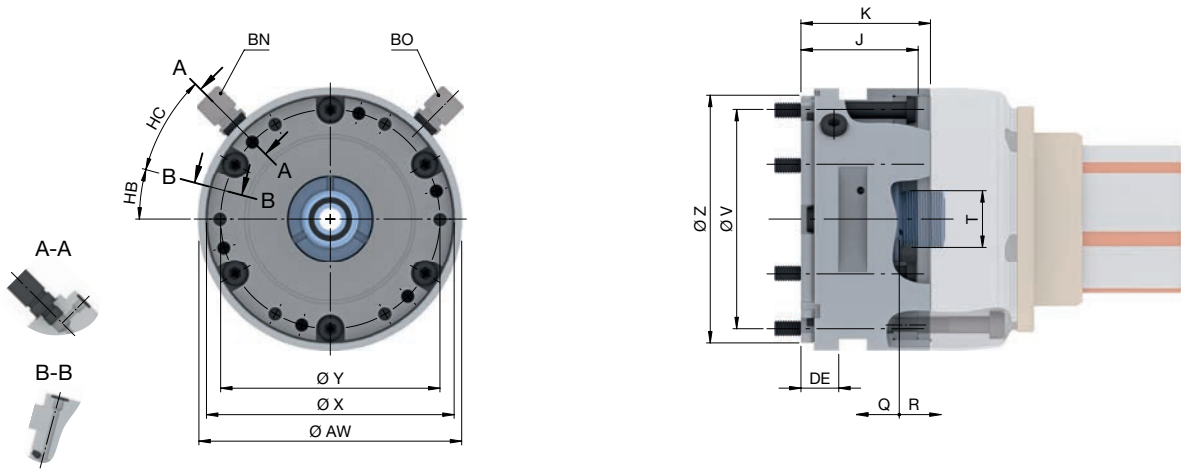

Product		hs dock			
Size		**XXS – 4 / A – F**		**5 – 7**	
Variant		Without spring	With spring	Without spring	With spring
Max. axial drawtube force [pull / push] [kN]		35		45	
Max. actuating pressure [bar]		56	44	51	47
Max. release pressure [bar]		56		51	
RPM n max. [1/min.]		60			
Spring draw force axial [kN]			4		4
Spring release pressure [bar]			12		8
Reserve stroke axial [mm]	Q	3,5	1,5	3,5	1,5
Release stroke axial [mm]	R	4	2	4	2
Interface	X	Ø 131 H6		Ø 219 H6	
Interface hole circle	Y	LK Ø 116 [6 x M8]		LK Ø 192 [6 x M10]	
Connecting thread outside	T	M30 x 1,5			
Height [mm]	J	62			
Overall height [mm]	K	68,5		76	
Outer Ø [mm]	AW	139		230	
Bolt hole circle	V	LK Ø 116 [6 x M8]		LK Ø 192 [6 x M10]	
Centering edge [mm]	Z	131		219	
Clamping edge height [mm]	DE	20			
Release	BN	[1/8"]			
Clamping	BO	[1/8"]			
Release via base plate [°]	HC	30		33	
Clamping via base plate [°]	HB	15		13,5	
Weight [kg]		9		18	
In stock		✔	-	-	-
Material no.		10002070	10002071	10002072	10002073


Mandrels
Page 174


Accessory overview
Page 478

Scope of delivery

- Mandrel actuating unit

Mandrel actuating units ms dock / hs dock

Actuating unit ms dock rotating. Technical data and order overview

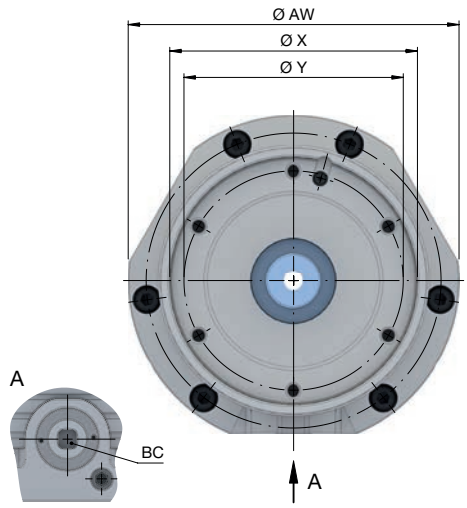

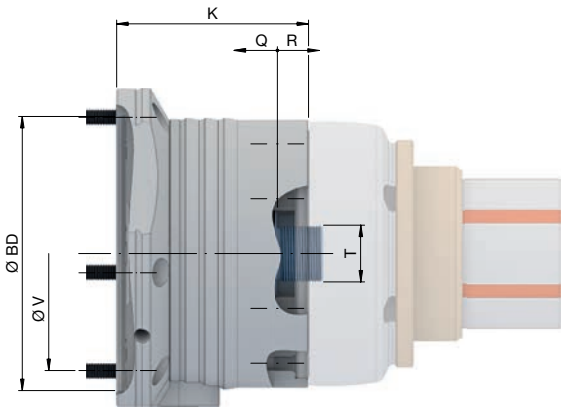

Size		XXS – 4 / A – F
Max. axial drawtube force [pull / push] [kN]		**35**
Max. actuating torque [Nm]	BC	62
RPM n max. [1/min.]		7000
Interface	X	Ø 131 H6
Interface hole circle	Y	LK Ø 116 [6 x M8]
Flange location	BD	Ø 145 H5
Overall height [mm]	K	101,5
Connecting thread outside	T	M30 x 1,5
Reserve stroke axial [mm]	Q	3
Release stroke axial [mm]	R	3
Outer Ø [mm]	AW	174
Bolt hole circle	V	LK Ø 156 [6 x M8]
Weight [kg]		12
In stock		✔
Material no.		10001050

Please note: Only pull-back mandrels [T211, T212, and G211] can be used.




Mandrels
Page 174


Flanges
Page 517


Accessory overview
Page 478

Scope of delivery

- Mandrel actuating unit
- Actuating tool

Mandrel actuating units ms dock / hs dock

Machine-specific mandrels

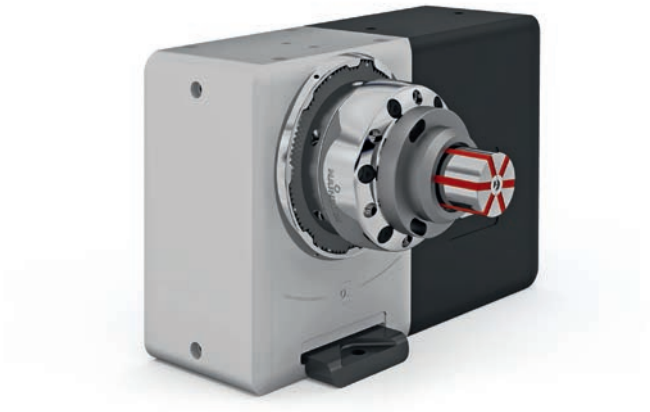

Machine-specific mandrels

Standard or machine specific, which mandrel fits?
In 90 % of all cases, you will find what you are looking for with our standard mandrels, that fit for the following brands, such as:

- Biglia
- Daewoo
- Doosan
- Emco
- Gildemeister
- MAG Boehringer
- MAG Hessapp
- Mazak
- Miyano
- Monforts
- Mori Seiki
- Nakamura
- Okuma
- Scherer
- Spinner
- Takamaz
- Weiler
- Weisser
- and other machine manufacturers

For certain lathes we have designed special mandrels that take the connection or other equipment features of the respective machine into account. You will find a selection to the right, such as

- LEHMANN rotary indexing tables

Of course, we still have much more in the product line.
Simply ask us about it.

MANDO T211 mandrel for pl Lehmann rotary indexing tables. Pull-back / with draw bolt

Size	Type	Segmentspann-büchse	Spindle nose	In stock	Material no.
0	510	sb100r	HSK-A63	-	10001303
1	520	sb210r	A2-5	-	10001304
2	520	sb120r	A2-5	-	10001305
3	530	sb130r	A2-8	-	10001306
4	530	sb140r	A2-8	-	10001307

Incl. drawtube adapter and flange for direct assembly on the rotary indexing table.

MANDO T212 mandrel for pl Lehmann rotary indexing tables. Pull-back / without draw bolt

Size	Type	Segmentspann-büchse	Spindle nose	In stock	Material no.
XXS	507	sb2xxsr	HSK-A63	-	10001308
XS	507	sb2xsr	HSK-A63	-	10001309
S	510	sb2sr	HSK-A63	-	10001310
0	510	sb200r	HSK-A63	-	10001311
1	520	sb210r	A2-5	-	10001312
2	520	sb220r	A2-5	-	10001313
3	530	sb230r	A2-8	-	10001314
4	530	sb240r	A2-8	-	10001315

Incl. drawtube adapter and flange for direct assembly on the rotary indexing table.

MANDO T812 mandrel for pl Lehmann rotary indexing tables. Deadlength / without draw bolt

Size	Type	Segmentspann-büchse	Spindle nose	In stock	Material no.
XXS	507	sb2xxsr	HSK-A63	-	10001316
XS	507	sb2xsr	HSK-A63	-	10001317
S	510	sb2sr	HSK-A63	-	10001318
0	510	sb200r	HSK-A63	-	10001319
1	520	sb210r	A2-5	-	10001320
2	530	sb220r	A2-6	-	10001321
3	530	sb230r	A2-8	-	10001322
4	530	sb240r	A2-8	-	10001323

Includes drawtube adapter and flange for direct mounting on the rotary table.
We can also offer other sizes for your Lehmann partial axis size.
MAXXOS mandrel is likewise available on request.

Overview

Find what's important fast





Stationary clamping devices

	Manual stationary chuck MANOK	240
	Manual stationary chuck MANOK plus	244
	Hydraulic stationary chuck HYDROK	252
	InoFlex centric clamping vise	260

Stationary clamping devices

Stationary standard clamping devices in overview

	MANOK	MANOK plus	HYDROK
			
Description	Manual stationary chuck	Manual stationary chuck with adaptation possibility	Hydraulic stationary chuck with adaptation possibility
Sizes	42, 52, 65, 80, 100	52, 65	SE 40, 65, 80, 100 / RD 32, 42, 52, 65, 80, 100
Clamping range of all sizes [mm]	3 – 100	3 – 65	3 – 100
Variant	RD [round]	SE [hexagonal], RD [round]	SE [hexagonal], RD [round]
Advantages	■ Easy set-up ■ Sensitive manual clamping is possible ■ Ideal for 5-sided machining ■ Clamping is possible with work-piece end-stop or front end-stop	■ Also available in a CFRP light-weight design ■ Sensitive manual clamping is possible ■ Workpiece stabilization through axial draw force applied against the workpiece end-stop ■ Ideal for 5-sided machining	■ Ideal for automated clamping ■ Angular contour requires less space ■ Multiple clamping made possible in the smallest space ■ Ideal for 5-sided machining
Clamping elements	 Clamping head RD	 Clamping head SE  Clamping head RD	 Clamping head SE  Clamping head RD
Adaptations	 Magnet module RD [Adaptation for magnetic clamping]	 MANDO Adapt T211 SE / RD [Mandrel-in-clamping-device, with draw bolt]  MANDO Adapt T212 SE / RD [Mandrel-in-clamping-device, without draw bolt]  Jaw module SE / RD [Adaptation for jaw clamping]  Magnet module SE / RD [Adaptation for magnetic clamping]	 MANDO Adapt T211 SE / RD [Mandrel-in-clamping-device, with draw bolt]  MANDO Adapt T212 SE / RD [Mandrel-in-clamping-device, without draw bolt]  Jaw module SE / RD [Adaptation for jaw clamping]  Magnet module SE / RD [Adaptation for magnetic clamping]
	Page 240	Page 244	Page 252

InoFlex VF



Manual stationary chuck

160, 260

8 – 291

- 4-sided clamping [2x2] with compensation of the opposing jaws
- Ideal for clamping workpieces that are susceptible to deformation
- Large stroke and compensating stroke for each jaw
- For I.D. and O.D. clamping



Jaws

Page 260

MANOK

Small but powerful



It isn't just the price-performance ratio of MANOK that is impressive. With its incredible holding power, precision and rigidity, MANOK has already surprised many users who never would have imagined that this kind of quality could be found in a manual clamping device. In addition, you can also mount an end-stop to the MANOK in no time at all: Simply fasten the inside end-stop directly onto your machine tool table or mount a front end-stop on the face of the clamping taper. That's it!

MANOK is not only practical and economical, but it is also extremely versatile. For instance, the integrated actuation lever makes this possible by functioning as an additional force accumulator and acts as an anti-vibration device during milling.

Key advantages

- Easy set-up
- Sensitive manual clamping is possible
- Ideal for 5-sided machining
- Clamping is possible with workpiece end-stop or front end-stop
- Absolute versatile implementation on machining centers, measuring machines, slotters, broaching machines, drilling machines, laser marking machines etc.
- Workpiece stabilization through axial draw force applied against the workpiece end-stop

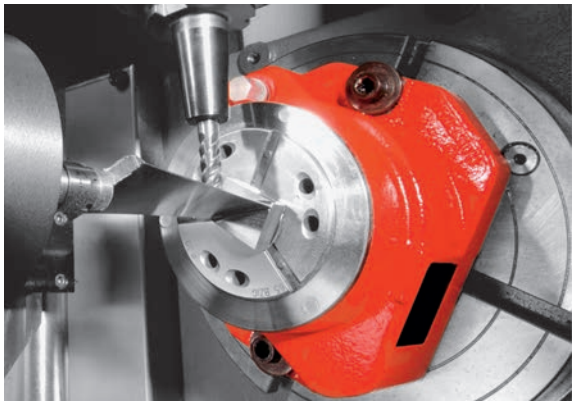

MANOK manual stationary chuck in use.
Photo: OEM Berthold Hermle

Manual stationary chuck MANOK in detail

Designation	
1 Clamping head with hardened steel segments joined in a vulcanization process 2 Torsional safety lock of the clamping head 3 Manual actuation via hexagonal nut 4 Mounting groove 5 Supporting surface for additional holding clamps 6 Reception for front end-stop 7 Full passage available	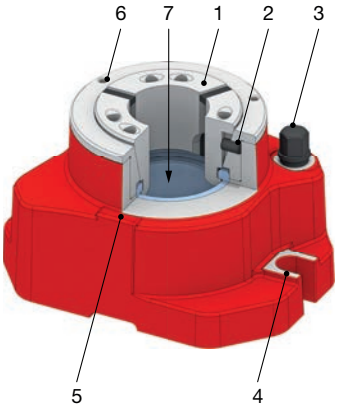

Manual stationary chuck MANOK. Technical data and order overview

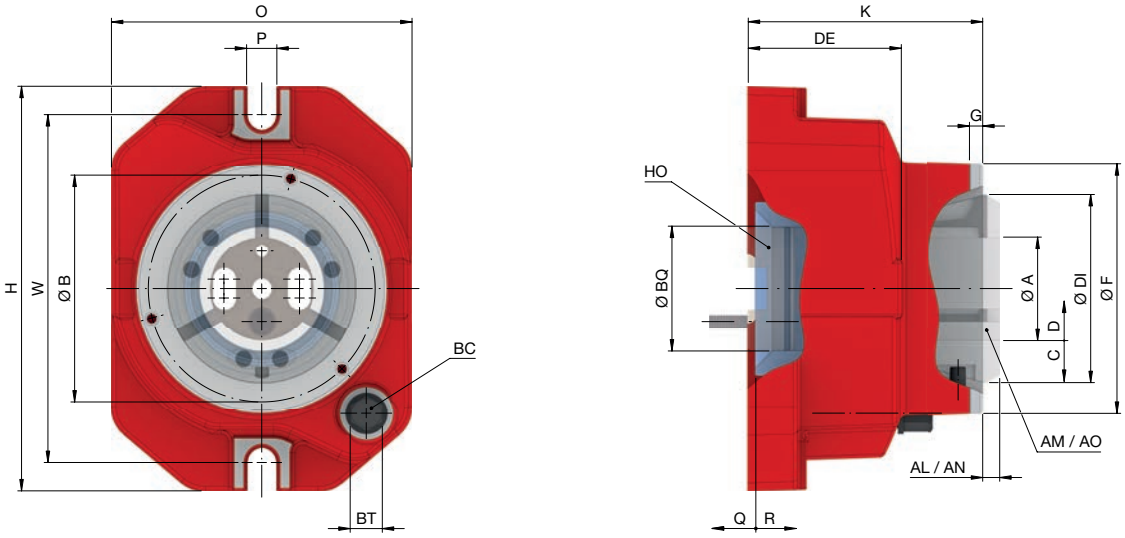

Size		42	52	65	80	100
Clamping range [mm]	A	**3 – 42**	**3 – 52**	**3 – 65**	**4 – 80**	**15 – 100**
Repeatability ≤ [mm]		0,010				
Max. radial clamping force [kN]		80	94	105	115	150
Max. axial drawtube force [pull / push] [kN]		35	40	45	50	65
Max. actuating torque [Nm]	BC	50	60	70	60	80
Bolt hole distance [mm]	W	184			236	
Release stroke in Ø [mm]	C	0,6				2
RPM n max. [1/min.]		60				
Reserve stroke in Ø [mm]	D	1				1,5
Reserve stroke axial [mm]	Q	2				3
Release stroke axial [mm]	R	2,5			5	
Location front end-stop	F	Ø 132 f7			Ø 178 f7	
Centering length [mm]	G	7			11,5	
Bolt hole circle end-stop	B	LK Ø 120 [3 x M6]			LK Ø 165 [3 x M6]	
Ø Capacity [mm]	BQ	56		66	80,5	102
Length [mm]	H	214			264	
Overall height [mm]	K	124			140	
Width [mm]	O	159			210	
Screw connection width [mm]	P	16			16,6	
Clamping edge height [mm]	DE	81			93	
Wrench size [SW]	BT	17				
Head Ø [mm]	DI	80		99,5	115	144,5
Clamping head serrated	AM	SK 42 BZI	SK 52 BZI	SK 65 BZI	SK 80 BZI	SK 100 BZ
Clamping head protrusion length serrated [mm]	AL	9	4	9	4	0
Clamping head smooth	AO	SK 42 BZIG	SK 52 BZIG	SK 65 BZIG	SK 80 BZIG	SK 100 BZG
Clamping head protrusion length smooth [mm]	AN	4				0
Workpiece end-stop	HO	available as accessory				
Weight [kg]		14,3	14,1	12,9	22,3	21,6
In stock		✔	✔	✔	✔	✔
Material no.		10001427	10001426	10001425	10001430	10001424


Clamping heads
Page 430


Magnet module
Page 332


Clamping head adapter
Page 513


Accessory overview
Page 478

Scope of delivery

- Stationary chuck
- Actuation tool

MANOK plus

Incredibly versatile

HAINBUCH SYSTEM

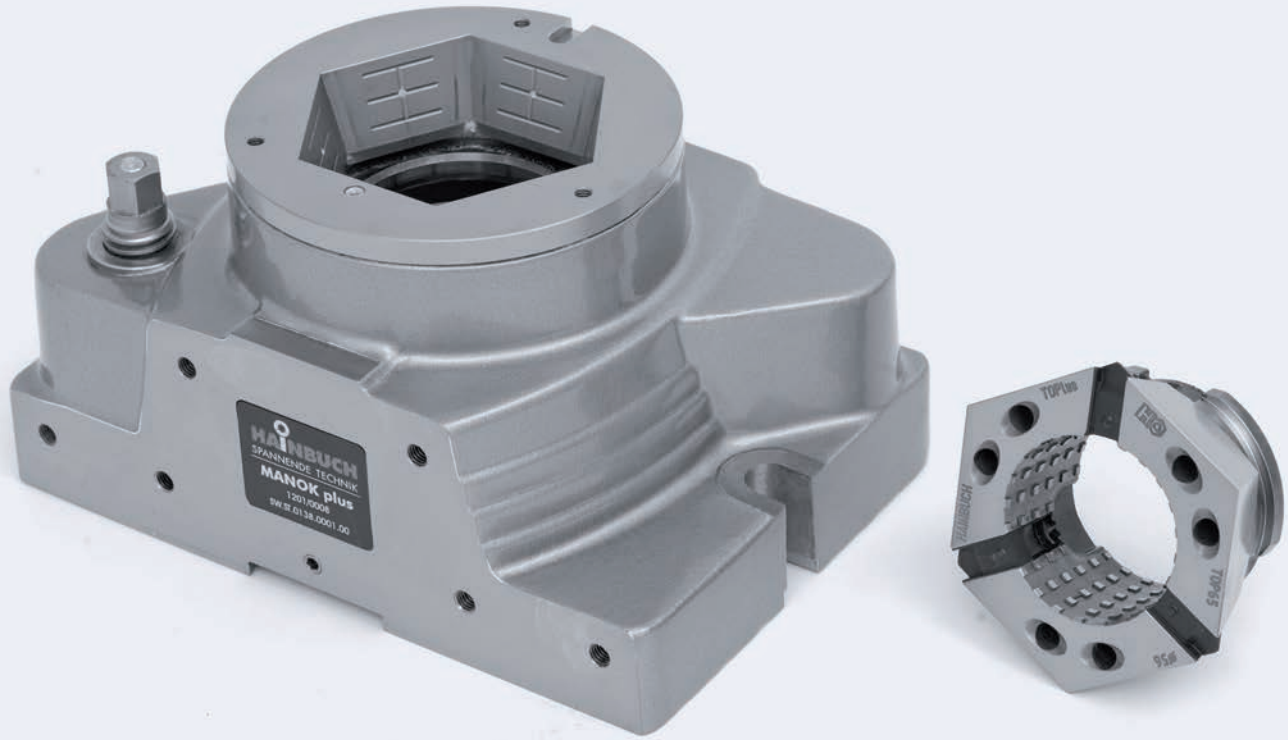

Manual stationary chuck MANOK plus

MANOK plus, the extended variant of our manual MANOK stationary chuck differs through use of adaptation elements. For example, many more clamping possibilities are available to you in combination with the MANDO Adapt mandrel-in-chuck or the jaw module for even larger clamping diameters.

And most recent: Due to the optional lightweight CFRP design, with the MANOK plus CFK you can save half of the weight. The lightweights are easy to set-up and particularly well-suited for milling machines and machining centers with small load weights. Plus they protect machine components, which ultimately helps the machine accuracy. When loading manually or with a handling system, often the only possible solution is a lightweight stationary chuck.

Key advantages

- Also available in a CFRP lightweight design
- Sensitive manual clamping is possible
- Workpiece stabilization through axial draw force applied against the workpiece end-stop
- Ideal for 5-sided machining
- Adaptation devices possible [HAINBUCH SYSTEM]



MANOK plus manual stationary chuck in use

Manual stationary chuck MANOK plus

MANOK plus at a glance

	MANOK plus CFK	MANOK plus
	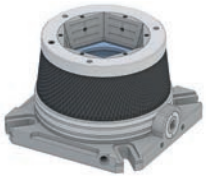	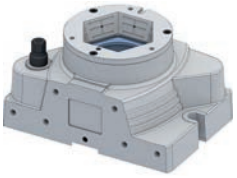
Description	Hand-actuated lightweight clamping device	Manual stationary chuck
Variant	SE [hexagonal] / RD [round]	SE [hexagonal] / RD [round]
Advantages	■ Made of carbon fiber ■ As much as 60 % lighter than the standard model	■ Lateral set-up on optional baseplate is possible
Clamping elements	 Clamping head SE  Clamping head RD	 Clamping head SE  Clamping head RD
Adaptations	 MANDO Adapt T211 SE / RD [Mandrel-in-clamping-device, with draw bolt]  MANDO Adapt T212 SE / RD [Mandrel-in-clamping-device, without draw bolt]  Jaw module SE / RD [Adaptation for jaw clamping]  Magnet module SE / RD [Adaptation for magnetic clamping]	 MANDO Adapt T211 SE / RD [Mandrel-in-clamping-device, with draw bolt]  MANDO Adapt T212 SE / RD [Mandrel-in-clamping-device, without draw bolt]  Jaw module SE / RD [Adaptation for jaw clamping]  Magnet module SE / RD [Adaptation for magnetic clamping

Manual stationary chuck MANOK plus CFK SE in detail

Designation

1 Clamping head with hexagonal geometry for optimal chuck seal and greater clamping force
2 Reception for front end-stop
3 Mounting groove
4 Manual actuation
5 Clamping screw for base end-stop
6 Supporting surface for additional holding clamps
7 Chuck body made of carbon fiber
8 Grease nipple

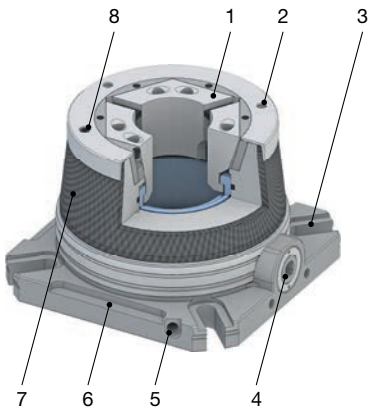

Manual stationary chuck MANOK plus SE in detail

Designation	
1 Clamping head with hexagonal geometry for optimal chuck seal and greater clamping force 2 Reception for front end-stop with guide groove for radial alignment 3 Central grease nipple, optimal draw-in force due to perfect lubrication 4 Manual actuation via hexagonal nut 5 Guide groove for table alignment 6 Thread for mounting end-stops or for horizontal clamping set-up 7 Ground surface for horizontal set-up 8 Reception for front end-stop 9 Full passage after removal of the base end-stop that is accessible from the outside	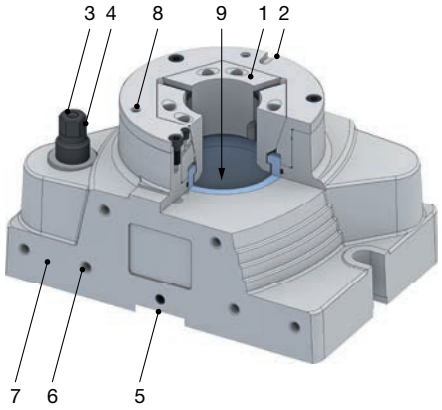

Order overview.
Manual stationary chuck MANOK plus CFK SE / RD

				Clamping elements and adaptations				
								
Product line	Size	Material no.	In stock	Clamping head SE Page 422	MANDO Adapt T211 SE Page 274	MANDO Adapt T212 SE Page 280	Jaw module SE Page 316	Magnet module SE Page 332
SE	52	10000484	-	✔	✔	✔		✔
	65	10000485	-	✔	✔	✔	✔	✔
Product line	Size	Material no.	In stock	Clamping head RD Page 430	MANDO Adapt T211 RD Page 290	MANDO Adapt T212 RD Page 296	Jaw module RD Page 316	Magnet module RD Page 332
RD	52	10000482	-	✔	✔	✔		✔
	65	10000483	-	✔	✔	✔	✔	✔

Detailed technical data follows.

Order overview.
Manual stationary chuck MANOK plus SE / RD

				Clamping elements and adaptations				
								
Product line	Size	Material no.	In stock	Clamping head SE Page 422	MANDO Adapt T211 SE Page 274	MANDO Adapt T212 SE Page 280	Jaw module SE Page 316	Magnet module SE Page 332
SE	65	10001429	✔	✔	✔	✔	✔	✔
Product line	Size	Material no.	In stock	Clamping head RD Page 430	MANDO Adapt T211 RD Page 290	MANDO Adapt T212 RD Page 296	Jaw module RD Page 316	Magnet module RD Page 332
RD	65	10001428	✔	✔	✔	✔	✔	✔

Detailed technical data follows.

Manual stationary chuck MANOK plus

Manual stationary chuck MANOK plus CFK SE. Technical data

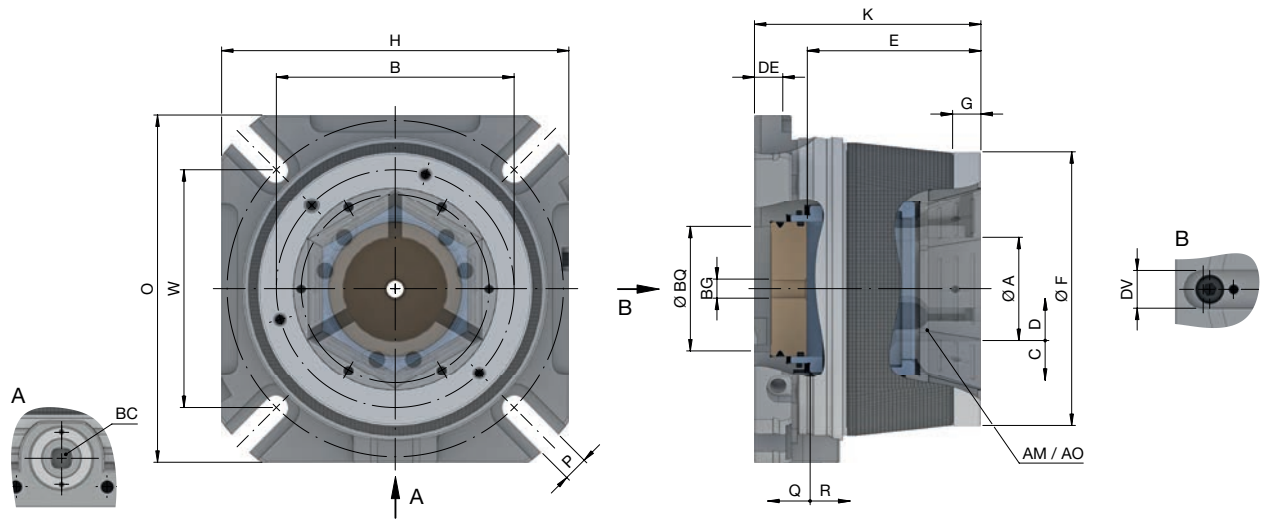

Product line		SE	
Size		**52**	**65**
Clamping range [mm]	A	3 – 52	3 – 65
Repeatability ≤ [mm]		0,010	
Max. radial clamping force [kN]		108	120
Max. axial drawtube force [pull / push] [kN]		40	45
Max. actuating torque [Nm]	BC	75	90
Release stroke in Ø [mm]	C	0,6	
RPM n max. [1/min.]		60	
Reserve stroke in Ø [mm]	D	1	
Reserve stroke axial [mm]	Q	2	
Release stroke axial [mm]	R	2,5	
Location front end-stop	F	Ø 125 f7	Ø 145 f7
Centering length [mm]	G	15	
Bolt hole circle end-stop	B	LK Ø 107 [3 x M6]	LK Ø 126 [3 x M6]
End-stop depth [mm]	E	90	92
End-stop thread size [M]	BG	10	12
Ø Capacity [mm]	BQ	53	66
Length [mm]	H	161	184
Overall height [mm]	K	115	120
Width [mm]	O	161	184
Screw connection width [mm]	P	13	
Clamping edge height [mm]	DE	15	
Bolt hole distance [mm]	W	120	126
Groove seat	DV	14 H7	20 H7
Clamping head serrated	AM	TOP 52	TOP 65
Clamping head smooth	AO	TOP 52 G	TOP 65 G
Weight [kg]		7	10,3
In stock		-	-
Material no.		10000484	10000485

				
Clamping heads Page 422	Adaptations I.D. clamping Page 270	Adaptations jaw clamping Page 316	Magnet module Page 332	Accessory overview Page 478

Scope of delivery

- Stationary chuck
- Base end-stop
- Actuation tool

Manual stationary chuck MANOK plus SE. Technical data

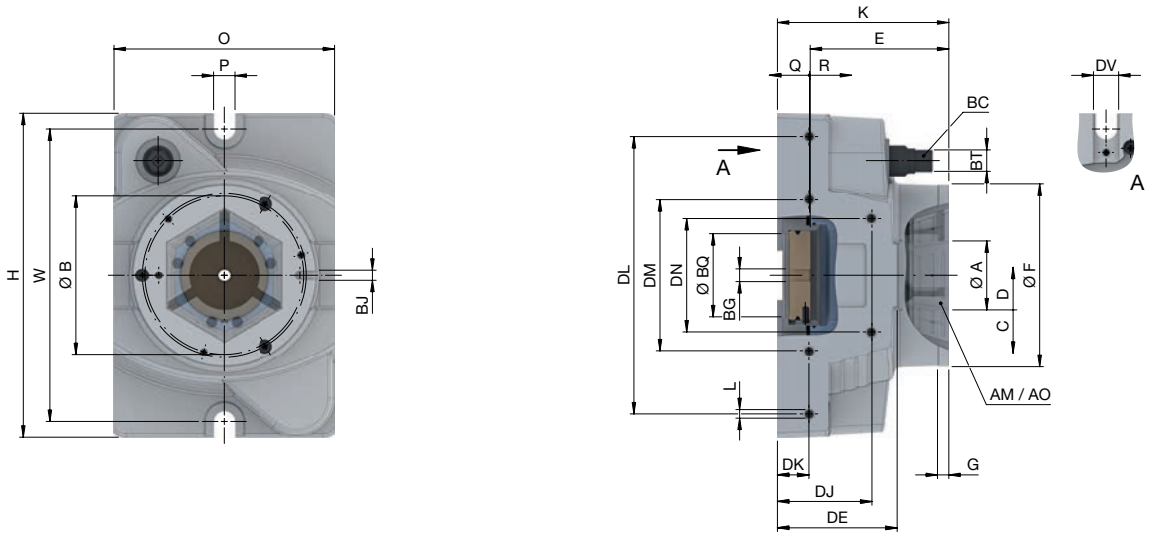

Product line		SE
Size		**65**
Clamping range [mm]	A	3 – 65
Repeatability ≤ [mm]		0,010
Max. radial clamping force [kN]		120
Max. axial drawtube force [pull / push] [kN]		45
Max. actuating torque [Nm]	BC	100
Release stroke in Ø [mm]	C	0,6
RPM n max. [1/min.]		60
Reserve stroke in Ø [mm]	D	1
Reserve stroke axial [mm]	Q	2
Release stroke axial [mm]	R	2,5
Location front end-stop	F	Ø 145 f7
Centering length [mm]	G	9
Bolt hole circle end-stop	B	LK Ø 126 [3 x M6]
Groove width [mm]	BJ	8 H7
End-stop depth [mm]	E	110
End-stop thread size [M]	BG	12
Ø Capacity [mm]	BQ	66
Length [mm]	H	257
Overall height [mm]	K	136
Width [mm]	O	175
Screw connection width [mm]	P	17
Clamping edge height [mm]	DE	95
Thread size [M]	L	8
Screw-on height 1 [mm]	DJ	75
Screw-on height 2 [mm]	DK	25
Screw connection spacing 1 [mm]	DL	220
Screw connection spacing 2 [mm]	DM	120
Screw connection spacing 3 [mm]	DN	90
Bolt hole distance [mm]	W	232
Groove seat	DV	20 H7
Wrench size [SW]	BT	17
Clamping head serrated	AM	TOP 65
Clamping head smooth	AO	TOP 65 G
Weight [kg]		23,5
In stock		✔
Material no.		10001429


Clamping heads
Page 422

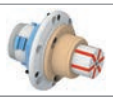
Adaptations I.D. clamping
Page 270


Adaptations jaw clamping
Page 316


Magnet module
Page 332


Accessory overview
Page 478

Scope of delivery

- Stationary chuck
- Base end-stop
- Actuation tool

Manual stationary chuck MANOK plus CFK RD. Technical data

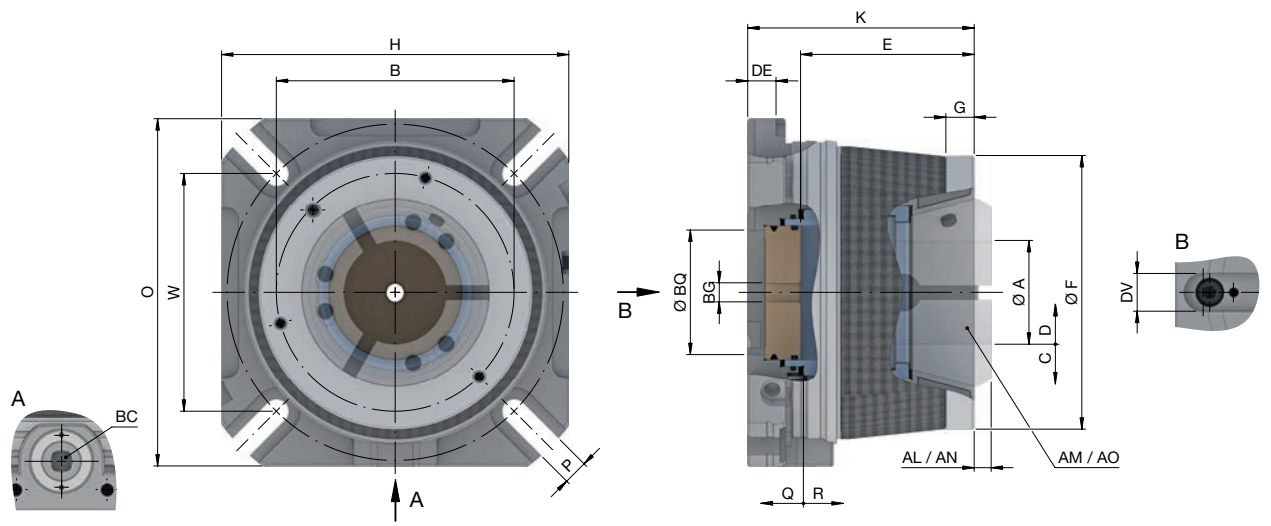

Product line		RD	
Size		**52**	**65**
Clamping range [mm]	A	3 – 52	3 – 65
Repeatability ≤ [mm]		0,010	
Max. radial clamping force [kN]		94	105
Max. axial drawtube force [pull / push] [kN]		40	45
Max. actuating torque [Nm]	BC	75	90
Release stroke in Ø [mm]	C	0,6	
RPM n max. [1/min.]		60	
Reserve stroke in Ø [mm]	D	1	
Reserve stroke axial [mm]	Q	2	
Release stroke axial [mm]	R	2,5	
Location front end-stop	F	Ø 125 f7	Ø 145 f7
Centering length [mm]	G	15	
Bolt hole circle end-stop	B	LK Ø 107 [3 x M6]	LK Ø 126 [3 x M6]
End-stop depth [mm]	E	90	92
End-stop thread size [M]	BG	10	12
Ø Capacity [mm]	BQ	53	66
Length [mm]	H	161	184
Overall height [mm]	K	115	120
Width [mm]	O	161	184
Screw connection width [mm]	P	13	
Clamping edge height [mm]	DE	15	
Bolt hole distance [mm]	W	120	126
Groove seat	DV	14 H7	20 H7
Clamping head serrated	AM	SK 52 BZI	
Clamping head protrusion length serrated [mm]	AL	4	9
Clamping head smooth	AO	SK 52 BZIG	SK 65 BZIG
Clamping head protrusion length smooth [mm]	AN	4	
Weight [kg]		7	10,3
In stock		-	-
Material no.		10000482	10000483


Clamping heads
Page 430


Adaptations I.D. clamping
Page 270


Adaptations jaw clamping
Page 316


Magnet module
Page 332


Accessory overview
Page 478

Scope of delivery

- Stationary chuck
- Base end-stop
- Actuation tool

Manual stationary chuck MANOK plus RD. Technical data

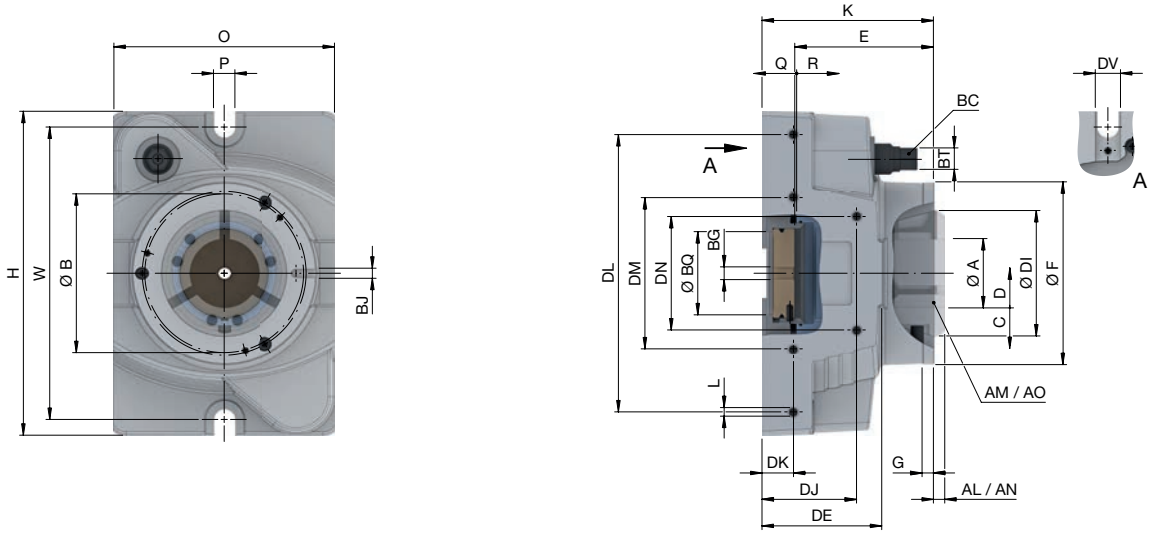

Product line		RD
Size		**65**
Clamping range [mm]	A	3 – 65
Repeatability ≤ [mm]		0,010
Max. radial clamping force [kN]		105
Max. axial drawtube force [pull / push] [kN]		45
Max. actuating torque [Nm]	BC	100
Release stroke in Ø [mm]	C	0,6
RPM n max. [1/min.]		60
Reserve stroke in Ø [mm]	D	1
Reserve stroke axial [mm]	Q	2
Release stroke axial [mm]	R	2,5
Location front end-stop	F	Ø 145 f7
Centering length [mm]	G	9
Bolt hole circle end-stop	B	LK Ø 126 [3 x M6]
Groove width [mm]	BJ	8 H7
End-stop depth [mm]	E	110
End-stop thread size [M]	BG	12
Ø Capacity [mm]	BQ	66
Length [mm]	H	257
Overall height [mm]	K	136
Width [mm]	O	175
Screw connection width [mm]	P	17
Clamping edge height [mm]	DE	95
Thread size [M]	L	8
Screw-on height 1 [mm]	DJ	75
Screw-on height 2 [mm]	DK	25
Screw connection spacing 1 [mm]	DL	220
Screw connection spacing 2 [mm]	DM	120
Screw connection spacing 3 [mm]	DN	90
Bolt hole distance [mm]	W	232
Groove seat	DV	20 H7
Wrench size [SW]	BT	17
Head Ø [mm]	DI	99,5
Clamping head serrated	AM	SK 65 BZI
Clamping head protrusion length serrated [mm]	AL	9
Clamping head smooth	AO	SK 65 BZIG
Clamping head protrusion length smooth [mm]	AN	4
Weight [kg]		23,5
In stock		✔
Material no.		10001428


Clamping heads
Page 430


Adaptations I.D. clamping
Page 270


Adaptations jaw clamping
Page 316


Magnet module
Page 332


Accessory overview
Page 478

Scope of delivery

- Stationary chuck
- Base end-stop
- Actuation tool

HYDROK

Convincing in performance

HAINBUCH SYSTEM



Hydraulic stationary chuck HYDROK

5-axis machining or efficient multiple clamping – with the HYDROK we offer a hydraulically actuated stationary chuck that provides even more implementation possibilities. Depending on the size, you can use it with all clamping device adaptations, such as the MANDO Adapt mandrel-in-clamping device or the jaw module. In the future you can also rely completely on the intelligent HAINBUCH SYSTEM, also for your stationary clamping device.

Our smallest modules: HYDROK 40 SE and 32 RD. Their modular base plates can be easily fitted together and enable multiple clamping setups with incredible holding forces in the most confined spaces. And with an additional tandem cylinder you can even generate the full clamping force with a weaker hydraulic unit.

Key advantages

- Ideal for automated clamping
- Angular contour requires less space
- Multiple clamping made possible in the smallest space
- Ideal for 5-sided machining
- Clamping is possible with workpiece end-stop or front end-stop
- Adaptation devices possible [HAINBUCH SYSTEM]



HYDROK hydraulic stationary chuck in use

HYDROK SE in detail

Designation	
1 Clamping head with hexagonal geometry for optimal chuck seal and greater clamping force 2 Central grease nipple, optimum tool life and holding power due to perfect lubrication 3 Side and/or bottom hydraulic connections available 4 Reception for front end-stop 5 Full passage available	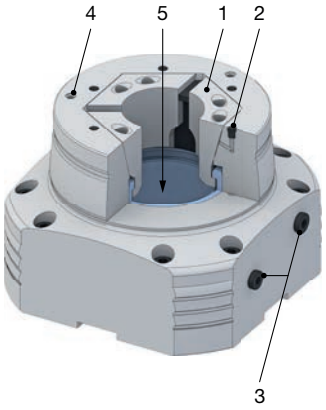

HYDROK RD in detail

Designation	
1 Clamping head with hardened steel segments joined in a vulcanization process 2 Torsional safety lock of the clamping head 3 Side and/or bottom hydraulic connections available 4 Reception for front end-stop 5 Full passage available	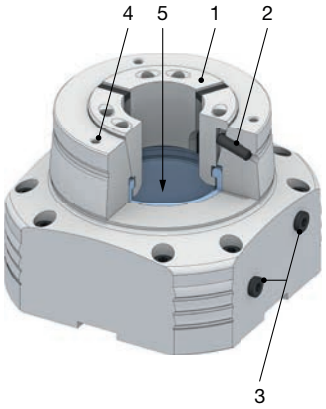

HYDROK SE size 40 in detail

Designation	
1 Clamping head with hexagonal geometry for optimal chuck seal and greater clamping force 2 HYDROK SE 40 3 Tandem cylinder, insert at low actuation pressure [optional] 4 Modular base plate, several adaptation possibilities for multiple clamping [optional] 5 Hydraulic connections 6 Location for depth end-stop 7 Reception for front end-stop	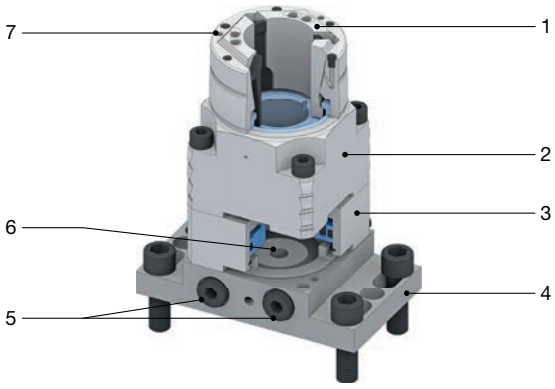

HYDROK RD size 32 in detail

Designation	
1 Clamping head with hardened steel segments joined in a vulcanization process 2 HYDROK RD 32 3 Tandem cylinder, insert at low actuation pressure [optional] 4 Modular base plate, several adaptation possibilities for multiple clamping [optional] 5 Hydraulic connections 6 Location for depth end-stop 7 Torsional safety lock of the clamping head 8 Reception for front end-stop	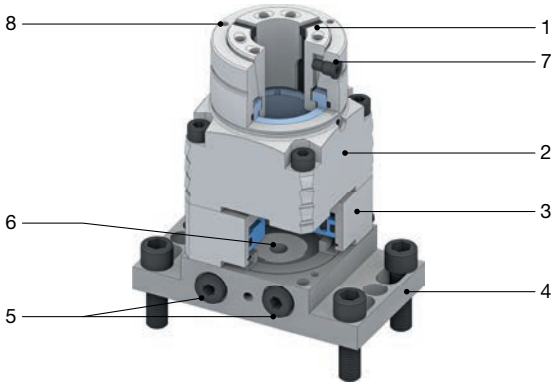

Order overview.
Hydraulic stationary chuck HYDROK SE

Product line	Size	Material no.	In stock	Clamping elements and adaptations: Clamping head SE Page 422	MANDO Adapt T211 SE Page 274	MANDO Adapt T212 SE Page 280	Jaw module SE Page 316	Magnet module SE Page 332
SE	40	10001416	✔	✔				
	52	10001415	✔	✔	✔	✔		✔
	65	10001407	✔	✔	✔	✔	✔	✔
	100	10001412	✔	✔	✔	✔	✔	✔

Detailed technical data follows.

Order overview.
Hydraulic stationary chuck HYDROK RD

Product line	Size	Material no.	In stock	Clamping elements and adaptations: Clamping head RD Page 430	MANDO Adapt T211 RD Page 290	MANDO Adapt T212 RD Page 296	Jaw module RD Page 316	Magnet module RD Page 332
RD	32	10001414	✔	✔				
	42	10001408	✔	✔	✔	✔		
	52	10001409	✔	✔	✔	✔		✔
	65	10001406	✔	✔	✔	✔	✔	✔
	80	10001410	✔	✔	✔	✔	✔	✔
	100	10001411	✔	✔	✔	✔	✔	✔

Detailed technical data follows.

Scope of delivery
- Stationary chuck

HYDROK SE size 40. Technical data

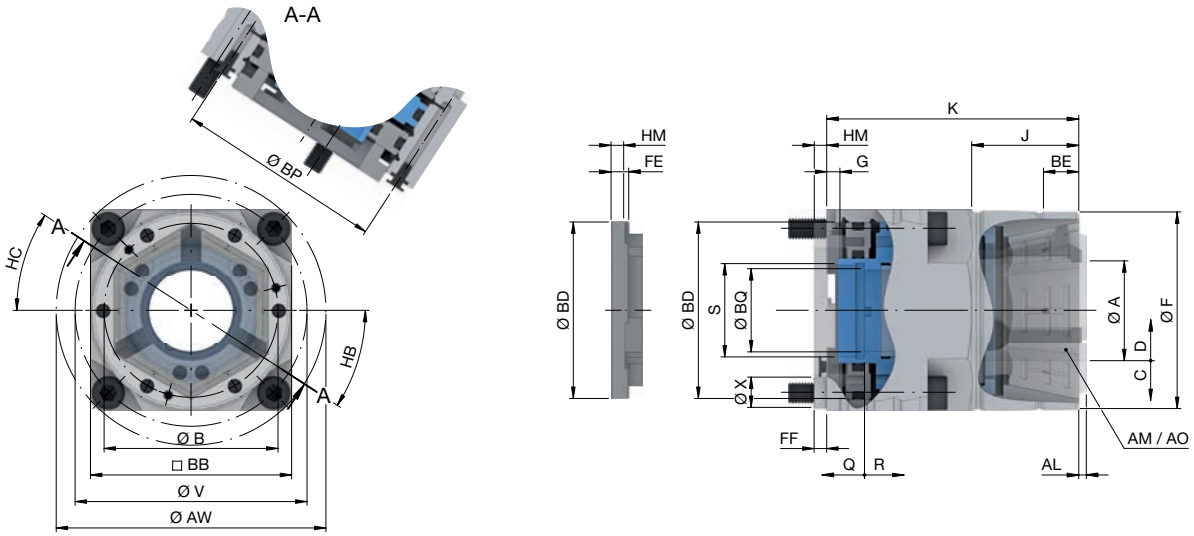

Product line		SE
Size		**40**
Clamping range [mm]	A	3 – 40
Repeatability ≤ [mm]		0,010
Max. axial drawtube force [pull / push] [kN]		27
Max. radial clamping force [kN]		75
Max. actuating pressure [bar]		110
Release stroke in Ø [mm]	C	0,5
RPM n max. [1/min.]		60
Reserve stroke in Ø [mm]	D	0,8
Reserve stroke axial [mm]	Q	2
Release stroke axial [mm]	R	2
Location front end-stop	F	Ø 78 f7
Length flange location [mm]	BE	14
Bolt hole circle end-stop	B	LK Ø 69 [3 x M4]
Ø Capacity [mm]	BQ	33
Height [mm]	J	42,5
Overall height [mm]	K	100
Outer variant [mm]	BB	79,8
Connecting position [mm]	BP	82
Outer Ø [mm]	AW	106 h7
Bolt hole circle	V	LK Ø 92 [4 x M8]
Clamping via base plate [°]	HB	33
Release via base plate [°]	HC	33
Clamping head serrated	AM	TOP 40
Clamping head protrusion length serrated [mm]	AL	3
Clamping head smooth	AO	TOP 40 G
Centering height 1 [mm]	FE	7
Centering height 2 [mm]	FF	5
Interface	X	Ø 12 H7
Flange location	BD	Ø 70 H7/g7
Connecting thread inside	S	M38 x 1
Centering length [mm]	G	5
Installation depth [mm]	HM	5 +0,05
Weight [kg]		2,79
In stock		✔
Material no.		10001416

Through adaptation of the tandem cylinder to HYDROK 40 SE, the maximum clamping force of 75 kN can be achieved, even at 43 bar.


Clamping heads
Page 422


Accessory overview
Page 478

HYDROK SE size 52 - 100. Technical data

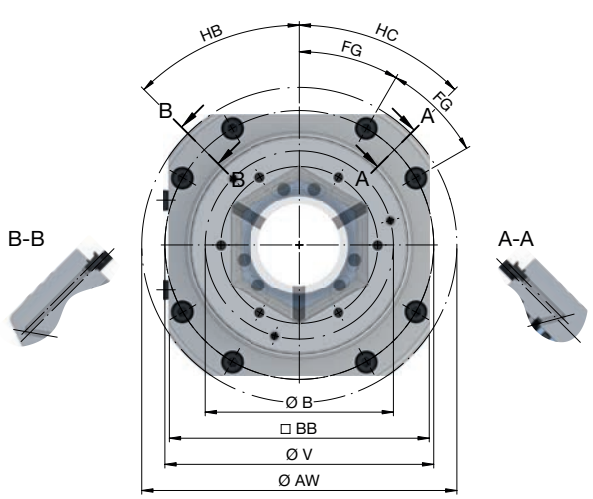

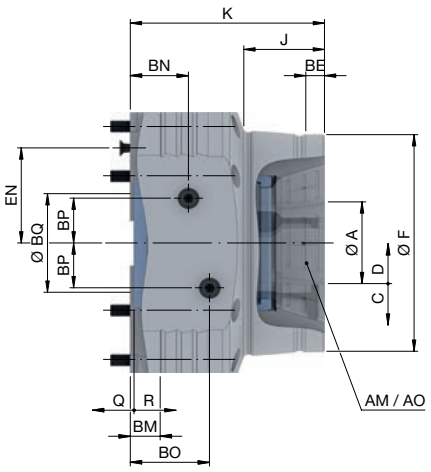

Product line		SE		
Size		**52**	**65**	**100**
Clamping range [mm]	A	3 – 52	3 – 65	15 – 100
Repeatability ≤ [mm]		0,010		
Max. axial drawtube force [pull / push] [kN]		35	45	65
Max. radial clamping force [kN]		91	120	172
Max. actuating pressure [bar]		40		
Release stroke in Ø [mm]	C	0,6		2
RPM n max. [1/min.]		1000		
Reserve stroke in Ø [mm]	D	1		1,5
Reserve stroke axial [mm]	Q	2	2,15	3
Release stroke axial [mm]	R	2,5		5
Location front end-stop	F	Ø 125 f7	Ø 145 f5	Ø 215 f7
Length flange location [mm]	BE	9,5	12,5	15,5
Bolt hole circle end-stop	B	LK Ø 107 [3 x M6]	LK Ø 126 [3 x M6]	LK Ø 180 [3 x M8]
Ø Capacity [mm]	BQ	53	66	108
Height [mm]	J	39,6	54	55
Overall height [mm]	K	120	130	140
Outer variant [mm]	BB	154	174	230
Release	BN	38,1 [1/8"]	38,9 [1/8"]	
Clamping	BO	57,2 [1/8"]	53 [1/8"]	63 [1/8"]
Connecting position [mm]	BP	25	30	
Fluid connection 1 [mm]	EN	55,5	63,6	84,9
Outer Ø [mm]	AW	175 f6	210 f6	270 f6
Bolt hole circle	V	LK Ø 157 [8 x M8]	LK Ø 180 [8 x M8]	LK Ø 240 [8 x M8]
Mounting seat fit length [mm]	BM	20		
Angle position [°]	FG	30		
Clamping via base plate [°]	HB	45		
Release via base plate [°]	HC	45		
Clamping head serrated	AM	TOP 52	TOP 65	TOP 100
Clamping head smooth	AO	TOP 52 G	TOP 65 G	TOP 100 G
Weight [kg]		12	14,5	26
In stock		✔	✔	✔
Material no.		10001415	10001407	10001412

Please note: At adaptation size 52 the adaptation for jaw clamping cannot be used.
Size 100 is also available in lightweight design [14 kg].

					
Clamping heads Page 422	Adaptations I.D. clamping Page 270	Adaptations jaw clamping Page 316	Magnet module Page 332	Clamping head adapter Page 513	Accessory overview Page 478

HYDROK RD size 32. Technical data

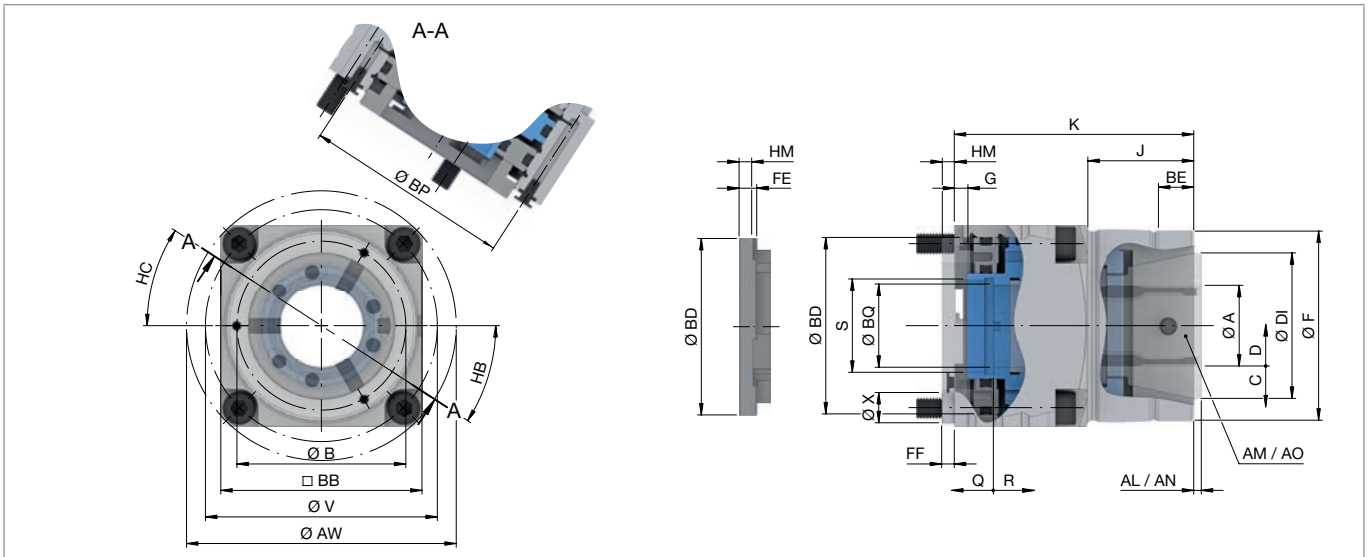

Product line		RD
Size		**32**
Clamping range [mm]	A	3 – 32
Repeatability ≤ [mm]		0,010
Max. axial drawtube force [pull / push] [kN]		25
Max. radial clamping force [kN]		70
Max. actuating pressure [bar]		100
Release stroke in Ø [mm]	C	0,6
RPM n max. [1/min.]		60
Reserve stroke in Ø [mm]	D	1
Reserve stroke axial [mm]	Q	2,5
Release stroke axial [mm]	R	3
Location front end-stop	F	Ø 75 f7
Length flange location [mm]	BE	15
Bolt hole circle end-stop	B	LK Ø 67 [3 x M4]
Ø Capacity [mm]	BQ	33
Height [mm]	J	42
Overall height [mm]	K	95
Outer variant [mm]	BB	79,8
Connecting position [mm]	BP	82
Outer Ø [mm]	AW	106 h7
Bolt hole circle	V	LK Ø 92 [4 x M8]
Clamping via base plate [°]	HB	33
Release via base plate [°]	HC	33
Head Ø [mm]	DI	58
Clamping head serrated	AM	SK 32 BZI
Clamping head protrusion length serrated [mm]	AL	6
Clamping head smooth	AO	SK 32 BZIG
Clamping head protrusion length smooth [mm]	AN	3
Centering height 1 [mm]	FE	7
Centering height 2 [mm]	FF	5
Interface	X	Ø 12 H7
Flange location	BD	Ø 70 H7/g7
Connecting thread inside	S	M38 x 1
Centering length [mm]	G	5
Installation depth [mm]	HM	5 +0,05
Weight [kg]		2,69
In stock		✔
Material no.		10001414

By adapting the tandem cylinder on the HYDROK 32 the maximum clamping force of 70 kN can be reached already at 50 bar.


Clamping heads
Page 430


Accessory overview
Page 478

HYDROK RD size 42 - 100. Technical data

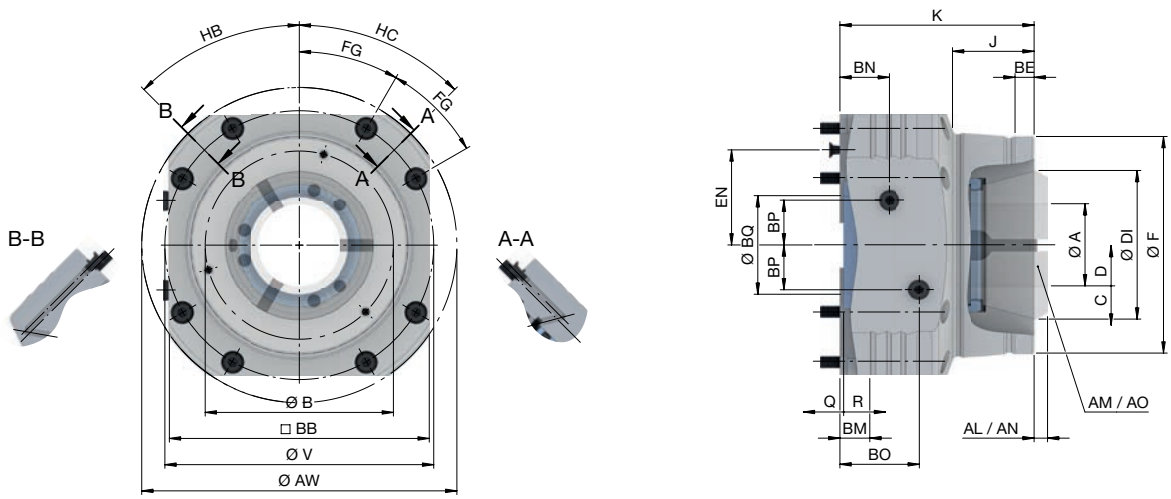

Product line		RD				
Size		**42**	**52**	**65**	**80**	**100**
Clamping range [mm]	A	3 – 42	3 – 52	3 – 65	5 – 80	15 – 100
Repeatability ≤ [mm]		0,010				
Max. axial drawtube force [pull / push] [kN]		35		45	50	65
Max. radial clamping force [kN]		80		105	115	150
Max. actuating pressure [bar]		40				
Release stroke in Ø [mm]	C	0,6				2
RPM n max. [1/min.]		1000				
Reserve stroke in Ø [mm]	D	1				1,5
Reserve stroke axial [mm]	Q	2				3
Release stroke axial [mm]	R	2,5				5
Location front end-stop	F	Ø 125 f7		Ø 145 f5	Ø 160 f7	Ø 215 f7
Length flange location [mm]	BE	7,4		12,5	17,5	15,5
Bolt hole circle end-stop	B	LK Ø 107 [3 x M6]		LK Ø 126 [3 x M6]	LK Ø 139 [3 x M6]	LK Ø 180 [3 x M8]
Ø Capacity [mm]	BQ	47	53	66	81	108
Height [mm]	J	39		54		
Overall height [mm]	K	120		130		140
Outer variant [mm]	BB	154		174	186	229
Release	BN	38,1 [1/8"]		33,15 [1/8"]	33 [1/8"]	38,9 [1/8"]
Clamping	BO	57,2 [1/8"]		53,15 [1/8"]	53,5 [1/8"]	63 [1/8"]
Connecting position [mm]	BP	25	30			
Fluid connection 1 [mm]	EN	55,5		63,6	68,6	84,85
Outer Ø [mm]	AW	175 f6		210 f6	215 f6	270 f6
Bolt hole circle	V	LK Ø 157 [8 x M8]		LK Ø 180 [8 x M8]	LK Ø 194 [8 x M8]	LK Ø 240 [8 x M8]
Mounting seat fit length [mm]	BM	20				
Angle position [°]	FG	30				
Clamping via base plate [°]	HB	45				
Release via base plate [°]	HC	45				
Head Ø [mm]	DI	80		99,5	115	144,5
Clamping head serrated	AM	SK 42 BZI	SK 52 BZI	SK 65 BZI	SK 80 BZI	SK 100 BZ
Clamping head protrusion length serrated [mm]	AL	9	4	9	4	
Clamping head smooth	AO	SK 42 BZIG	SK 52 BZIG	SK 65 BZIG	SK 80 BZIG	SK 100 BZG
Clamping head protrusion length smooth [mm]	AN	4				
Weight [kg]		12		15	17,5	29
In stock		✔	✔	✔	✔	✔
Material no.		10001408	10001409	10001406	10001410	10001411

Please note: At adaptation size 42 and 52 the jaw module cannot be used. Size 100 is also available in Lightweight design [14 kg].

					
Clamping heads Page 430	Adaptations I.D. clamping Page 270	Adaptations jaw clamping Page 316	Magnet module Page 332	Clamping head adapter Page 513	Accessory overview Page 478

InoFlex

Compensating 4-jaw clamping device



InoFlex centric clamping vise

The new InoFlex 4-jaw compensating chucks enable optimal clamping of round, rectangular, and geometrically irregular workpieces or workpieces that are susceptible to deformation in milling operations.

Thanks to the 4-jaw workholding technology, with which the jaw pairs enclose the center in a manner that provides compensation, the workpiece is always clamped centered – no matter how asymmetric it is. Compensation is achieved by connecting the sliding carriages located in the circle by means of levers.

This ensures substantially safer and more stable clamping than with conventional 3-jaw chucks or non-compensating concentric clamping vises. You can therefore switch between workpieces with different geometries, without the need for additional clamping devices.

They are suitable for clamping of blanks and finished parts; they compensate in the case of blanks and provide for excellent repeatability of finished parts.

Key advantages

- 4-sided clamping [2x2] with compensation of the opposing jaws
- Ideal for clamping workpieces that are susceptible to deformation
- Large stroke and compensating stroke for each jaw
- For I.D. and O.D. clamping
- Flexible implementation [4-jaw and 2-jaw clamping]
- High repeatability
- Flat and compact size
- Easy handling

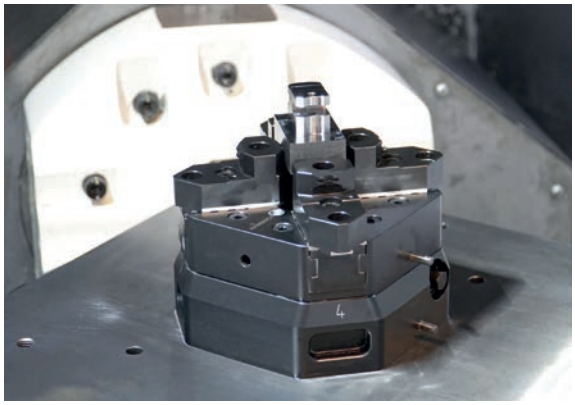

InoFlex in use

InoFlex centric clamping vise

InoFlex VF [centric clamping vise] in detail

Designation	
1 Adjustable top jaw with wedge profile toothing 2 Thread for transport lug 3 Grease nipple, for each jaw guide for optimal lubrication 4 Stable base body 5 Manual actuation via socket wrench 6 Groove for fastening on machine table 7 Master jaw with wedge profile toothing for use with different top jaws 8 Mounting thread for positive stop jaws	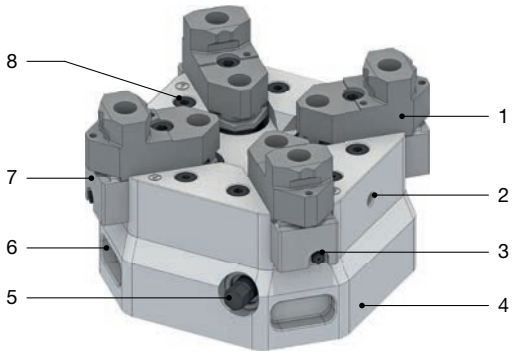

Applications

Technical suitability	Vise	3-jaw chuck	InoFlex
Clamping of asymmetrical workpieces	✘	✘	✔
Clamping of round workpieces	✘	✔	✔
Clamping of cubic workpieces	✔	✘	✔
Clamping workpieces that are susceptible to deformation	✘	✘	✔
I.D. clamping	✘	✔	✔
Centric compensating clamping	✘	✘	✔

✔ = suitable ✘ = unsuitable

InoFlex VF centric clamping vise. Technical data

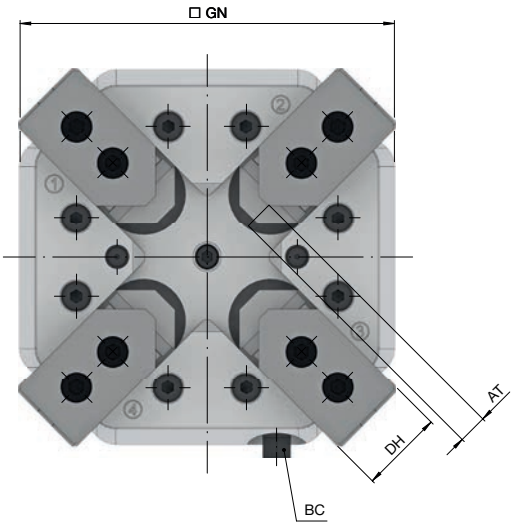

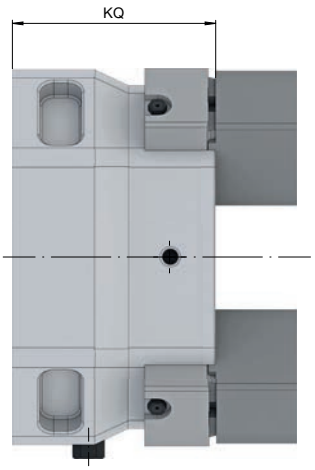

Size		160	260
Variant		VF	
Repeatability ≤ [mm]		0,020	
Max. radial clamping force [kN]		40	70
Max. actuating torque [Nm]	BC	100	180
RPM n max. [1/min.]		400	
Stroke per jaw [mm]	AT	12,6	14
Compensating stroke for each jaw [mm]		11,6	13,0
Height without jaws [mm]	KQ	88,0	125,5
Jaw width [mm]	DH	36	48
Outer dimension [mm]	GN	162	235
Weight [kg]		13	44,5
In stock		✔	✔
Material no.		10015010	10015012

The run-out is based on soft, milled top jaws.



Jaws

Page 467



Accessory overview

Page 478

Scope of delivery

- Centric clamping vise
- Top jaws, soft
- Grease cartridge
- Actuation wrench

InoFlex centric clamping vise

Clamping possibilities

	Chuck O.D. clamping	Chuck I.D. clamping	Concentric clamping
			
Symbol			
Description	Clamping with four identical jaws. The workpiece is clamped from the outside.	Clamping with four identical jaws. The workpiece is clamped from the inside.	Clamping with two movable jaws. Two jaw seats are not equipped.
Application	Machining with centric zero point. Machining on the top side and between the jaws.	Machining with centric zero point. Easy access from five sides i.e. from the shell surface.	Classic concentric clamping.
Workpiece examples	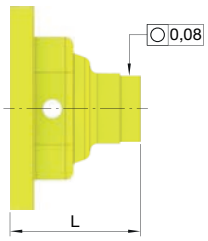	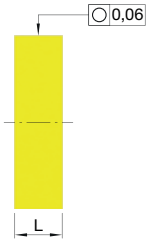	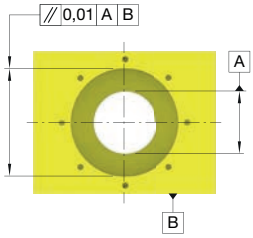
Advantages	■ Centric zero point ■ Powerful, four-sided clamping ■ Enclosed clamping	■ Centric zero point ■ Powerful, four-sided clamping ■ Minimal interference contour	■ Workpiece machining on both sides in one clamping set-up
Jaws	 VP10, VP12  VR10, VR12  VCB016, VCB026  VCB018, VCB028  VCG016, VCG026	 VP10, VP12  VR10, VR12  VCB016, VCB026  VCB018, VCB028  VCG016, VCG026	 VCB016, VCB026  VCB018, VCB028  VCG016, VCG026

Vise clamping	Centric vise clamping	Double vise clamping
		
		
Clamping with one fixed and one movable jaw. Two jaw seats are not equipped.	Clamping with one fixed and three movable jaws.	Clamping with two fixed jaws and two movable jaws.
Classic vise clamping.	Machining with one zero edge and one centric center axis.	Machining with end-stop on two zero edges.
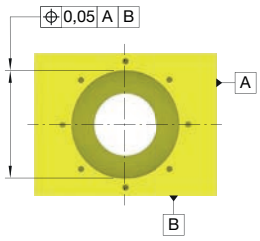	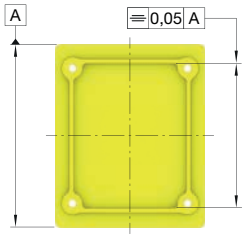	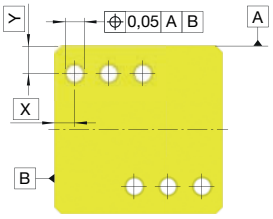
■ Workpiece machining on both sides in one clamping set-up	■ Vise clamping and centering in a center axis ■ Powerful, four-sided clamping ■ Enclosed clamping	■ Clamping in the corner ■ Powerful, four-sided clamping ■ Enclosed clamping
 VCF016, VCF026  VCB016, VCB026  VCB018, VCB028  VCG016, VCG026	 VCF016, VCF026  VCB016, VCB026  VCB018, VCB028  VCG016, VCG026	 VCF016, VCF026  VCB016, VCB026  VCB018, VCB028  VCG016, VCG026

Overview

Find what's important fast

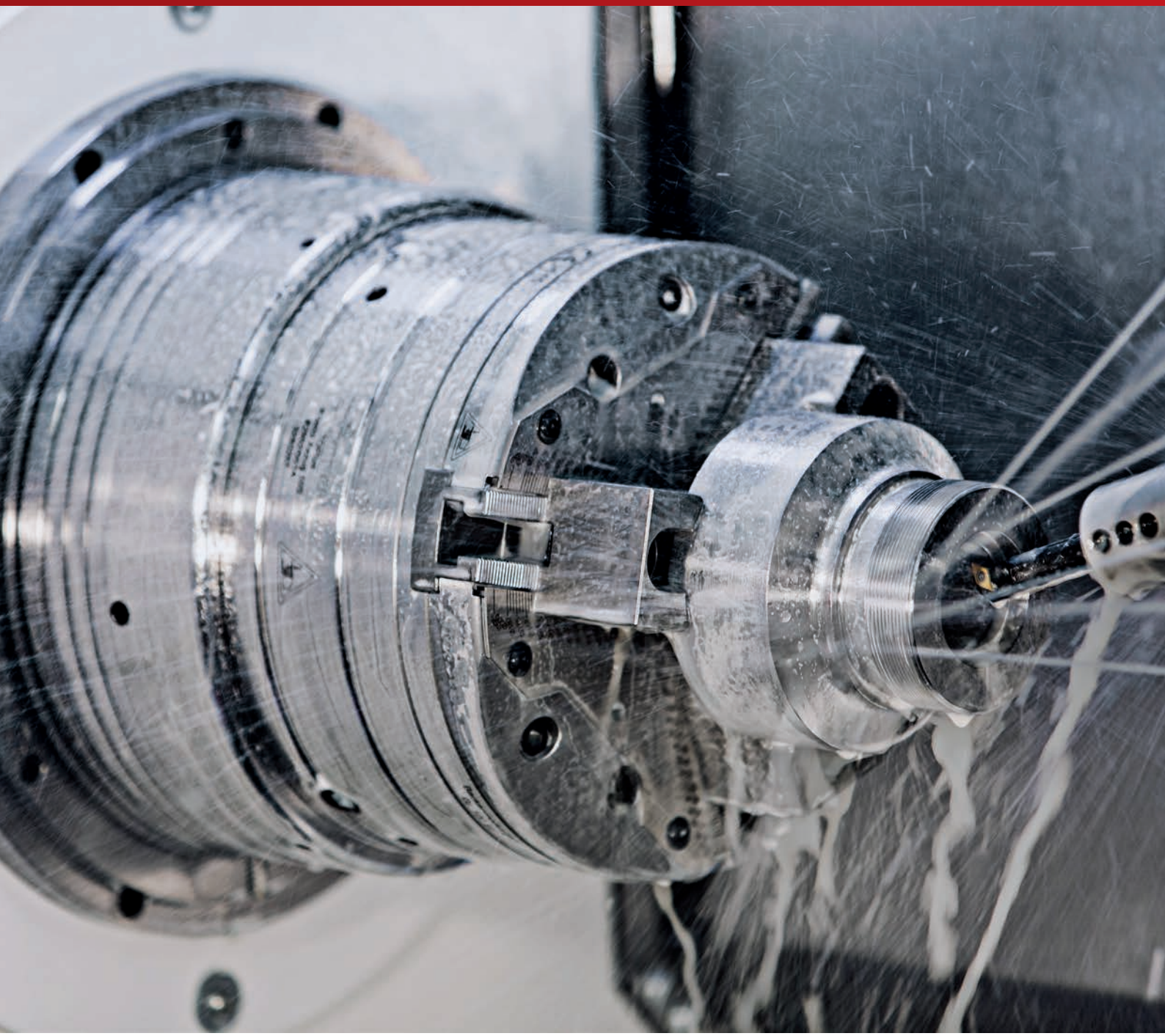



Adaptation clamping devices


MANDO Adapt [mandrel adaptation] 270


Jaw modules 316


Face driver / morse taper adaptation 324


Magnet module 332

Adaptation clamping devices

Adaptation clamping devices at a glance

	MANDO Adapt	Jaw module	Face driver adaptation
	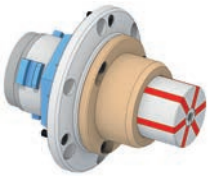		
Description	Adaptation for I.D. clamping	Adaptation for jaw clamping [O.D. clamping]	Adaptation for clamping between centers
Sizes	XXS, XS, S, 0, 1, 2, 3, 4, 5, 6, 7	145, 215	42, 52, 65, 80, 100
Clamping range of all sizes [mm]	8 – 190	15 – 209	–
Variant	SE [hexagonal], RD [round]	SE [hexagonal], RD [round]	SE [hexagonal], RD [round]
Advantages	■ Extremely fast conversion without detachment of the basic clamping device [1 – 2 min.] ■ Large clamping range and vibration dampening due to vulcanized clamping elements ■ Standard segmented clamping bushings and workpiece end-stops for machining to size available	■ Jaw clamping in the HAINBUCH chuck or stationary chuck ■ Extremely fast conversion without detachment of the base clamping device [2 min.] ■ Self-centering on the basic clamping device ■ Enlarges clamping range of the basic clamping device ■ Deadlength clamping without pull-back effect ■ Optimal lubrication and resistant to contamination thanks to the lubricating system	■ Spring-loaded center ■ Hard metal face driver ■ Assembly in 1 minute without alignment
	Page 270	Page 316	Page 324

Morse taper adaptation	Magnet module
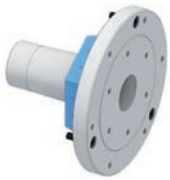	
Adaptation to the MK4 reception	Adaptation for magnetic clamping
42, 52, 65, 80, 100	52, 65, 80, 100
–	–
SE [hexagonal], RD [round]	SE [hexagonal], RD [round]
■ Adaptation possibility via morse taper ■ Assembly in 1 minute without alignment ■ Self-centering of the adaptation in the chuck without alignment	■ End face axial clamping via neodymium magnet ■ High face-run change-over accuracy ■ High holding power of 140 N/cm² ■ Assembly in 30 seconds without alignment ■ Low maintenance because it is resistant to contamination
Page 324	Page 332

MANDO Adapt

Mandrel-in-clamping-device

HAINBUCH SYSTEM



MANDO Adapt [mandrel adaptation]

Change-over from O.D. clamping to perfect I.D. clamping, without changing the clamping device? No problem with MANDO Adapt. Place the mandrel in the mounted clamping device, tighten three screws and lock the mandrel in the clamping device. In this process the mandrel engages in the coupling of the clamping device via a sophisticated mechanism, where otherwise the clamping head engages. MANDO Adapt is attractive with extreme rigidity and precision. For rotating products, run-out of 0.005 mm between chuck taper and mandrel taper can be achieved. For stationary clamping devices repeatability of 0.003 mm is possible. And best of all, this can be accomplished without alignment.

Ingeniously simple and effective, genuine HAINBUCH!

Key advantages

- Extremely fast conversion without detachment of the basic clamping device [1 – 2 min.]
- Large clamping range and vibration dampening due to vulcanized clamping elements
- Standard segmented clamping bushings and workpiece end-stops for machining to size available

MANDO Adapt at a glance

	MANDO Adapt T211	MANDO Adapt T212	MANDO Adapt T812
			
Description	Mandrel-in-clamping-device, with draw bolt / pull-back	Mandrel-in-clamping-device, without draw bolt / pull-back	Mandrel-in-clamping-device, without draw bolt / deadlength
Sizes	0, 1, 2, 3, 4	XXS, XS, S, 0, 1, 2, 3, 4, 5, 6, 7	XS, S, 0, 1, 2, 3, 4
Clamping range of all sizes [mm]	20 – 120	8 – 190	13 – 100
Variant	SE [hexagonal], RD [round]	SE [hexagonal], RD [round]	RD [round]
Actuation	Draw	Draw	Pressure
Advantages	■ Workpiece stabilization through axial draw force applied against the workpiece end-stop ■ Less expensive segmented clamping bushings and end-stops compared to MANDO T212	■ Workpiece stabilization through axial draw force applied against the workpiece end-stop ■ Clamping without draw bolt, consequently ideal for blind bores	■ Radial clamping, without pull-back – ideal for pick-off the main spindle ■ Clamping without draw bolt, consequently ideal for blind bores

MANDO Adapt T211 SE in detail

Designation	
1 Vulcanized segmented clamping bushing made of case-hardened steel [60 HRC] 2 End-stop 3 Draw bolt 4 CENTREX system for µm-precise use without adjustment 5 Coupling: Mandrel locks automatically when the draw bolt is screwed in 6 Mounting screws for quick change-over 7 Integrated, and thus optimal forced release of the clamping 8 Torsional safety lock of segmented clamping bushing	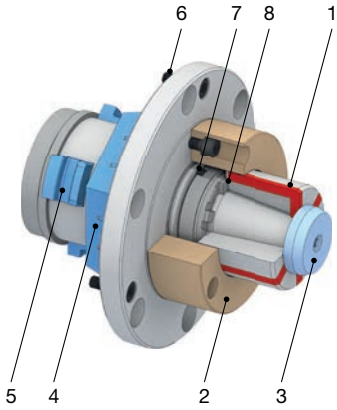

MANDO Adapt T212 SE in detail

Designation	
1 Vulcanized segmented clamping bushing made of case-hardened steel [60 HRC] 2 High rigidity due to one-piece crown coupling with integrated entrainment of the segmented clamping bushing 3 Coupling ring for fast changing of the segmented clamping bushing 4 CENTREX system for µm-precise use without adjustment 5 Coupling: Mandrel is locked via separate key 6 Mounting screws for quick change-over 7 End-stop	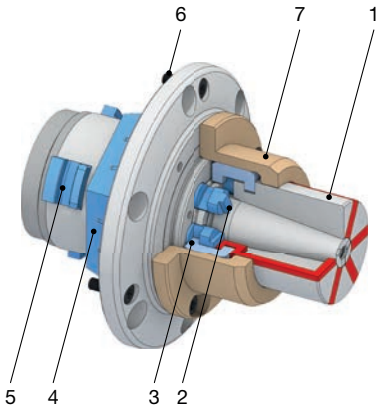

MANDO Adapt T812 RD in detail

Designation	
1 Vulcanized segmented clamping bushing made of case-hardened steel [60 HRC] 2 End-stop 3 Coupling ring for fast changing of the segmented clamping bushing 4 Bayonet coupling 5 Mounting screws for quick change-over 6 CENTREX system for µm-precise use without adjustment	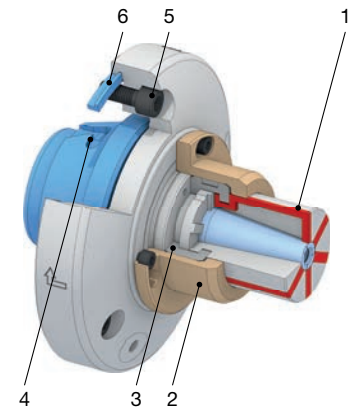

MANDO Adapt T211 SE. Order overview

Size	Clamping range [mm]	Adaptation size	Material no.	In stock	Suitable for: TOPlus mini pull-back Page 26	TOPlus premium pull-back Page 46	TOPlus combi pull-back Page 58	TOPlus modular Page 58	TOROK SE Page 122	HYDROK SE Page 252	MANOK plus SE Page 244
0	20 – 28	52	10000999	-	✔	✔					
			10001574	✔			✔	✔	✔	✔	✔
		65	10001002	✔	✔	✔					
			10001577	✔			✔	✔	✔	✔	✔
		80	10017061	✔	✔	✔					
		100	10001007	✔							
			10001582	✔			✔	✔	✔	✔	✔
1	26 – 38	52	10001000	-	✔	✔					
			10001575	✔			✔	✔	✔	✔	✔
		65	10001003	✔	✔	✔					
			10001578	✔			✔	✔	✔	✔	✔
		80	10017067	✔	✔	✔					
		100	10001008	✔							
			10001583	✔			✔	✔	✔	✔	✔
2	36 – 54	52	10001001	-	✔	✔					
			10001576	✔			✔	✔	✔	✔	✔
		65	10001004	✔	✔	✔					
			10001579	✔			✔	✔	✔	✔	✔
		80	10017068	✔	✔	✔					
		100	10001009	✔							
			10001584	✔			✔	✔	✔	✔	✔
3	50 – 80	65	10001005	✔	✔	✔					
			10001580	✔			✔	✔	✔	✔	✔
		80	10017069	✔	✔	✔					
		100	10001010	✔							
			10001585	✔			✔	✔	✔	✔	✔
4	69 – 120	65	10001006	✔	✔	✔					
			10001581	✔			✔	✔	✔	✔	✔
		80	10017070	✔	✔	✔					
		100	10001011	✔							
			10001586	✔			✔	✔	✔	✔	✔

Detailed technical data follows.

Scope of delivery

- Adaptation mandrel
- Draw bolt

MANDO Adapt T211 SE. Technical data

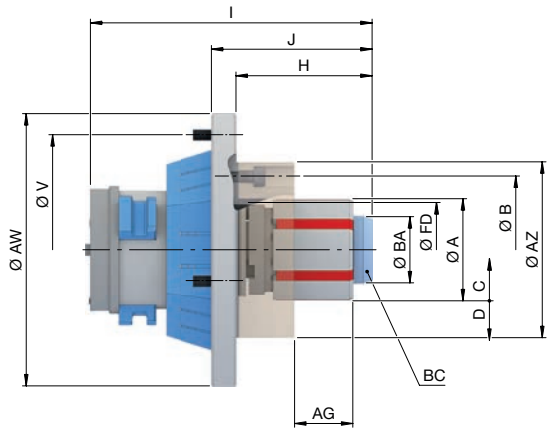

Size		0						
Adaptation size		**52**		**65**		**80**	**100**	
Suitable for		TOPlus mini / premium	all except TOPlus mini / premium	TOPlus mini / premium	all except TOPlus mini / premium	TOPlus mini / premium	TOPlus mini / premium	all except TOPlus mini / premium
Clamping range [mm]	A	20 – 28						
Run-out ≤ [mm]		0,010						
Max. radial clamping force [kN]		42						
Max. axial drawtube force [pull / push] [kN]		10						
Max. clamping length [mm]	AG	22						
Release stroke in Ø [mm]	C	0,4						
Reserve stroke in Ø [mm]	D	0,3						
Range / recommended workpiece tolerance [mm]		± 0,25						
RPM n max. [1/min.]		7000		6000		5500	5000	
Max. actuating torque [Nm]	BC	10						
Draw bolt Ø [mm]	BA	19						
Reception workpiece end-stop	FD	Ø 32 f7						
End-stop outer Ø [mm]	AZ	65						
Bolt hole circle end-stop	B	LK Ø 50 [3 x M6]						
Length [mm]	H	42,3		42				
Total length [mm]	I	109		119			129	
Height [mm]	J	55						
Bolt hole circle	V	LK Ø 105 [3 x M8]	LK Ø 107 [3 x M6]	LK Ø 112 [3 x M8]	LK Ø 126 [3 x M6]	LK Ø 130 [3 x M8]	LK Ø 160 [3 x M8]	LK Ø 180 [3 x M8]
Outer Ø [mm]	AW	119	125	129	144	150	183	215
Weight [kg]		2,2		3,3	3,4	5	8,1	9
In stock		-	✔	✔	✔	✔	✔	✔
Material no.		10000999	10001574	10001002	10001577	10017061	10001007	10001582

Mounting precision for rotating clamping devices: Run-out ≤ 0.005 mm between chuck and adaptation clamping device. Run-out errors on the chuck must also be taken into consideration. Mounting repeatability for stationary clamping devices: ≤ 0.003 mm on the adaptation clamping device.


Segmented clamping bushings
Page 448


Accessory overview
Page 478

MANDO Adapt T211 SE. Technical data

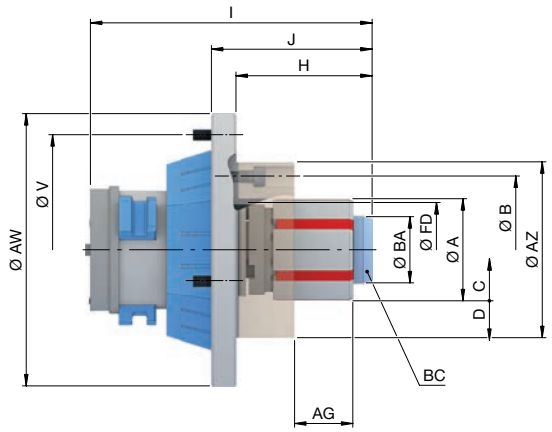

Size		**1**						
Adaptation size		**52**		**65**		**80**	**100**	
Suitable for		TOPlus mini / premium	all except TOPlus mini / premium	TOPlus mini / premium	all except TOPlus mini / premium	TOPlus mini / premium	TOPlus mini / premium	all except TOPlus mini / premium
Clamping range [mm]	A	26 – 38						
Run-out ≤ [mm]		0,010						
Max. radial clamping force [kN]		42						
Max. axial drawtube force [pull / push] [kN]		10						
Max. clamping length [mm]	AG	26						
Release stroke in Ø [mm]	C	0,4						
Reserve stroke in Ø [mm]	D	0,3						
Range / recommended workpiece tolerance [mm]		± 0,25						
RPM n max. [1/min.]		7000		6000		5500	5000	
Max. actuating torque [Nm]	BC	20						
Draw bolt Ø [mm]	BA	25						
Reception workpiece end-stop	FD	Ø 41 f7						
End-stop outer Ø [mm]	AZ	69						
Bolt hole circle end-stop	B	LK Ø 55 [3 x M6]						
Length [mm]	H	52					51,5	
Total length [mm]	I	119		129			139	
Height [mm]	J	65						
Bolt hole circle	V	LK Ø 105 [3 x M8]	LK Ø 107 [3 x M6]	LK Ø 112 [3 x M8]	LK Ø 126 [3 x M6]	LK Ø 130 [3 x M8]	LK Ø 160 [3 x M8]	LK Ø 180 [3 x M8]
Outer Ø [mm]	AW	119	125	129	144	150	183	215
Weight [kg]		2,3		3,4	3,5	5	8,3	9,2
In stock		-	✔	✔	✔	✔	✔	✔
Material no.		10001000	10001575	10001003	10001578	10017067	10001008	10001583

Mounting precision for rotating clamping devices: Run-out ≤ 0.005 mm between chuck and adaptation clamping device. Run-out errors on the chuck must also be taken into consideration. Mounting repeatability for stationary clamping devices: ≤ 0.003 mm on the adaptation clamping device.


Segmented clamping bushings
Page 448


Accessory overview
Page 478

MANDO Adapt T211 SE. Technical data

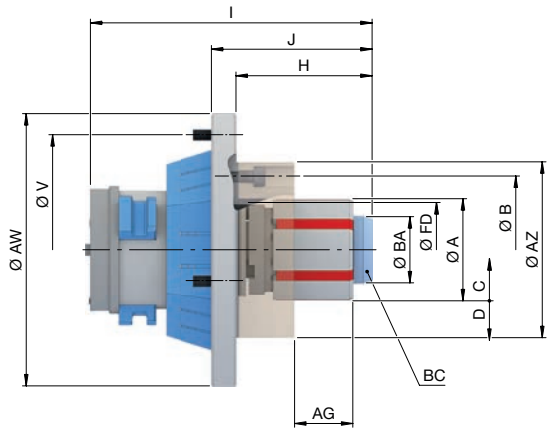

Size		2						
Adaptation size		**52**		**65**		**80**	**100**	
Suitable for		TOPlus mini / premium	all except TOPlus mini / premium	TOPlus mini / premium	all except TOPlus mini / premium	TOPlus mini / premium	TOPlus mini / premium	all except TOPlus mini / premium
Clamping range [mm]	A	36 – 54						
Run-out ≤ [mm]		0,010						
Max. radial clamping force [kN]		85						
Max. axial drawtube force [pull / push] [kN]		20						
Max. clamping length [mm]	AG	43						
Release stroke in Ø [mm]	C	0,4		0,3		0,5	0,3	
Reserve stroke in Ø [mm]	D	0,3		0,5		0,3	0,5	
Range / recommended workpiece tolerance [mm]		± 0,25						
RPM n max. [1/min.]		7000		6000		5500	5000	
Max. actuating torque [Nm]	BC	25						
Draw bolt Ø [mm]	BA	35						
Reception workpiece end-stop	FD	Ø 50 f7						
End-stop outer Ø [mm]	AZ	93						
Bolt hole circle end-stop	B	LK Ø 78 [3 x M6]						
Length [mm]	H	72,3		72			71,5	
Total length [mm]	I	139		149			159	
Height [mm]	J	85						
Bolt hole circle	V	LK Ø 105 [3 x M8]	LK Ø 107 [3 x M6]	LK Ø 112 [3 x M8]	LK Ø 126 [3 x M6]	LK Ø 130 [3 x M8]	LK Ø 160 [3 x M8]	LK Ø 180 [3 x M8]
Outer Ø [mm]	AW	119	125	129	144	150	183	215
Weight [kg]		2,6		3,7	3,8	5	8,6	9,5
In stock		-	✔	✔	✔	✔	✔	✔
Material no.		10001001	10001576	10001004	10001579	10017068	10001009	10001584

Mounting precision for rotating clamping devices: Run-out ≤ 0.005 mm between chuck and adaptation clamping device. Run-out errors on the chuck must also be taken into consideration. Mounting repeatability for stationary clamping devices: ≤ 0.003 mm on the adaptation clamping device.


Segmented clamping bushings
Page 448


Accessory overview
Page 478

MANDO Adapt T211 SE. Technical data

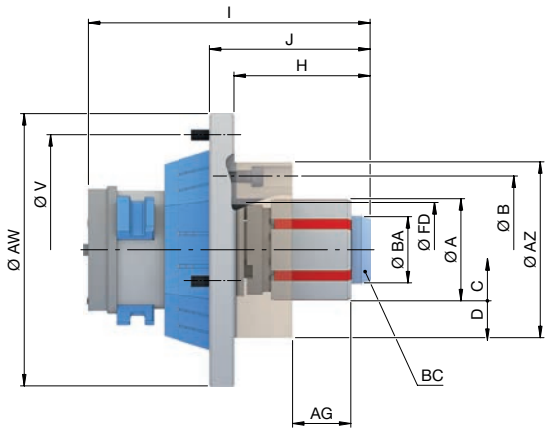

Size		**3**				
Adaptation size		**65**		**80**	**100**	
Suitable for		TOPlus mini / premium	all except TOPlus mini / premium	TOPlus mini / premium	TOPlus mini / premium	all except TOPlus mini / premium
Clamping range [mm]	A	50 – 80				
Run-out ≤ [mm]		0,010				
Max. radial clamping force [kN]		105				
Max. axial drawtube force [pull / push] [kN]		25				
Max. clamping length [mm]	AG	49				
Release stroke in Ø [mm]	C	0,5				
Reserve stroke in Ø [mm]	D	0,4				
Range / recommended workpiece tolerance [mm]		± 0,35				
RPM n max. [1/min.]		6000		5500	5000	
Max. actuating torque [Nm]	BC	55				
Draw bolt Ø [mm]	BA	49				
Reception workpiece end-stop	FD	Ø 65 f7				
End-stop outer Ø [mm]	AZ	96				
Bolt hole circle end-stop	B	LK Ø 80 [3 x M6]				
Length [mm]	H	82			81,5	
Total length [mm]	I	159			169	
Height [mm]	J	95				
Bolt hole circle	V	LK Ø 112 [3 x M8]	LK Ø 126 [3 x M6]	LK Ø 130 [3 x M8]	LK Ø 160 [3 x M8]	LK Ø 180 [3 x M8]
Outer Ø [mm]	AW	129	144	150	183	215
Weight [kg]		4,4	4,5	6	9,3	10,2
In stock		✔	✔	✔	✔	✔
Material no.		10001005	10001580	10017069	10001010	10001585

Mounting precision for rotating clamping devices: Run-out ≤ 0.005 mm between chuck and adaptation clamping device. Run-out errors on the chuck must also be taken into consideration. Mounting repeatability for stationary clamping devices: ≤ 0.003 mm on the adaptation clamping device.


Segmented clamping bushings
Page 448


Accessory overview
Page 478

MANDO Adapt T211 SE. Technical data

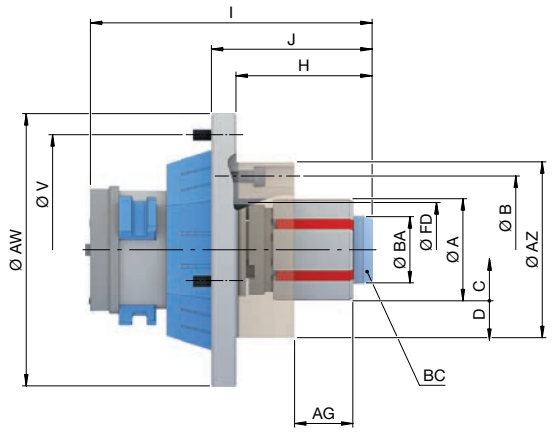

Size		4				
Adaptation size		**65**		**80**	**100**	
Suitable for		TOPlus mini / premium	all except TOPlus mini / premium	TOPlus mini / premium	TOPlus mini / premium	all except TOPlus mini / premium
Clamping range [mm]	A	69 – 120				
Run-out ≤ [mm]		0,010				
Max. radial clamping force [kN]		150				
Max. axial drawtube force [pull / push] [kN]		35				
Max. clamping length [mm]	AG	59				
Release stroke in Ø [mm]	C	0,5				
Reserve stroke in Ø [mm]	D	0,6			0,5	
Range / recommended workpiece tolerance [mm]		± 0,4				
RPM n max. [1/min.]		6000		5500	5000	
Max. actuating torque [Nm]	BC	65				
Draw bolt Ø [mm]	BA	68				
Reception workpiece end-stop	FD	Ø 78 f7				
End-stop outer Ø [mm]	AZ	120				
Bolt hole circle end-stop	B	LK Ø 90 [3 x M6]				
Length [mm]	H	97			96,5	
Total length [mm]	I	174			184	
Height [mm]	J	110				
Bolt hole circle	V	LK Ø 112 [3 x M8]	LK Ø 126 [3 x M6]	LK Ø 130 [3 x M8]	LK Ø 160 [3 x M8]	LK Ø 180 [3 x M8]
Outer Ø [mm]	AW	129	144	150	183	215
Weight [kg]		5,4	5,5	7	10,2	11,1
In stock		✔	✔	✔	✔	✔
Material no.		10001006	10001581	10017070	10001011	10001586

Mounting precision for rotating clamping devices: Run-out ≤ 0.005 mm between chuck and adaptation clamping device. Run-out errors on the chuck must also be taken into consideration. Mounting repeatability for stationary clamping devices: ≤ 0.003 mm on the adaptation clamping device.

For size 4, clamping range 101 – 120 mm, a max. speed of 4200 RPM applies.


Segmented clamping bushings
Page 448


Accessory overview
Page 478

MANDO Adapt T212 SE. Order overview

Size	Clamping range [mm]	Adaptation size	Material no.	In stock	Suitable for: TOPlus mini pull-back Page 26	TOPlus premium pull-back Page 46	TOPlus combi pull-back Page 58	TOPlus modular Page 58	TOROK SE Page 122	HYDROK SE Page 252	MANOK plus SE Page 244
XXS	8 – 13	52	10001012	-	✔	✔					
			10001648	-			✔	✔	✔	✔	✔
		65	10001018	✔	✔	✔					
			10001656	✔			✔	✔	✔	✔	✔
		80	10017071	-	✔	✔					
		100	10001026	-							
			10001664	-			✔	✔	✔	✔	✔
XS	13 – 19	52	10001013	-	✔	✔					
			10001647	✔			✔	✔	✔	✔	✔
		65	10001019	✔	✔	✔					
			10001655	✔			✔	✔	✔	✔	✔
		80	10017072	✔	✔	✔					
		100	10001027	✔							
			10001663	✔			✔	✔	✔	✔	✔
S	16 – 21	52	10001014	-	✔	✔					
			10001646	✔			✔	✔	✔	✔	✔
		65	10001020	✔	✔	✔					
			10001654	✔			✔	✔	✔	✔	✔
		80	10017073	✔	✔	✔					
		100	10001028	✔							
			10001662	✔			✔	✔	✔	✔	✔
0	20 – 28	52	10001015	-	✔	✔					
			10001645	-			✔	✔	✔	✔	✔
		65	10001021	✔	✔	✔					
			10001653	✔			✔	✔	✔	✔	✔
		80	10017074	✔	✔	✔					
		100	10001029	✔							
			10001661	✔			✔	✔	✔	✔	✔

Detailed technical data follows.

MANDO Adapt T212 SE. Order overview

Size	Clamping range [mm]	Adaptation size	Material no.	In stock	Suitable for: TOPlus mini pull-back Page 26	TOPlus premium pull-back Page 46	TOPlus combi pull-back Page 58	TOPlus modular Page 58	TOROK SE Page 122	HYDROK SE Page 252	MANOK plus SE Page 244
1	26 – 38	52	10001016	-	✔	✔					
			10001644	✔			✔	✔	✔	✔	✔
		65	10001022	✔	✔	✔					
			10001652	✔			✔	✔	✔	✔	✔
		80	10017075	✔	✔	✔					
		100	10001030	✔							
			10001660	✔			✔	✔	✔	✔	✔
2	36 – 54	52	10001017	-	✔	✔					
			10001643	✔			✔	✔	✔	✔	✔
		65	10001023	✔	✔	✔					
			10001651	✔			✔	✔	✔	✔	✔
		80	10017076	✔	✔	✔					
		100	10001031	✔	✔	✔					
			10001659	✔			✔	✔	✔	✔	✔
3	50 – 80	65	10001024	✔	✔	✔					
			10001650	✔			✔	✔	✔	✔	✔
		80	10017077	✔	✔	✔					
		100	10001032	✔							
			10001658	✔			✔	✔	✔	✔	✔
4	69 – 100	65	10001025	✔	✔	✔					
			10001649	✔			✔	✔	✔	✔	✔
		80	10017078	✔	✔	✔					
		100	10001033	✔							
			10001657	✔			✔	✔	✔	✔	✔

Detailed technical data follows.

Scope of delivery

- Adaptation mandrel
- Coupling ring
- Mounting aid depending on size

MANDO Adapt T212 SE. Technical data

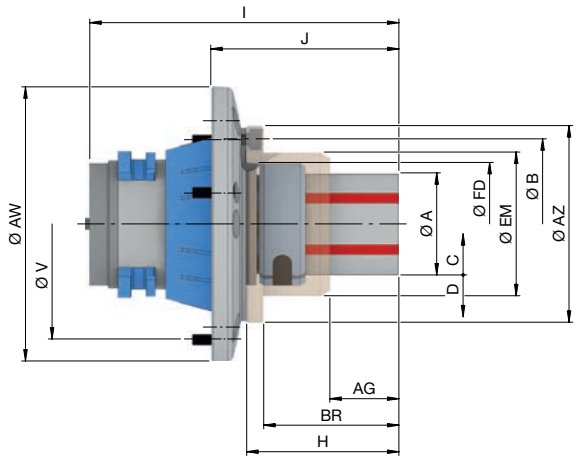

Size		XXS						
Adaptation size		**52**		**65**		**80**	**100**	
Suitable for		TOPlus mini / premium	all except TOPlus mini / premium	TOPlus mini / premium	all except TOPlus mini / premium	TOPlus mini / premium	TOPlus mini / premium	all except TOPlus mini / premium
Clamping range [mm]	A	8 – 13						
Run-out ≤ [mm]		0,020						
Release stroke in Ø [mm]	C	0,2						
Reserve stroke in Ø [mm]	D	0,2						
Range / recommended workpiece tolerance [mm]		± 0,15						
Max. clamping length [mm]	AG	12,9						
Max. axial drawtube force [pull / push] [kN]		10						
Max. radial clamping force [kN]		42						
RPM n max. [1/min.]		7000		6000		5500	5000	
Reception workpiece end-stop	FD	Ø 34 f7						
Bolt hole circle end-stop	B	LK Ø 53 [3 x M5]						
End-stop outer Ø [mm]	AZ	65						
Depth [mm]	BR	37,5						
End-stop outer Ø 2 [mm]	EM	41						
Length [mm]	H	45,5						
Total length [mm]	I	124,3		127,5		124,5	139	
Height [mm]	J	71		64,5		61	65,5	
Bolt hole circle	V	LK Ø 105 [3 x M8]	LK Ø 107 [3 x M6]	LK Ø 112 [3 x M8]	LK Ø 126 [3 x M6]	LK Ø 130 [3 x M8]	LK Ø 160 [3 x M8]	LK Ø 180 [3 x M8]
Outer Ø [mm]	AW	119	125	129	145	150	183	215
Weight [kg]		3		3,6	3,8	5	9	10
In stock		-	-	✔	✔	-	-	-
Material no.		10001012	10001648	10001018	10001656	10017071	10001026	10001664

Please note: The maximum clamping length [AG] varies from 6 to 12.9 mm depending on the clamping diameter.

Mounting precision for rotating clamping devices: Run-out ≤ 0.005 mm between chuck and adaptation clamping device. Run-out errors on the chuck must also be taken into consideration. Mounting repeatability for stationary clamping devices: ≤ 0.003 mm on the adaptation clamping device.


Segmented clamping bushings
Page 448


Accessory overview
Page 478

MANDO Adapt T212 SE. Technical data

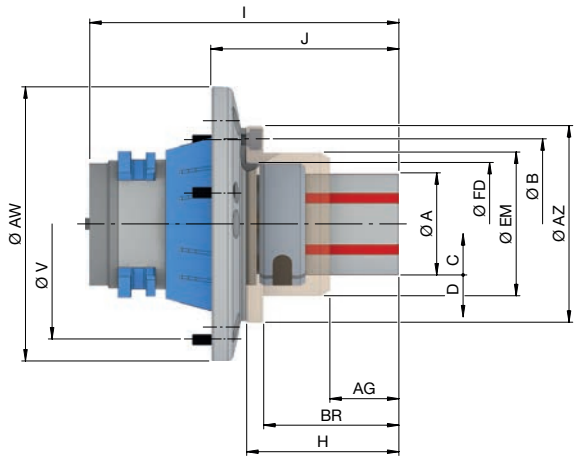

Size		XS						
Adaptation size		**52**		**65**		**80**	**100**	
Suitable for		TOPlus mini / premium	all except TOPlus mini / premium	TOPlus mini / premium	all except TOPlus mini / premium	TOPlus mini / premium	TOPlus mini / premium	all except TOPlus mini / premium
Clamping range [mm]	A	13 – 19						
Run-out ≤ [mm]		0,020						
Release stroke in Ø [mm]	C	0,4					0,5	
Reserve stroke in Ø [mm]	D	0,3						
Range / recommended workpiece tolerance [mm]		± 0,25						
Max. clamping length [mm]	AG	14						
Max. axial drawtube force [pull / push] [kN]		10						
Max. radial clamping force [kN]		42						
RPM n max. [1/min.]		7000		6000		5500	5000	
Reception workpiece end-stop	FD	Ø 36 f7						
Bolt hole circle end-stop	B	LK Ø 53 [3 x M5]						
End-stop outer Ø [mm]	AZ	65						
Depth [mm]	BR	37,5						
End-stop outer Ø 2 [mm]	EM	42						
Length [mm]	H	45,5						
Total length [mm]	I	125		128		125	139,5	
Height [mm]	J	71		64,5		61	65,5	
Bolt hole circle	V	LK Ø 105 [3 x M8]	LK Ø 107 [3 x M6]	LK Ø 112 [3 x M8]	LK Ø 126 [3 x M6]	LK Ø 130 [3 x M8]	LK Ø 160 [3 x M8]	LK Ø 180 [3 x M6]
Outer Ø [mm]	AW	119	125	129	145	150	183	215
Weight [kg]		3		3,6	3,8	5	9	10
In stock		-	✔	✔	✔	✔	✔	✔
Material no.		10001013	10001647	10001019	10001655	10017072	10001027	10001663

Mounting precision for rotating clamping devices: Run-out ≤ 0.005 mm between chuck and adaptation clamping device. Run-out errors on the chuck must also be taken into consideration. Mounting repeatability for stationary clamping devices: ≤ 0.003 mm on the adaptation clamping device.


Segmented clamping bushings
Page 448


Accessory overview
Page 478

MANDO Adapt T212 SE. Technical data

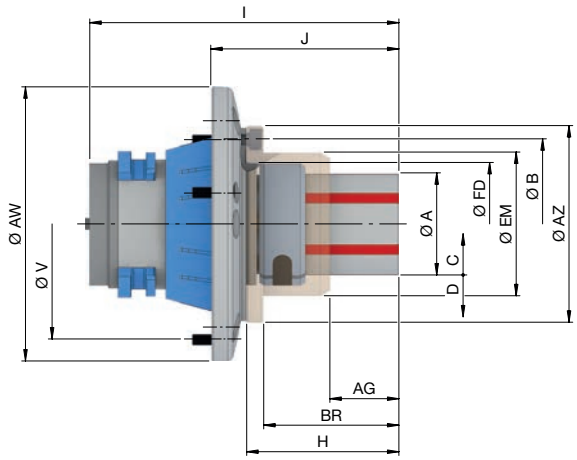

Size		**S**						
Adaptation size		**52**		**65**		**80**	**100**	
Suitable for		TOPlus mini / premium	all except TOPlus mini / premium	TOPlus mini / premium	all except TOPlus mini / premium	TOPlus mini / premium	TOPlus mini / premium	all except TOPlus mini / premium
Clamping range [mm]	A	16 – 21						
Run-out ≤ [mm]		0,020						
Release stroke in Ø [mm]	C	0,4					0,5	
Reserve stroke in Ø [mm]	D	0,3						
Range / recommended workpiece tolerance [mm]		± 0,25						
Max. clamping length [mm]	AG	15						
Max. axial drawtube force pull / push] [kN]		10						
Max. radial clamping force [kN]		42						
RPM n max. [1/min.]		7000		6000		5500	5000	
Reception workpiece end-stop	FD	Ø 39 f7						
Bolt hole circle end-stop	B	LK Ø 57 [3 x M5]						
End-stop outer Ø [mm]	AZ	70						
Depth [mm]	BR	39,5						
End-stop outer Ø 2 [mm]	EM	45						
Length [mm]	H	47,5						
Total length [mm]	I	127		130		127	141,5	
Height [mm]	J	73		66,5		63	67,5	
Bolt hole circle	V	LK Ø 105 [3 x M8]	LK Ø 107 [3 x M6]	LK Ø 112 [3 x M8]	LK Ø 126 [3 x M6]	LK Ø 130 [3 x M8]	LK Ø 160 [3 x M8]	LK Ø 180 [3 x M8]
Outer Ø [mm]	AW	119	125	129	145	150	183	215
Weight [kg]		3		3,7	4	5,1	9,1	10
In stock		-	✔	✔	✔	✔	✔	✔
Material no.		10001014	10001646	10001020	10001654	10017073	10001028	10001662

Mounting precision for rotating clamping devices: Run-out ≤ 0.005 mm between chuck and adaptation clamping device. Run-out errors on the chuck must also be taken into consideration. Mounting repeatability for stationary clamping devices: ≤ 0.003 mm on the adaptation clamping device.


Segmented clamping bushings
Page 448


Accessory overview
Page 478

MANDO Adapt T212 SE. Technical data

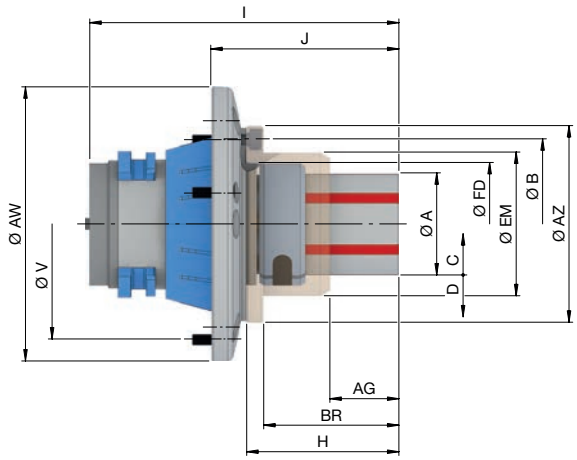

Size		0						
Adaptation size		**52**		**65**		**80**	**100**	
Suitable for		TOPlus mini / premium	all except TOPlus mini / premium	TOPlus mini / premium	all except TOPlus mini / premium	TOPlus mini / premium	TOPlus mini / premium	all except TOPlus mini / premium
Clamping range [mm]	A	20 – 28						
Run-out ≤ [mm]		0,010						
Release stroke in Ø [mm]	C	0,4					0,5	
Reserve stroke in Ø [mm]	D	0,3						
Range / recommended workpiece tolerance [mm]		± 0,25						
Max. clamping length [mm]	AG	21						
Max. axial drawtube force [pull / push] [kN]		10						
Max. radial clamping force [kN]		42						
RPM n max. [1/min.]		7000		6000		5500	5000	
Reception workpiece end-stop	FD	Ø 47 f7						
Bolt hole circle end-stop	B	LK Ø 70 [3 x M6]						
End-stop outer Ø [mm]	AZ	90						
Depth [mm]	BR	49,5						
End-stop outer Ø 2 [mm]	EM	56						
Length [mm]	H	58,5						
Total length [mm]	I	138		141		138	152,5	
Height [mm]	J	84		77,5		74	78,5	
Bolt hole circle	V	LK Ø 105 [3 x M8]	LK Ø 107 [3 x M6]	LK Ø 112 [3 x M8]	LK Ø 126 [3 x M6]	LK Ø 130 [3 x M8]	LK Ø 160 [3 x M8]	LK Ø 180 [3 x M8]
Outer Ø [mm]	AW	119	125	129	145	150	183	215
Weight [kg]		3,6	3,4	4,2	4,3	5,5	9,6	10,5
In stock		-	-	✔	✔	✔	✔	✔
Material no.		10001015	10001645	10001021	10001653	10017074	10001029	10001661

Mounting precision for rotating clamping devices: Run-out ≤ 0.005 mm between chuck and adaptation clamping device. Run-out errors on the chuck must also be taken into consideration. Mounting repeatability for stationary clamping devices: ≤ 0.003 mm on the adaptation clamping device.


Segmented clamping bushings
Page 448


Accessory overview
Page 478

MANDO Adapt T212 SE. Technical data

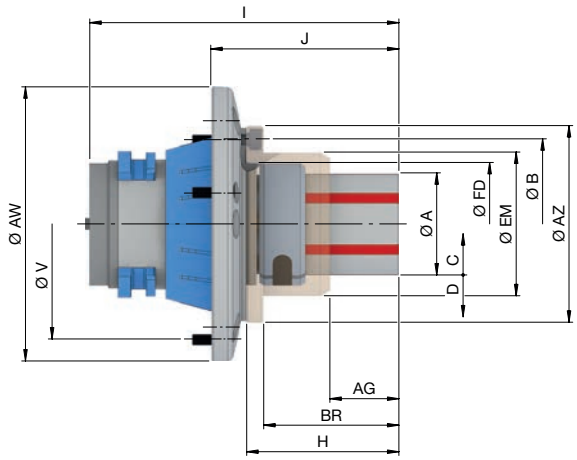

Size		**1**						
Adaptation size		**52**		**65**		**80**	**100**	
Suitable for		TOPlus mini / premium	all except TOPlus mini / premium	TOPlus mini / premium	all except TOPlus mini / premium	TOPlus mini / premium	TOPlus mini / premium	all except TOPlus mini / premium
Clamping range [mm]	A	26 – 38						
Run-out ≤ [mm]		0,010						
Release stroke in Ø [mm]	C	0,4		0,5				
Reserve stroke in Ø [mm]	D	0,3						
Range / recommended workpiece tolerance [mm]		± 0,25						
Max. clamping length [mm]	AG	25						
Max. axial drawtube force [pull / push] [kN]		10						
Max. radial clamping force [kN]		42						
RPM n max. [1/min.]		7000		6000		5500	5000	
Reception workpiece end-stop	FD	Ø 55 f7						
Bolt hole circle end-stop	B	LK Ø 75 [3 x M6]						
End-stop outer Ø [mm]	AZ	90						
Depth [mm]	BR	55,5						
End-stop outer Ø 2 [mm]	EM	62						
Length [mm]	H	64,5						
Total length [mm]	I	139		147,5		144	158,5	
Height [mm]	J	85		83,5		80	84,5	
Bolt hole circle	V	LK Ø 105 [3 x M8]	LK Ø 107 [3 x M6]	LK Ø 112 [3 x M8]	LK Ø 126 [3 x M6]	LK Ø 130 [3 x M8]	LK Ø 160 [3 x M8]	LK Ø 180 [3 x M8]
Outer Ø [mm]	AW	119	125	129	145	150	183	215
Weight [kg]		3,2		4,3	4,5	5,6	9,7	10,6
In stock		-	✔	✔	✔	✔	✔	✔
Material no.		10001016	10001644	10001022	10001652	10017075	10001030	10001660

Mounting precision for rotating clamping devices: Run-out ≤ 0.005 mm between chuck and adaptation clamping device. Run-out errors on the chuck must also be taken into consideration. Mounting repeatability for stationary clamping devices: ≤ 0.003 mm on the adaptation clamping device.


Segmented clamping bushings
Page 448


Accessory overview
Page 478

MANDO Adapt T212 SE. Technical data

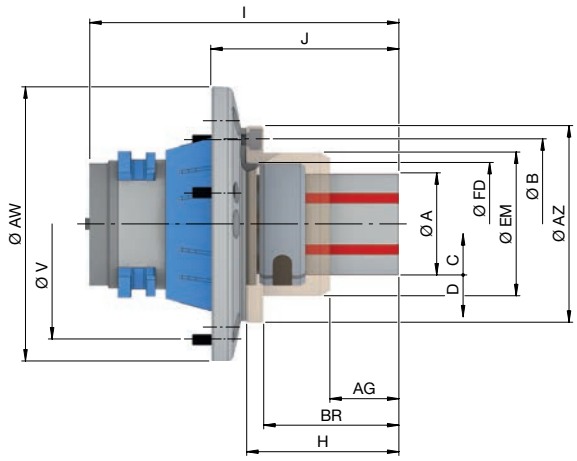

Size		2						
Adaptation size		**52**		**65**		**80**	**100**	
Suitable for		TOPlus mini / premium	all except TOPlus mini / premium	TOPlus mini / premium	all except TOPlus mini / premium	TOPlus mini / premium	TOPlus mini / premium	all except TOPlus mini / premium
Clamping range [mm]	A	36 – 54						
Run-out ≤ [mm]		0,010						
Release stroke in Ø [mm]	C	0,4		0,5				
Reserve stroke in Ø [mm]	D	0,3						
Range / recommended workpiece tolerance [mm]		± 0,25						
Max. clamping length [mm]	AG	40						
Max. axial drawtube force [pull / push] [kN]		20						
Max. radial clamping force [kN]		85						
RPM n max. [1/min.]		7000		6000		5500	5000	
Reception workpiece end-stop	FD	Ø 65 f7						
Bolt hole circle end-stop	B	LK Ø 90 [3 x M6]						
End-stop outer Ø [mm]	AZ	104						
Depth [mm]	BR	71,5						
End-stop outer Ø 2 [mm]	EM	75						
Length [mm]	H	80,5						
Total length [mm]	I	155		163,5		158	174,5	
Height [mm]	J	101		99,5		94	100,5	
Bolt hole circle	V	LK Ø 105 [3 x M8]	LK Ø 107 [3 x M6]	LK Ø 112 [3 x M8]	LK Ø 126 [3 x M6]	LK Ø 130 [3 x M8]	LK Ø 160 [3 x M8]	LK Ø 180 [3 x M8]
Outer Ø [mm]	AW	119	125	129	145	150	183	215
Weight [kg]		4	3,9	5	5,2	6	10,3	11,3
In stock		-	✔	✔	✔	✔	✔	✔
Material no.		10001017	10001643	10001023	10001651	10017076	10001031	10001659

Mounting precision for rotating clamping devices: Run-out ≤ 0.005 mm between chuck and adaptation clamping device. Run-out errors on the chuck must also be taken into consideration. Mounting repeatability for stationary clamping devices: ≤ 0.003 mm on the adaptation clamping device.


Segmented clamping bushings
Page 448


Accessory overview
Page 478

MANDO Adapt T212 SE. Technical data

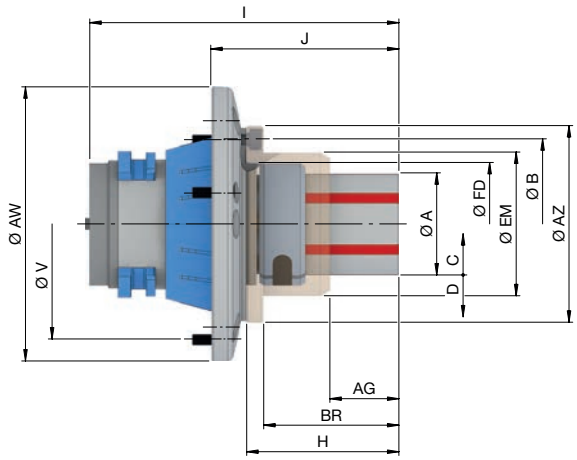

Size		**3**				
Adaptation size		**65**		**80**	**100**	
Suitable for		TOPlus mini / premium	all except TOPlus mini / premium	TOPlus mini / premium	TOPlus mini / premium	all except TOPlus mini / premium
Clamping range [mm]	A	50 – 80				
Run-out ≤ [mm]		0,010				
Release stroke in Ø [mm]	C	0,5				
Reserve stroke in Ø [mm]	D	0,4		0,3	0,4	
Range / recommended workpiece tolerance [mm]		± 0,35				
Max. clamping length [mm]	AG	44,5				
Max. axial drawtube force [pull / push] [kN]		25				
Max. radial clamping force [kN]		105				
RPM n max. [1/min.]		6000		5500	5000	
Reception workpiece end-stop	FD	Ø 83 f7				
Bolt hole circle end-stop	B	LK Ø 104 [3 x M6]				
End-stop outer Ø [mm]	AZ	120				
Depth [mm]	BR	78				
End-stop outer Ø 2 [mm]	EM	92.5				
Length [mm]	H	87,5				
Total length [mm]	I	170,5		166	181,5	
Height [mm]	J	106,5		102	107,5	
Bolt hole circle	V	LK Ø 112 [3 x M8]	LK Ø 126 [3 x M6]	LK Ø 130 [3 x M8]	LK Ø 160 [3 x M8]	LK Ø 180 [3 x M8]
Outer Ø [mm]	AW	129	145	150	183	215
Weight [kg]		5,9	6	6,7	11,2	12
In stock		✔	✔	✔	✔	✔
Material no.		10001024	10001650	10017077	10001032	10001658

Mounting precision for rotating clamping devices: Run-out ≤ 0.005 mm between chuck and adaptation clamping device. Run-out errors on the chuck must also be taken into consideration. Mounting repeatability for stationary clamping devices: ≤ 0.003 mm on the adaptation clamping device.


Segmented clamping bushings
Page 448


Accessory overview
Page 478

MANDO Adapt T212 SE. Technical data

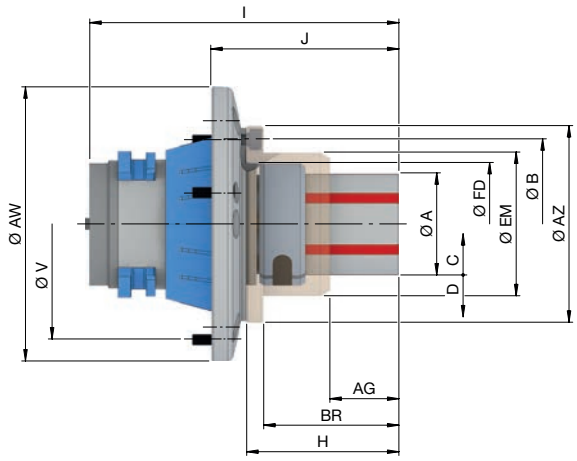

Size		4				
Adaptation size		**65**		**80**	**100**	
Suitable for		TOPlus mini / premium	all except TOPlus mini / premium	TOPlus mini / premium	TOPlus mini / premium	all except TOPlus mini / premium
Clamping range [mm]	A	69 – 100				
Run-out ≤ [mm]		0,010				
Release stroke in Ø [mm]	C	0,5				
Reserve stroke in Ø [mm]	D	0,4		0,6	0,5	
Range / recommended workpiece tolerance [mm]		± 0,4				
Max. clamping length [mm]	AG	52,5				
Max. axial drawtube force [pull / push] [kN]		35				
Max. radial clamping force [kN]		150				
RPM n max. [1/min.]		6000		5500	5000	
Reception workpiece end-stop	FD	Ø 103 f7				
Bolt hole circle end-stop	B	LK Ø 124 [3 x M6]				
End-stop outer Ø [mm]	AZ	138				
Depth [mm]	BR	87,5				
End-stop outer Ø 2 [mm]	EM	113				
Length [mm]	H	97,5				
Total length [mm]	I	180,5		176	191,5	
Height [mm]	J	116,5		112	117,5	
Bolt hole circle	V	LK Ø 112 [3 x M8]	LK Ø 126 [3 x M6]	LK Ø 130 [3 x M8]	LK Ø 160 [3 x M8]	LK Ø 180 [3 x M8]
Outer Ø [mm]	AW	138	145	150	183	215
Weight [kg]		7,5	7,4	8,2	12,6	13,5
In stock		✔	✔	✔	✔	✔
Material no.		10001025	10001649	10017078	10001033	10001657

Mounting precision for rotating clamping devices: Run-out ≤ 0.005 mm between chuck and adaptation clamping device. Run-out errors on the chuck must also be taken into consideration. Mounting repeatability for stationary clamping devices: ≤ 0.003 mm on the adaptation clamping device.


Segmented clamping bushings
Page 448


Accessory overview
Page 478

MANDO Adapt T211 RD. Order overview

Size	Clamping range [mm]	Adaptation size	Material no.	In stock	Suitable for					
										
					SPANNTOP mini pull-back Page 72	SPANNTOP combi pull-back Page 92	SPANNTOP modular Page 92	TOROK RD Page 122	HYDROK RD Page 252	MANOK plus RD Page 244
0	20 – 28	42	10001561	✔	✔	✔	✔	✔	✔	✔
		52	10001558	✔						
		65	10001550	✔						
		80	10001540	✔						
		100	10001549	✔						
1	26 – 38	42	10001563	-	✔	✔	✔	✔	✔	✔
		52	10001559	✔						
		65	10001551	✔						
		80	10001541	✔						
		100	10001545	✔						
2	36 – 54	42	10001562	-	✔	✔	✔	✔	✔	✔
		52	10001560	✔						
		65	10001552	✔						
		80	10001542	✔						
		100	10001546	✔						
3	50 – 80	65	10001553	✔	✔	✔	✔	✔	✔	✔
		80	10001543	✔						
		100	10001547	✔						
4	69 – 120	65	10001554	✔	✔	✔	✔	✔	✔	✔
		80	10001544	✔						
		100	10001548	✔						

Detailed technical data follows.

Scope of delivery

- Adaptation mandrel
- Draw bolt

MANDO Adapt T211 RD. Technical data

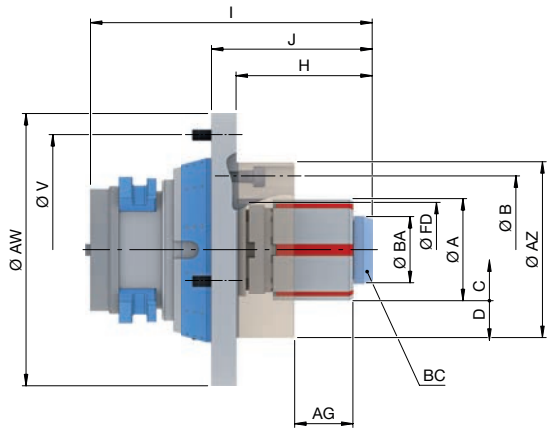

Size		0				
Adaptation size		**42**	**52**	**65**	**80**	**100**
Clamping range [mm]	A	20 – 28				
Run-out ≤ [mm]		0,010				
Max. radial clamping force [kN]		42				
Max. axial drawtube force [pull / push] [kN]		10				
Max. clamping length [mm]	AG	22				
Release stroke in Ø [mm]	C	0,4				
Reserve stroke in Ø [mm]	D	0,3				
Range / recommended workpiece tolerance [mm]		± 0,25				
RPM n max. [1/min.]		7000		6000	5500	5000
Max. actuating torque [Nm]	BC	10				
Draw bolt Ø [mm]	BA	19				
Reception workpiece end-stop	FD	Ø 32 f7				
End-stop outer Ø [mm]	AZ	65				
Bolt hole circle end-stop	B	LK Ø 50 [3 x M6]				
Length [mm]	H	42,3		42		41,5
Total length [mm]	I	106	109	119		129
Height [mm]	J	55				
Bolt hole circle	V	LK Ø 107 [3 x M6]		LK Ø 126 [3 x M6]	LK Ø 139 [3 x M6]	LK Ø 180 [3 x M8]
Outer Ø [mm]	AW	125		144	160	215
Weight [kg]		2,1	2,2	3,7	4,9	9,2
In stock		✔	✔	✔	✔	✔
Material no.		10001561	10001558	10001550	10001540	10001549

Mounting precision for rotating clamping devices: Run-out ≤ 0.005 mm between chuck and adaptation clamping device. Run-out errors on the chuck must also be taken into consideration. Mounting repeatability for stationary clamping devices: ≤ 0.003 mm on the adaptation clamping device.


Segmented clamping bushings
Page 442


Adaptation ring
Page 508


Accessory overview
Page 478

MANDO Adapt T211 RD. Technical data

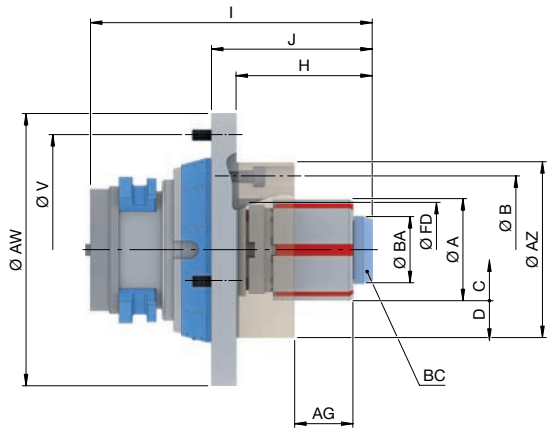

Size		1				
Adaptation size		**42**	**52**	**65**	**80**	**100**
Clamping range [mm]	A	26 – 38				
Run-out ≤ [mm]		0,010				
Max. radial clamping force [kN]		42				
Max. axial drawtube force [pull / push] [kN]		10				
Max. clamping length [mm]	AG	25,4	26			
Release stroke in Ø [mm]	C	0,4				
Reserve stroke in Ø [mm]	D	0,3				
Range / recommended workpiece tolerance [mm]		± 0,25				
RPM n max. [1/min.]		7000		6000	5500	5000
Max. actuating torque [Nm]	BC	20				
Draw bolt Ø [mm]	BA	25				
Reception workpiece end-stop	FD	Ø 41 f7				
End-stop outer Ø [mm]	AZ	69				
Bolt hole circle end-stop	B	LK Ø 55 [3 x M6]				
Length [mm]	H	52,3		52		51,5
Total length [mm]	I	116	119	129		139
Height [mm]	J	65				
Bolt hole circle	V	LK Ø 107 [3 x M6]		LK Ø 126 [3 x M6]	LK Ø 139 [3 x M6]	LK Ø 180 [3 x M8]
Outer Ø [mm]	AW	125		144	160	215
Weight [kg]		2,2	2,4	3,7	5	9,3
In stock		-	✔	✔	✔	✔
Material no.		10001563	10001559	10001551	10001541	10001545

Mounting precision for rotating clamping devices: Run-out ≤ 0.005 mm between chuck and adaptation clamping device. Run-out errors on the chuck must also be taken into consideration. Mounting repeatability for stationary clamping devices: ≤ 0.003 mm on the adaptation clamping device.


Segmented clamping bushings
Page 442


Adaptation ring
Page 508


Accessory overview
Page 478

MANDO Adapt T211 RD. Technical data

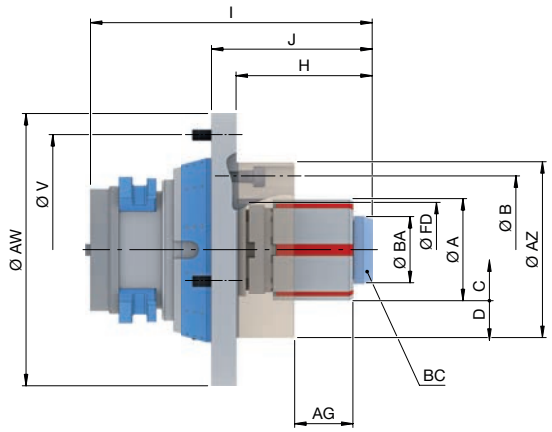

Size		2				
Adaptation size		**42**	**52**	**65**	**80**	**100**
Clamping range [mm]	A	36 – 54				
Run-out ≤ [mm]		0,010				
Max. radial clamping force [kN]		85				
Max. axial drawtube force [pull / push] [kN]		20				
Max. clamping length [mm]	AG	43	42,4	43		
Release stroke in Ø [mm]	C	0,4		0,5		
Reserve stroke in Ø [mm]	D	0,3				
Range / recommended workpiece tolerance [mm]		± 0,25				
RPM n max. [1/min.]		7000		6000	5500	5000
Max. actuating torque [Nm]	BC	25				
Draw bolt Ø [mm]	BA	35				
Reception workpiece end-stop	FD	Ø 50 f7				
End-stop outer Ø [mm]	AZ	93				
Bolt hole circle end-stop	B	LK Ø 78 [3 x M6]				
Length [mm]	H	72,3		72		71,5
Total length [mm]	I	136	139	149		159
Height [mm]	J	85				
Bolt hole circle	V	LK Ø 107 [3 x M6]		LK Ø 126 [3 x M6]	LK Ø 139 [3 x M6]	LK Ø 180 [3 x M8]
Outer Ø [mm]	AW	125		144	160	215
Weight [kg]		2,5	2,7	4	5,3	9,6
In stock		-	✔	✔	✔	✔
Material no.		10001562	10001560	10001552	10001542	10001546

Mounting precision for rotating clamping devices: Run-out ≤ 0.005 mm between chuck and adaptation clamping device. Run-out errors on the chuck must also be taken into consideration. Mounting repeatability for stationary clamping devices: ≤ 0.003 mm on the adaptation clamping device.


Segmented clamping bushings
Page 442


Adaptation ring
Page 508


Accessory overview
Page 478

MANDO Adapt T211 RD. Technical data

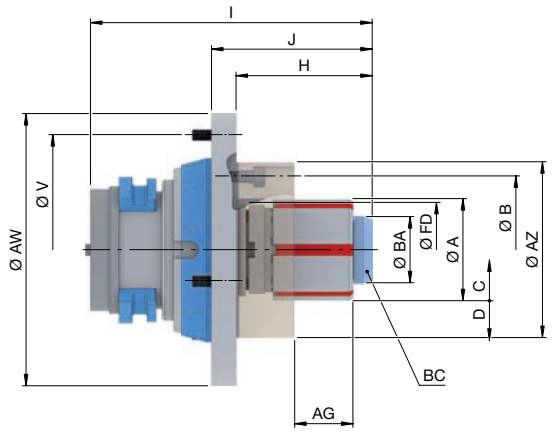

Size		3		
Adaptation size		**65**	**80**	**100**
Clamping range [mm]	A	50 – 80		
Run-out ≤ [mm]		0,010		
Max. radial clamping force [kN]		105		
Max. axial drawtube force [pull / push] [kN]		25		
Max. clamping length [mm]	AG	49		
Release stroke in Ø [mm]	C	0,5		
Reserve stroke in Ø [mm]	D	0,4		
Range / recommended workpiece tolerance [mm]		± 0,35		
RPM n max. [1/min.]		6000	5500	5000
Max. actuating torque [Nm]	BC	55		
Draw bolt Ø [mm]	BA	49		
Reception workpiece end-stop	FD	Ø 65 f7		
End-stop outer Ø [mm]	AZ	96		
Bolt hole circle end-stop	B	LK Ø 80 [3 x M6]		
Length [mm]	H	82		81,5
Total length [mm]	I	159		169
Height [mm]	J	95		
Bolt hole circle	V	LK Ø 126 [3 x M6]	LK Ø 139 [3 x M6]	LK Ø 180 [3 x M8]
Outer Ø [mm]	AW	144	160	215
Weight [kg]		4,7	6	10,3
In stock		✔	✔	✔
Material no.		10001553	10001543	10001547

Mounting precision for rotating clamping devices: Run-out ≤ 0.005 mm between chuck and adaptation clamping device. Run-out errors on the chuck must also be taken into consideration. Mounting repeatability for stationary clamping devices: ≤ 0.003 mm on the adaptation clamping device.


Segmented clamping bushings
Page 442


Adaptation ring
Page 508


Accessory overview
Page 478

MANDO Adapt T211 RD. Technical data

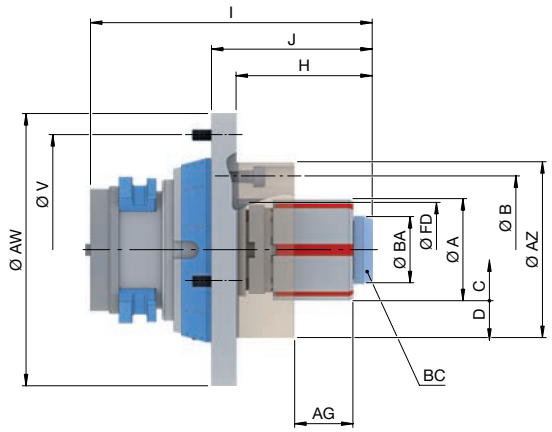

Size		4		
Adaptation size		**65**	**80**	**100**
Clamping range [mm]	A	69 – 120		
Run-out ≤ [mm]		0,010		
Max. radial clamping force [kN]		150		
Max. axial drawtube force [pull / push] [kN]		35		
Max. clamping length [mm]	AG	59		
Release stroke in Ø [mm]	C	0,5		
Reserve stroke in Ø [mm]	D	0,6		
Range / recommended workpiece tolerance [mm]		± 0,4		
RPM n max. [1/min.]		6000	5500	5000
Max. actuating torque [Nm]	BC	65		
Draw bolt Ø [mm]	BA	68		
Reception workpiece end-stop	FD	Ø 78 f7		
End-stop outer Ø [mm]	AZ	120		
Bolt hole circle end-stop	B	LK Ø 90 [3 x M6]		
Length [mm]	H	97		96,5
Total length [mm]	I	174		184
Height [mm]	J	110		
Bolt hole circle	V	LK Ø 126 [3 x M6]	LK Ø 139 [3 x M6]	LK Ø 180 [3 x M8]
Outer Ø [mm]	AW	144	160	215
Weight [kg]		5,7	6,9	11,2
In stock		✔	✔	✔
Material no.		10001554	10001544	10001548

Mounting precision for rotating clamping devices: Run-out ≤ 0.005 mm between chuck and adaptation clamping device. Run-out errors on the chuck must also be taken into consideration. Mounting repeatability for stationary clamping devices: ≤ 0.003 mm on the adaptation clamping device.

For size 4, clamping range 101 – 120 mm, a max. speed of 4200 RPM applies.


Segmented clamping bushings
Page 442


Adaptation ring
Page 508


Accessory overview
Page 478

MANDO Adapt T212 RD. Order overview

Size	Clamping range [mm]	Adaptation size	Material no.	In stock	Suitable for SPANNTOP mini pull-back Page 72	SPANNTOP combi pull-back Page 92	SPANNTOP modular Page 92	TOROK RD Page 122	HYDROK RD Page 252	MANOK plus RD Page 244
XXS	8 – 13	42	10001619	-	✔	✔	✔	✔	✔	✔
		52	10001620	-						
		65	10001621	✔						
		80	10001622	-						
		100	10001623	-						
XS	13 – 19	42	10001618	✔	✔	✔	✔	✔	✔	✔
		52	10001588	✔						
		65	10001593	✔						
		80	10001600	✔						
		100	10001607	✔						
S	16 – 21	42	10001614	✔	✔	✔	✔	✔	✔	✔
		52	10001589	✔						
		65	10001594	✔						
		80	10001601	✔						
		100	10001608	✔						
0	20 – 28	42	10001615	✔	✔	✔	✔	✔	✔	✔
		52	10001590	✔						
		65	10001595	✔						
		80	10001602	✔						
		100	10001609	✔						
1	26 – 38	42	10001617	✔	✔	✔	✔	✔	✔	✔
		52	10001591	✔						
		65	10001596	✔						
		80	10001603	✔						
		100	10001610	✔						
2	36 – 54	42	10001616	✔	✔	✔	✔	✔	✔	✔
		52	10001592	✔						
		65	10001597	✔						
		80	10001604	✔						
		100	10001611	✔						
3	50 – 80	65	10001598	✔	✔	✔	✔	✔	✔	✔
		80	10001605	✔						
		100	10001612	✔						
		125	10001624	-						
4	69 – 100	65	10001599	✔	✔	✔	✔	✔	✔	✔
		80	10001606	✔						
		100	10001613	✔						
		125	10001625	-						
5	100 – 130	125	10001626	✔		✔	✔			
6	130 – 160	125	10001627	-		✔	✔			
7	160 – 190	125	10001628	✔		✔	✔			

Detailed technical data below.
Please note: SPANNTOP nova 125 is only compatible with MANDO Adapt manufactured in 2015 or later.

Scope of delivery

- Adaptation mandrel
- Coupling ring
- Mounting aid depending on size

MANDO Adapt T212 RD. Technical data

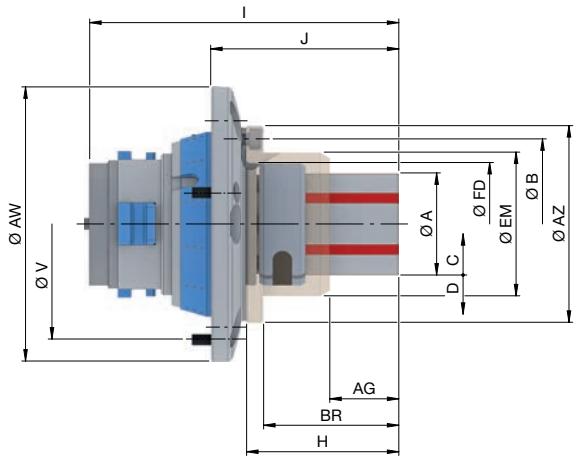

Size		XXS				
Adaptation size		**42**	**52**	**65**	**80**	**100**
Clamping range [mm]	A	8 – 13				
Run-out ≤ [mm]		0,020				
Release stroke in Ø [mm]	C	0,2				
Reserve stroke in Ø [mm]	D	0,2				
Range / recommended workpiece tolerance [mm]		± 0,15				
Max. clamping length [mm]	AG	12,9				
Max. axial drawtube force [pull / push] [kN]		10				
Max. radial clamping force [kN]		42				
RPM n max. [1/min.]		7000		6000	5500	5000
Reception workpiece end-stop	FD	Ø 34 f7				
Bolt hole circle end-stop	B	LK Ø 53 [3 x M5]				
End-stop outer Ø [mm]	AZ	65				
Depth [mm]	BR	37,5				
End-stop outer Ø 2 [mm]	EM	41				
Length [mm]	H	45,5				
Total length [mm]	I	124,5	124,3	127,5	124,5	139
Height [mm]	J	71		64,5	61	65,5
Bolt hole circle	V	LK Ø 107 [3 x M6]		LK Ø 126 [3 x M6]	LK Ø 139 [3 x M6]	LK Ø 180 [3 x M8]
Outer Ø [mm]	AW	125		145	160	215
Weight [kg]		2,8	2,9	4,1	5	10,1
In stock		-	-	✔	-	-
Material no.		10001619	10001620	10001621	10001622	10001623

Please note: The maximum clamping length [AG] varies from 6 to 12.9 mm depending on the clamping diameter.

Mounting precision for rotating clamping devices: Run-out ≤ 0.005 mm between chuck and adaptation clamping device. Run-out errors on the chuck must also be taken into consideration. Mounting repeatability for stationary clamping devices: ≤ 0.003 mm on the adaptation clamping device.


Segmented clamping bushings
Page 442


Adaptation ring
Page 508


Accessory overview
Page 478

MANDO Adapt T212 RD. Technical data

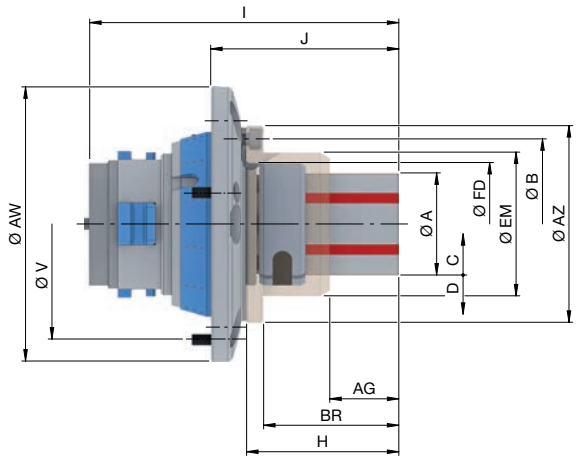

Size		XS				
Adaptation size		**42**	**52**	**65**	**80**	**100**
Clamping range [mm]	A	13 – 19				
Run-out ≤ [mm]		0,020				
Release stroke in Ø [mm]	C	0,4				0,5
Reserve stroke in Ø [mm]	D	0,3				
Range / recommended workpiece tolerance [mm]		± 0,25				
Max. clamping length [mm]	AG	14				
Max. axial drawtube force [pull / push] [kN]		10				
Max. radial clamping force [kN]		42				
RPM n max. [1/min.]		7000		6000	5500	5000
Reception workpiece end-stop	FD	Ø 36 f7				
Bolt hole circle end-stop	B	LK Ø 53 [3 x M5]				
End-stop outer Ø [mm]	AZ	65				
Depth [mm]	BR	37,5				
End-stop outer Ø 2 [mm]	EM	42				
Length [mm]	H	45,5				
Total length [mm]	I	125		128	125	139,5
Height [mm]	J	71		64,5	61	65,5
Bolt hole circle	V	LK Ø 107 [3 x M6]		LK Ø 126 [3 x M6]	LK Ø 139 [3 x M6]	LK Ø 180 [3 x M8]
Outer Ø [mm]	AW	125		145	160	215
Weight [kg]		2,8	3	4	5	10,1
In stock		✔	✔	✔	✔	✔
Material no.		10001618	10001588	10001593	10001600	10001607

Mounting precision for rotating clamping devices: Run-out ≤ 0.005 mm between chuck and adaptation clamping device. Run-out errors on the chuck must also be taken into consideration. Mounting repeatability for stationary clamping devices: ≤ 0.003 mm on the adaptation clamping device.


Segmented clamping bushings
Page 442


Adaptation ring
Page 508


Accessory overview
Page 478

MANDO Adapt T212 RD. Technical data

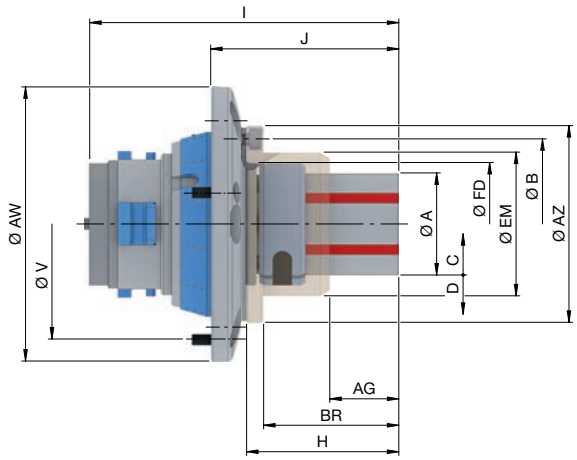

Size		S				
Adaptation size		**42**	**52**	**65**	**80**	**100**
Clamping range [mm]	A	16 – 21				
Run-out ≤ [mm]		0,020				
Release stroke in Ø [mm]	C	0,4				0,5
Reserve stroke in Ø [mm]	D	0,3				
Range / recommended workpiece tolerance [mm]		± 0,25				
Max. clamping length [mm]	AG	15				
Max. axial drawtube force [pull / push] [kN]		10				
Max. radial clamping force [kN]		42				
RPM n max. [1/min.]		7000		6000	5500	5000
Reception workpiece end-stop	FD	Ø 39 f7				
Bolt hole circle end-stop	B	LK Ø 57 [3 x M5]				
End-stop outer Ø [mm]	AZ	70				
Depth [mm]	BR	39,5				
End-stop outer Ø 2 [mm]	EM	45				
Length [mm]	H	47,5				
Total length [mm]	I	124	127	130	127	141,5
Height [mm]	J	73		66,5	63	67,5
Bolt hole circle	V	LK Ø 107 [3 x M6]		LK Ø 126 [3 x M6]	LK Ø 139 [3 x M6]	LK Ø 180 [3 x M8]
Outer Ø [mm]	AW	125		145	160	215
Weight [kg]		3	3,1	4,1	5	10,2
In stock		✔	✔	✔	✔	✔
Material no.		10001614	10001589	10001594	10001601	10001608

Mounting precision for rotating clamping devices: Run-out ≤ 0.005 mm between chuck and adaptation clamping device. Run-out errors on the chuck must also be taken into consideration. Mounting repeatability for stationary clamping devices: ≤ 0.003 mm on the adaptation clamping device.


Segmented clamping bushings
Page 442


Adaptation ring
Page 508


Accessory overview
Page 478

MANDO Adapt T212 RD. Technical data

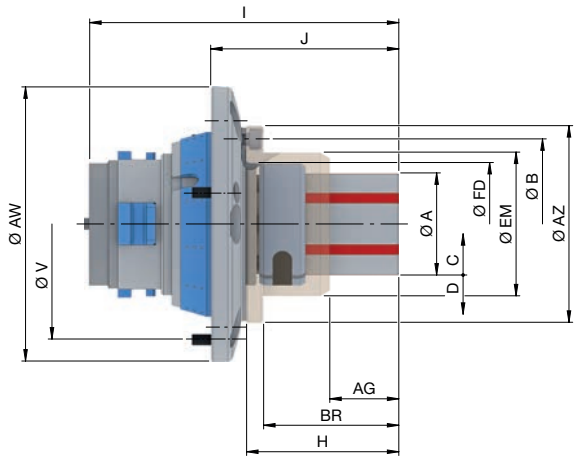

Size		0				
Adaptation size		**42**	**52**	**65**	**80**	**100**
Clamping range [mm]	A	20 – 28				
Run-out ≤ [mm]		0,010				
Release stroke in Ø [mm]	C	0,4				0,5
Reserve stroke in Ø [mm]	D	0,3				
Range / recommended workpiece tolerance [mm]		± 0,25				
Max. clamping length [mm]	AG	21				
Max. axial drawtube force [pull / push] [kN]		10				
Max. radial clamping force [kN]		42				
RPM n max. [1/min.]		7000		6000	5500	5000
Reception workpiece end-stop	FD	Ø 47 f7				
Bolt hole circle end-stop	B	LK Ø 70 [3 x M6]				
End-stop outer Ø [mm]	AZ	90				
Depth [mm]	BR	49,5				
End-stop outer Ø 2 [mm]	EM	56				
Length [mm]	H	58,5				
Total length [mm]	I	138		141	138	157
Height [mm]	J	84		77,5	74	78,5
Bolt hole circle	V	LK Ø 107 [3 x M6]		LK Ø 126 [3 x M6]	LK Ø 139 [3 x M6]	LK Ø 180 [3 x M8]
Outer Ø [mm]	AW	125		145	160	215
Weight [kg]		3,4	3,6	4,5	5,5	10,6
In stock		✔	✔	✔	✔	✔
Material no.		10001615	10001590	10001595	10001602	10001609

Mounting precision for rotating clamping devices: Run-out ≤ 0.005 mm between chuck and adaptation clamping device. Run-out errors on the chuck must also be taken into consideration. Mounting repeatability for stationary clamping devices: ≤ 0.003 mm on the adaptation clamping device.


Segmented clamping bushings
Page 442


Adaptation ring
Page 508


Accessory overview
Page 478

MANDO Adapt T212 RD. Technical data

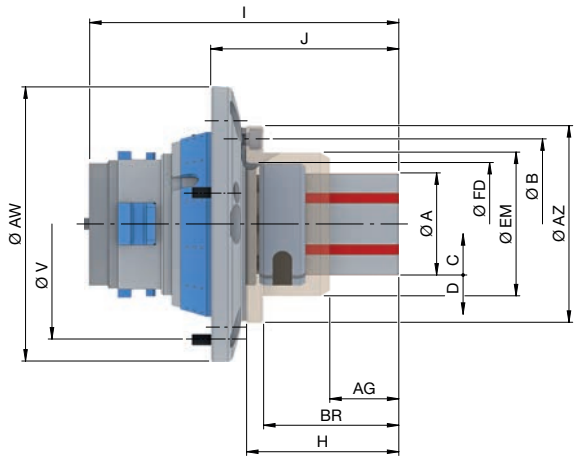

Size		1				
Adaptation size		**42**	**52**	**65**	**80**	**100**
Clamping range [mm]	A	26 – 38				
Run-out ≤ [mm]		0,010				
Release stroke in Ø [mm]	C	0,4		0,5		
Reserve stroke in Ø [mm]	D	0,3				
Range / recommended workpiece tolerance [mm]		± 0,25				
Max. clamping length [mm]	AG	25				
Max. axial drawtube force [pull / push] [kN]		10				
Max. radial clamping force [kN]		42				
RPM n max. [1/min.]		7000		6000	5500	5000
Reception workpiece end-stop	FD	Ø 55 f7				
Bolt hole circle end-stop	B	LK Ø 75 [3 x M6]				
End-stop outer Ø [mm]	AZ	90				
Depth [mm]	BR	55,5				
End-stop outer Ø 2 [mm]	EM	62				
Length [mm]	H	64,5				
Total length [mm]	I	136	139	147,5	146,5	158,5
Height [mm]	J	85		83,5	80	84,5
Bolt hole circle	V	LK Ø 107 [3 x M6]		LK Ø 126 [3 x M6]	LK Ø 139 [3 x M6]	LK Ø 180 [3 x M8]
Outer Ø [mm]	AW	125		145	160	215
Weight [kg]		3,2	3,4	4,6	5,6	10,7
In stock		✔	✔	✔	✔	✔
Material no.		10001617	10001591	10001596	10001603	10001610

Mounting precision for rotating clamping devices: Run-out ≤ 0.005 mm between chuck and adaptation clamping device. Run-out errors on the chuck must also be taken into consideration. Mounting repeatability for stationary clamping devices: ≤ 0.003 mm on the adaptation clamping device.


Segmented clamping bushings
Page 442


Adaptation ring
Page 508


Accessory overview
Page 478

MANDO Adapt T212 RD. Technical data

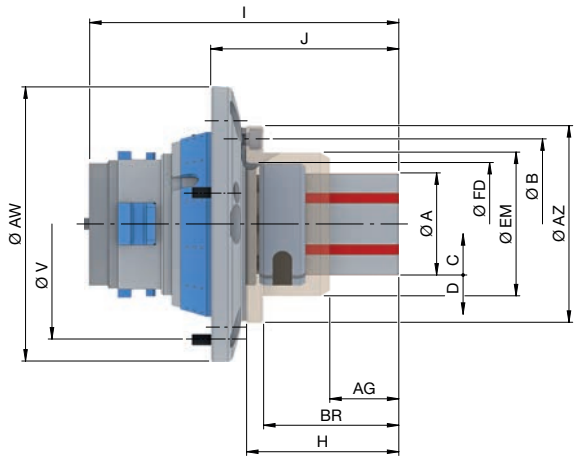

Size		2				
Adaptation size		**42**	**52**	**65**	**80**	**100**
Clamping range [mm]	A	36 – 54				
Run-out ≤ [mm]		0,010				
Release stroke in Ø [mm]	C	0,4		0,5		
Reserve stroke in Ø [mm]	D	0,3				
Range / recommended workpiece tolerance [mm]		± 0,25				
Max. clamping length [mm]	AG	40				
Max. axial drawtube force [pull / push] [kN]		20				
Max. radial clamping force [kN]		85				
RPM n max. [1/min.]		7000		6000	5500	5000
Reception workpiece end-stop	FD	Ø 65 f7				
Bolt hole circle end-stop	B	LK Ø 90 [3 x M6]				
End-stop outer Ø [mm]	AZ	104				
Depth [mm]	BR	71,5				
End-stop outer Ø 2 [mm]	EM	75				
Length [mm]	H	80,5				
Total length [mm]	I	152	155	163,5	160,5	174,5
Height [mm]	J	101		99,5	94	100,5
Bolt hole circle	V	LK Ø 107 [3 x M6]		LK Ø 126 [3 x M6]	LK Ø 139 [3 x M6]	LK Ø 180 [3 x M8]
Outer Ø [mm]	AW	125		145	160	215
Weight [kg]		3,9	4	5,4	6	11,3
In stock		✔	✔	✔	✔	✔
Material no.		10001616	10001592	10001597	10001604	10001611

Mounting precision for rotating clamping devices: Run-out ≤ 0.005 mm between chuck and adaptation clamping device. Run-out errors on the chuck must also be taken into consideration. Mounting repeatability for stationary clamping devices: ≤ 0.003 mm on the adaptation clamping device.


Segmented clamping bushings
Page 442


Adaptation ring
Page 508


Accessory overview
Page 478

MANDO Adapt T212 RD. Technical data

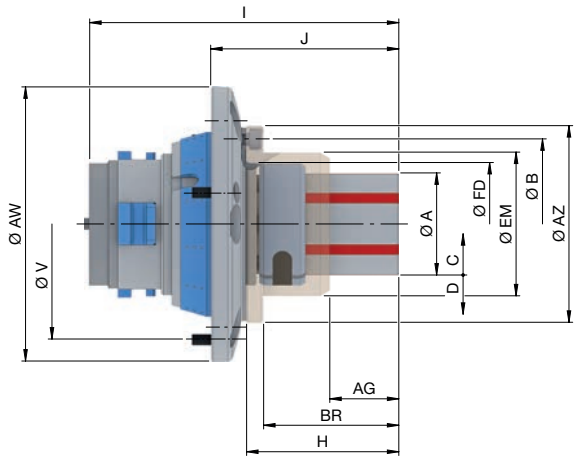

Size		3			
Adaptation size		**65**	**80**	**100**	**125**
Clamping range [mm]	A	50 – 80			
Run-out ≤ [mm]		0,010			
Release stroke in Ø [mm]	C	0,5			
Reserve stroke in Ø [mm]	D	0,4	0,3	0,4	
Range / recommended workpiece tolerance [mm]		± 0,35			
Max. clamping length [mm]	AG	44,5			
Max. axial drawtube force [pull / push] [kN]		25			
Max. radial clamping force [kN]		105			
RPM n max. [1/min.]		6000	5500	5000	3200
Reception workpiece end-stop	FD	Ø 83 f7			
Bolt hole circle end-stop	B	LK Ø 104 [3 x M6]			
End-stop outer Ø [mm]	AZ	120			
Depth [mm]	BR	78			
End-stop outer Ø 2 [mm]	EM	92.5			
Length [mm]	H	87,5			
Total length [mm]	I	170,5	168,5	181,5	200,5
Height [mm]	J	106,5	102	107,5	122,5
Bolt hole circle	V	LK Ø 126 [3 x M6]	LK Ø 139 [3 x M6]	LK Ø 180 [3 x M8]	LK Ø 208,5 [6 x M8]
Outer Ø [mm]	AW	145	160	215	226
Weight [kg]		6,2	7	12,2	24,3
In stock		✔	✔	✔	-
Material no.		10001598	10001605	10001612	10001624

Mounting precision for rotating clamping devices: Run-out ≤ 0.005 mm between chuck and adaptation clamping device. Run-out errors on the chuck must also be taken into consideration. Mounting repeatability for stationary clamping devices: ≤ 0.003 mm on the adaptation clamping device.

		
Segmented clamping bushings Page 442	Adaptation ring Page 508	Accessory overview Page 478

MANDO Adapt T212 RD. Technical data

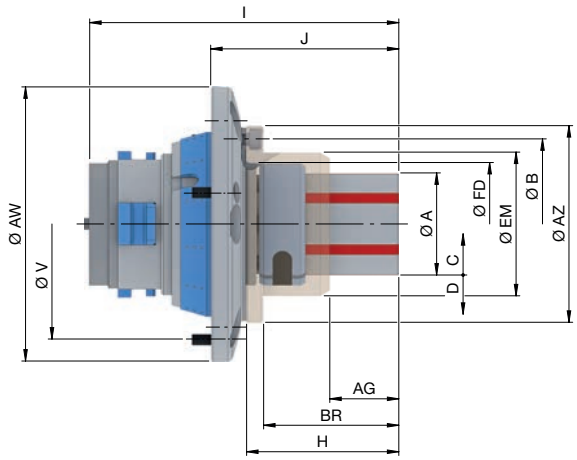

Size		4			
Adaptation size		**65**	**80**	**100**	**125**
Clamping range [mm]	A	69 – 100			
Run-out ≤ [mm]		0,010			
Release stroke in Ø [mm]	C	0,5	0,6	0,7	0,6
Reserve stroke in Ø [mm]	D	0,5			
Range / recommended workpiece tolerance [mm]		± 0,35	± 0,4		
Max. clamping length [mm]	AG	52,5			
Max. axial drawtube force [pull / push] [kN]		35			
Max. radial clamping force [kN]		150			
RPM n max. [1/min.]		6000	5500	5000	3200
Reception workpiece end-stop	FD	Ø 103 f7			
Bolt hole circle end-stop	B	LK Ø 124 [3 x M6]			
End-stop outer Ø [mm]	AZ	138	138,5	138	
Depth [mm]	BR	87,5			82,5
End-stop outer Ø 2 [mm]	EM	113			
Length [mm]	H	97,5			
Total length [mm]	I	180,5	176	191,5	210
Height [mm]	J	116,5	112	117,5	130
Bolt hole circle	V	LK Ø 126 [3 x M6]	LK Ø 139 [3 x M6]	LK Ø 180 [3 x M8]	LK Ø 208,5 [6 x M8]
Outer Ø [mm]	AW	145	160	215	221,5
Weight [kg]		7,6	8,3	13,6	25
In stock		✔	✔	✔	-
Material no.		10001599	10001606	10001613	10001625

Mounting precision for rotating clamping devices: Run-out ≤ 0.005 mm between chuck and adaptation clamping device. Run-out errors on the chuck must also be taken into consideration. Mounting repeatability for stationary clamping devices: ≤ 0.003 mm on the adaptation clamping device.

Please note: SPANNTOP nova 125 is only compatible with MANDO Adapt manufactured in 2015 or later.


Segmented clamping bushings
Page 442


Adaptation ring
Page 508


Accessory overview
Page 478

MANDO Adapt T212 RD. Technical data

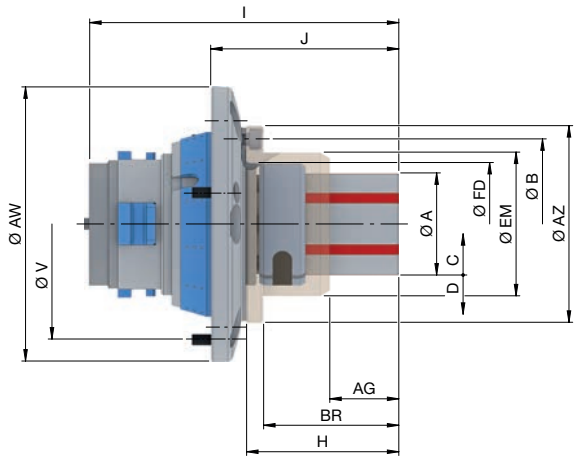

Size		5
Adaptation size		**125**
Clamping range [mm]	A	100 – 130
Run-out ≤ [mm]		0,010
Release stroke in Ø [mm]	C	0,6
Reserve stroke in Ø [mm]	D	0,6
Range / recommended workpiece tolerance [mm]		± 0,45
Max. clamping length [mm]	AG	53
Max. axial drawtube force [pull / push] [kN]		40
Max. radial clamping force [kN]		170
RPM n max. [1/min.]		3200
Reception workpiece end-stop	FD	Ø 140 f7
Bolt hole circle end-stop	B	LK Ø 176 [3 x M8]
End-stop outer Ø [mm]	AZ	195
Depth [mm]	BR	99
End-stop outer Ø 2 [mm]	EM	160
Length [mm]	H	112
Total length [mm]	I	218
Height [mm]	J	140
Bolt hole circle	V	LK Ø 208,5 [6 x M8]
Outer Ø [mm]	AW	228
Weight [kg]		24,3
In stock		✔
Material no.		10001626

Mounting precision for rotating clamping devices: Run-out ≤ 0.005 mm between chuck and adaptation clamping device. Run-out errors on the chuck must also be taken into consideration. Mounting repeatability for stationary clamping devices: ≤ 0.003 mm on the adaptation clamping device.

Please note: SPANNTOP nova 125 is only compatible with MANDO Adapt manufactured in 2015 or later.


Segmented clamping bushings
Page 442


Accessory overview
Page 478

MANDO Adapt T212 RD. Technical data

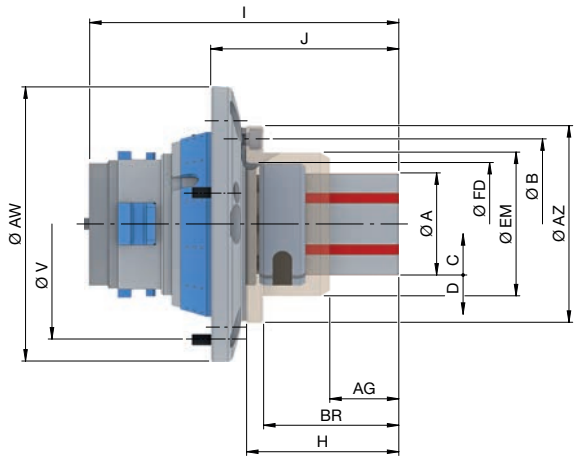

Size		**6**
Adaptation size		**125**
Clamping range [mm]	A	130 – 160
Run-out ≤ [mm]		0,010
Release stroke in Ø [mm]	C	0,6
Reserve stroke in Ø [mm]	D	0,6
Range / recommended workpiece tolerance [mm]		± 0,5
Max. clamping length [mm]	AG	61
Max. axial drawtube force [pull / push] [kN]		40
Max. radial clamping force [kN]		170
RPM n max. [1/min.]		3200
Reception workpiece end-stop	FD	Ø 164 f7
Bolt hole circle end-stop	B	LK Ø 200 [3 x M8]
End-stop outer Ø [mm]	AZ	226
Depth [mm]	BR	107,5
End-stop outer Ø 2 [mm]	EM	184
Length [mm]	H	121,5
Total length [mm]	I	227,5
Height [mm]	J	149,5
Bolt hole circle	V	LK Ø 208,5 [6 x M8]
Outer Ø [mm]	AW	231
Weight [kg]		24,3
In stock		-
Material no.		10001627

Mounting precision for rotating clamping devices: Run-out ≤ 0.005 mm between chuck and adaptation clamping device. Run-out errors on the chuck must also be taken into consideration. Mounting repeatability for stationary clamping devices: ≤ 0.003 mm on the adaptation clamping device.

Please note: SPANNTOP nova 125 is only compatible with MANDO Adapt manufactured in 2015 or later.


Segmented clamping bushings
Page 442


Accessory overview
Page 478

MANDO Adapt T212 RD. Technical data

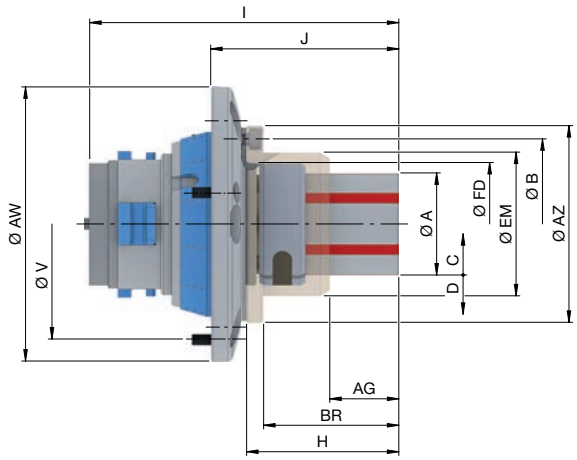

Size		7
Adaptation size		**125**
Clamping range [mm]	A	160 – 190
Run-out ≤ [mm]		0,010
Release stroke in Ø [mm]	C	0,8
Reserve stroke in Ø [mm]	D	0,6
Range / recommended workpiece tolerance [mm]		± 0,5
Max. clamping length [mm]	AG	73
Max. axial drawtube force [pull / push] [kN]		40
Max. radial clamping force [kN]		170
RPM n max. [1/min.]		3200
Reception workpiece end-stop	FD	Ø 192 f7
Bolt hole circle end-stop	B	LK Ø 216 [3 x M8]
End-stop outer Ø [mm]	AZ	234
Depth [mm]	BR	101
End-stop outer Ø 2 [mm]	EM	212
Length [mm]	H	115
Total length [mm]	I	223
Height [mm]	J	145
Bolt hole circle	V	LK Ø 208,5 [6 x M8]
Outer Ø [mm]	AW	234
Weight [kg]		24,3
In stock		✔
Material no.		10001628

Mounting precision for rotating clamping devices: Run-out ≤ 0.005 mm between chuck and adaptation clamping device. Run-out errors on the chuck must also be taken into consideration. Mounting repeatability for stationary clamping devices: ≤ 0.003 mm on the adaptation clamping device.

Please note: SPANNTOP nova 125 is only compatible with MANDO Adapt manufactured in 2015 or later.


Segmented clamping bushings
Page 442


Accessory overview
Page 478

MANDO Adapt T812 RD. Order overview

Size	Clamping range [mm]	Adaptation size	Material no.	In stock	Suitable for	
						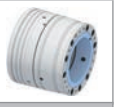
					SPANNTOP mini deadlength Page 72	SPANNTOP nova combi deadlength Page 92
XS	13 – 19	42/52	10000469	-	✔	✔
		65	10000470	-		
		80	10000465	-		
S	16 – 21	42/52	10000461	-	✔	✔
		65	10000471	-		
		80	10000466	-		
0	20 – 28	42/52	10000472	-	✔	✔
		65	10000473	✔		
		80	10000467	-		
1	26 – 38	42/52	10000474	-	✔	✔
		65	10000475	✔		
		80	10000476	-		
2	36 – 54	42/52	10000462	-	✔	✔
		65	10000477	✔		
		80	10000478	-		
3	50 – 80	42/52	10000463	-	✔	✔
		65	10000479	✔		
		80	10000480	-		
4	69 – 100	65	10000481	-	✔	✔
		80	10000468	-		

Detailed technical data follows. Adaptation size 100 upon request.

Scope of delivery

- Adaptation mandrel
- Support sleeve for SAD segmented clamping bushings
- Assembly wrench

MANDO Adapt T812 RD. Technical data

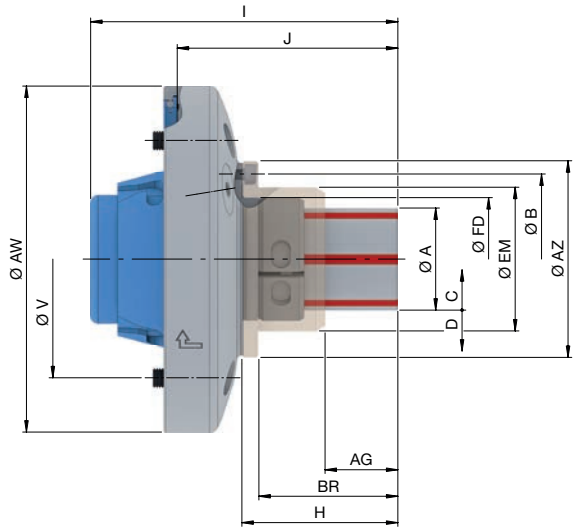

Size		XS		
Adaptation size		**42/52**	**65**	**80**
Clamping range [mm]	A	13 – 19		
Run-out ≤ [mm]		0,025		
Release stroke in Ø [mm]	C	0,4		
Reserve stroke in Ø [mm]	D	0,3		
Range / recommended workpiece tolerance [mm]		± 0,25		
Max. clamping length [mm]	AG	14		
Max. axial compression force [kN]		10		
Max. radial clamping force [kN]		42		
RPM n max. [1/min.]		7000		
Reception workpiece end-stop	FD	Ø 36 f7		
Bolt hole circle end-stop	B	LK Ø 53 [3 x M5]		
End-stop outer Ø [mm]	AZ	65		
Depth [mm]	BR	39,5		
End-stop outer Ø 2 [mm]	EM	42		
Length [mm]	H	47,5		
Total length [mm]	I	124,5	129,5	
Height [mm]	J	83,7		
Bolt hole circle	V	LK Ø 125 [3 x M10]	LK Ø 145 [3 x M10]	LK Ø 160 [3 x M10]
Outer Ø [mm]	AW	166	183	202
Weight [kg]		7	8	10
In stock		-	-	-
Material no.		10000469	10000470	10000465

Mounting precision for rotating clamping devices: Run-out ≤ 0.005 mm between chuck and adaptation clamping device. Run-out errors on the chuck must also be taken into consideration. Mounting repeatability for stationary clamping devices: ≤ 0.003 mm on the adaptation clamping device.


Segmented clamping bushings
Page 442


Adaptation ring
Page 508


Accessory overview
Page 478

MANDO Adapt T812 RD. Technical data

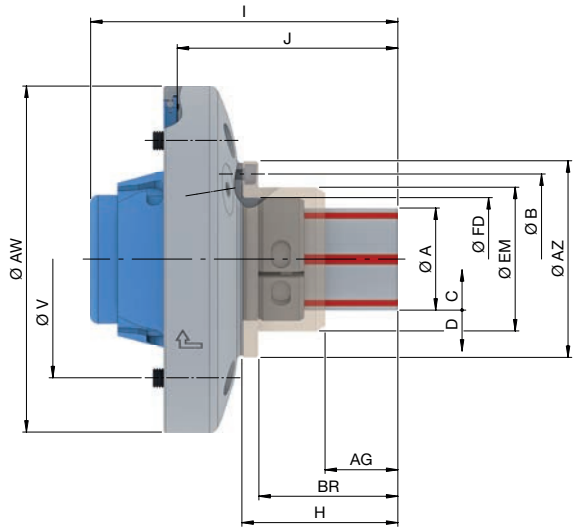

Size		S		
Adaptation size		**42/52**	**65**	**80**
Clamping range [mm]	A	16 – 21		
Run-out ≤ [mm]		0,025		
Release stroke in Ø [mm]	C	0,4		
Reserve stroke in Ø [mm]	D	0,3		
Range / recommended workpiece tolerance [mm]		± 0,25		
Max. clamping length [mm]	AG	15		
Max. axial compression force [kN]		10		
Max. radial clamping force [kN]		42		
RPM n max. [1/min.]		7000	6000	7000
Reception workpiece end-stop	FD	Ø 39 f7		
Bolt hole circle end-stop	B	LK Ø 57 [3 x M5]		
End-stop outer Ø [mm]	AZ	70		
Depth [mm]	BR	41,5		
End-stop outer Ø 2 [mm]	EM	45		
Length [mm]	H	49,5		
Total length [mm]	I	126,5	131,5	
Height [mm]	J	85,7		
Bolt hole circle	V	LK Ø 125 [3 x M10]	LK Ø 145 [3 x M10]	LK Ø 160 [3 x M10]
Outer Ø [mm]	AW	166	183	202
Weight [kg]		7	8	10
In stock		-	-	-
Material no.		10000461	10000471	10000466

Mounting precision for rotating clamping devices: Run-out ≤ 0.005 mm between chuck and adaptation clamping device. Run-out errors on the chuck must also be taken into consideration. Mounting repeatability for stationary clamping devices: ≤ 0.003 mm on the adaptation clamping device.


Segmented clamping bushings
Page 442


Adaptation ring
Page 508


Accessory overview
Page 478

MANDO Adapt T812 RD. Technical data

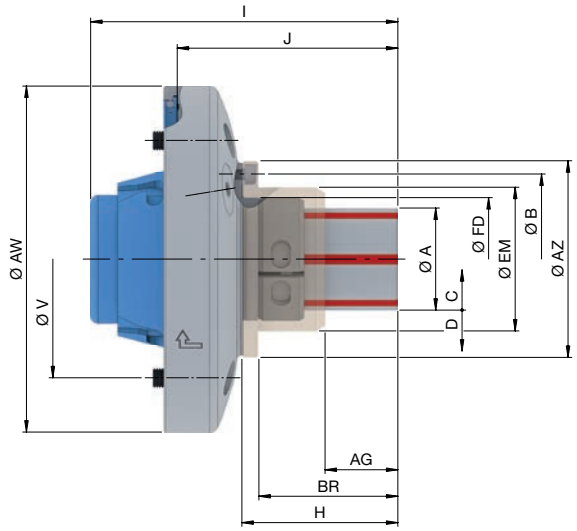

Size		0		
Adaptation size		**42/52**	**65**	**80**
Clamping range [mm]	A	20 – 28		
Run-out ≤ [mm]		0,015		
Release stroke in Ø [mm]	C	0,4		
Reserve stroke in Ø [mm]	D	0,3		
Range / recommended workpiece tolerance [mm]		± 0,25		
Max. clamping length [mm]	AG	21		
Max. axial compression force [kN]		10		
Max. radial clamping force [kN]		42		
RPM n max. [1/min.]		7000	6000	7000
Reception workpiece end-stop	FD	Ø 47 f7		
Bolt hole circle end-stop	B	LK Ø 70 [3 x M6]		
End-stop outer Ø [mm]	AZ	90		
Depth [mm]	BR	51,5		
End-stop outer Ø 2 [mm]	EM	54		
Length [mm]	H	60,5		
Total length [mm]	I	135,5	140,5	
Height [mm]	J	94,7		
Bolt hole circle	V	LK Ø 125 [3 x M10]	LK Ø 145 [3 x M10]	LK Ø 160 [3 x M10]
Outer Ø [mm]	AW	166	183	202
Weight [kg]		8	9	11
In stock		-	✔	-
Material no.		10000472	10000473	10000467

Mounting precision for rotating clamping devices: Run-out ≤ 0.005 mm between chuck and adaptation clamping device. Run-out errors on the chuck must also be taken into consideration. Mounting repeatability for stationary clamping devices: ≤ 0.003 mm on the adaptation clamping device.


Segmented clamping bushings
Page 442


Adaptation ring
Page 508


Accessory overview
Page 478

MANDO Adapt T812 RD. Technical data

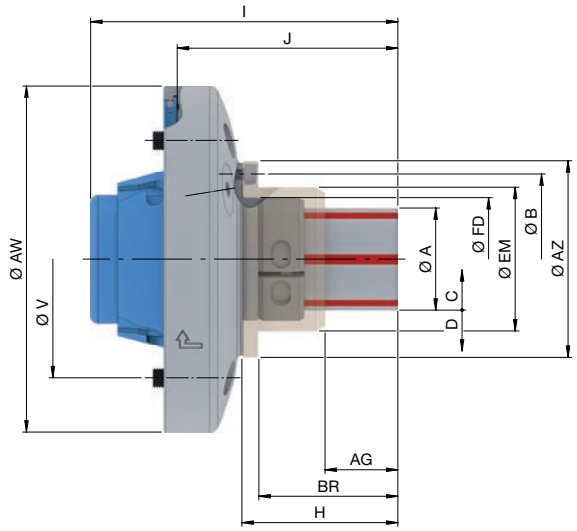

Size		1		
Adaptation size		**42/52**	**65**	**80**
Clamping range [mm]	A	26 – 38		
Run-out ≤ [mm]		0,015		
Release stroke in Ø [mm]	C	0,4	0,5	
Reserve stroke in Ø [mm]	D	0,3	0,4	
Range / recommended workpiece tolerance [mm]		± 0,25	± 0,35	
Max. clamping length [mm]	AG	25		
Max. axial compression force [kN]		10		
Max. radial clamping force [kN]		42		
RPM n max. [1/min.]		7000	6000	7000
Reception workpiece end-stop	FD	Ø 55 f7		
Bolt hole circle end-stop	B	LK Ø 75 [3 x M6]		
End-stop outer Ø [mm]	AZ	90		
Depth [mm]	BR	57,5		
End-stop outer Ø 2 [mm]	EM	62		
Length [mm]	H	66,5		
Total length [mm]	I	140,5	145,5	
Height [mm]	J	99,7		
Bolt hole circle	V	LK Ø 125 [3 x M10]	LK Ø 145 [3 x M10]	LK Ø 160 [3 x M10]
Outer Ø [mm]	AW	166	183	202
Weight [kg]		8	9	11
In stock		-	✔	-
Material no.		10000474	10000475	10000476

Mounting precision for rotating clamping devices: Run-out ≤ 0.005 mm between chuck and adaptation clamping device. Run-out errors on the chuck must also be taken into consideration. Mounting repeatability for stationary clamping devices: ≤ 0.003 mm on the adaptation clamping device.


Segmented clamping bushings
Page 442


Adaptation ring
Page 508


Accessory overview
Page 478

MANDO Adapt T812 RD. Technical data

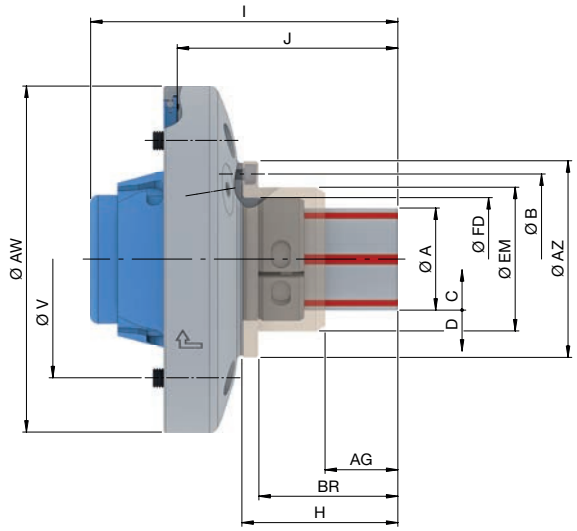

Size		2		
Adaptation size		**42/52**	**65**	**80**
Clamping range [mm]	A	36 – 54		
Run-out ≤ [mm]		0,015		
Release stroke in Ø [mm]	C	0,4	0,5	
Reserve stroke in Ø [mm]	D	0,3	0,4	
Range / recommended workpiece tolerance [mm]		± 0,25	± 0,3	
Max. clamping length [mm]	AG	40		
Max. axial compression force [kN]		20		
Max. radial clamping force [kN]		85		
RPM n max. [1/min.]		7000		
Reception workpiece end-stop	FD	Ø 65 f7		
Bolt hole circle end-stop	B	LK Ø 90 [3 x M6]		
End-stop outer Ø [mm]	AZ	104		
Depth [mm]	BR	73,5		
End-stop outer Ø 2 [mm]	EM	76		
Length [mm]	H	82,5		
Total length [mm]	I	157,5	162,5	
Height [mm]	J	116,7		
Bolt hole circle	V	LK Ø 125 [3 x M10]	LK Ø 145 [3 x M10]	LK Ø 160 [3 x M10]
Outer Ø [mm]	AW	166	183	202
Weight [kg]		9	10	11
In stock		-	✔	-
Material no.		10000462	10000477	10000478

Mounting precision for rotating clamping devices: Run-out ≤ 0.005 mm between chuck and adaptation clamping device. Run-out errors on the chuck must also be taken into consideration. Mounting repeatability for stationary clamping devices: ≤ 0.003 mm on the adaptation clamping device.





Segmented clamping bushings	Adaptation ring	Accessory overview
Page 442	Page 508	Page 478

MANDO Adapt T812 RD. Technical data

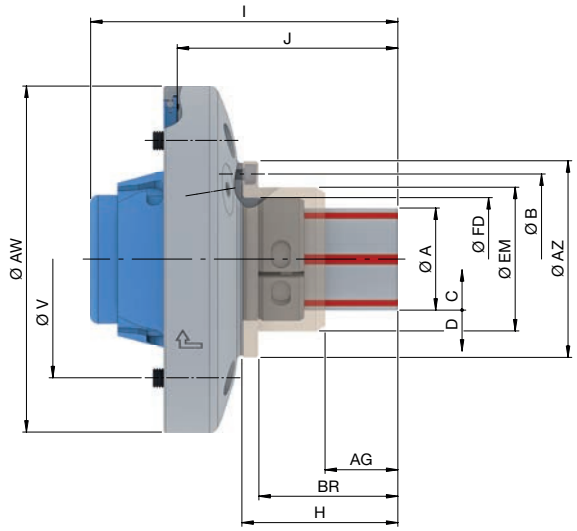

Size		3		
Adaptation size		**42/52**	**65**	**80**
Clamping range [mm]	A	50 – 80		
Run-out ≤ [mm]		0,015		
Release stroke in Ø [mm]	C	0,5		
Reserve stroke in Ø [mm]	D	0,4		
Range / recommended workpiece tolerance [mm]		± 0,35		
Max. clamping length [mm]	AG	44,5		
Max. axial compression force [kN]		25		
Max. radial clamping force [kN]		105		
RPM n max. [1/min.]		6000		5500
Reception workpiece end-stop	FD	Ø 83 f7		
Bolt hole circle end-stop	B	LK Ø 104 [3 x M6]		
End-stop outer Ø [mm]	AZ	120		
Depth [mm]	BR	80,0		
End-stop outer Ø 2 [mm]	EM	105		
Length [mm]	H	89,5		
Total length [mm]	I	164,5	169,5	
Height [mm]	J	123,7		
Bolt hole circle	V	LK Ø 125 [3 x M10]	LK Ø 145 [3 x M10]	LK Ø 160 [3 x M10]
Outer Ø [mm]	AW	166	183	202
Weight [kg]		9	11	12
In stock		-	✔	-
Material no.		10000463	10000479	10000480

Mounting precision for rotating clamping devices: Run-out ≤ 0.005 mm between chuck and adaptation clamping device. Run-out errors on the chuck must also be taken into consideration. Mounting repeatability for stationary clamping devices: ≤ 0.003 mm on the adaptation clamping device.


Segmented clamping bushings
Page 442


Adaptation ring
Page 508


Accessory overview
Page 478

MANDO Adapt T812 RD. Technical data

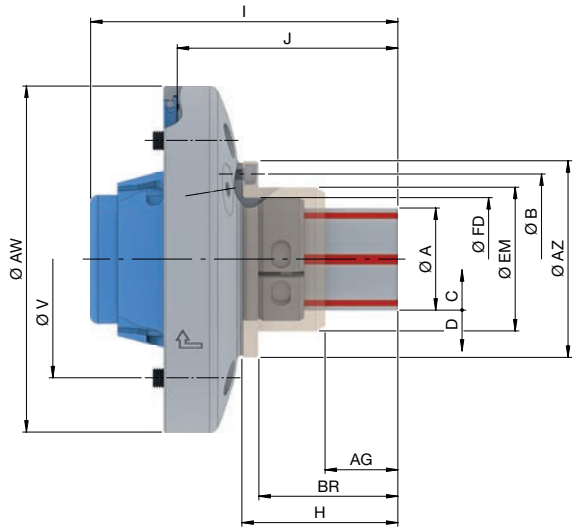

Size		4	
Adaptation size		**65**	**80**
Clamping range [mm]	A	69 – 100	
Run-out ≤ [mm]		0,015	
Release stroke in Ø [mm]	C	0,5	
Reserve stroke in Ø [mm]	D	0,4	
Range / recommended workpiece tolerance [mm]		± 0,35	
Max. clamping length [mm]	AG	52,5	
Max. axial compression force [kN]		35	
Max. radial clamping force [kN]		150	
RPM n max. [1/min.]		6000	
Reception workpiece end-stop	FD	Ø 103 f7	
Bolt hole circle end-stop	B	LK Ø 124 [3 x M6]	
End-stop outer Ø [mm]	AZ	138	
Depth [mm]	BR	90,5	
End-stop outer Ø 2 [mm]	EM	124	
Length [mm]	H	100	99,5
Total length [mm]	I	179,5	
Height [mm]	J	133,7	
Bolt hole circle	V	LK Ø 145 [3 x M10]	LK Ø 160 [3 x M10]
Outer Ø [mm]	AW	183	202
Weight [kg]		12	14
In stock		-	-
Material no.		10000481	10000468

Mounting precision for rotating clamping devices: Run-out ≤ 0.005 mm between chuck and adaptation clamping device. Run-out errors on the chuck must also be taken into consideration. Mounting repeatability for stationary clamping devices: ≤ 0.003 mm on the adaptation clamping device.


Segmented clamping bushings
Page 442


Adaptation ring
Page 508


Accessory overview
Page 478

Jaw modules

Perfect for a large parts spectrum

HAINBUCH SYSTEM

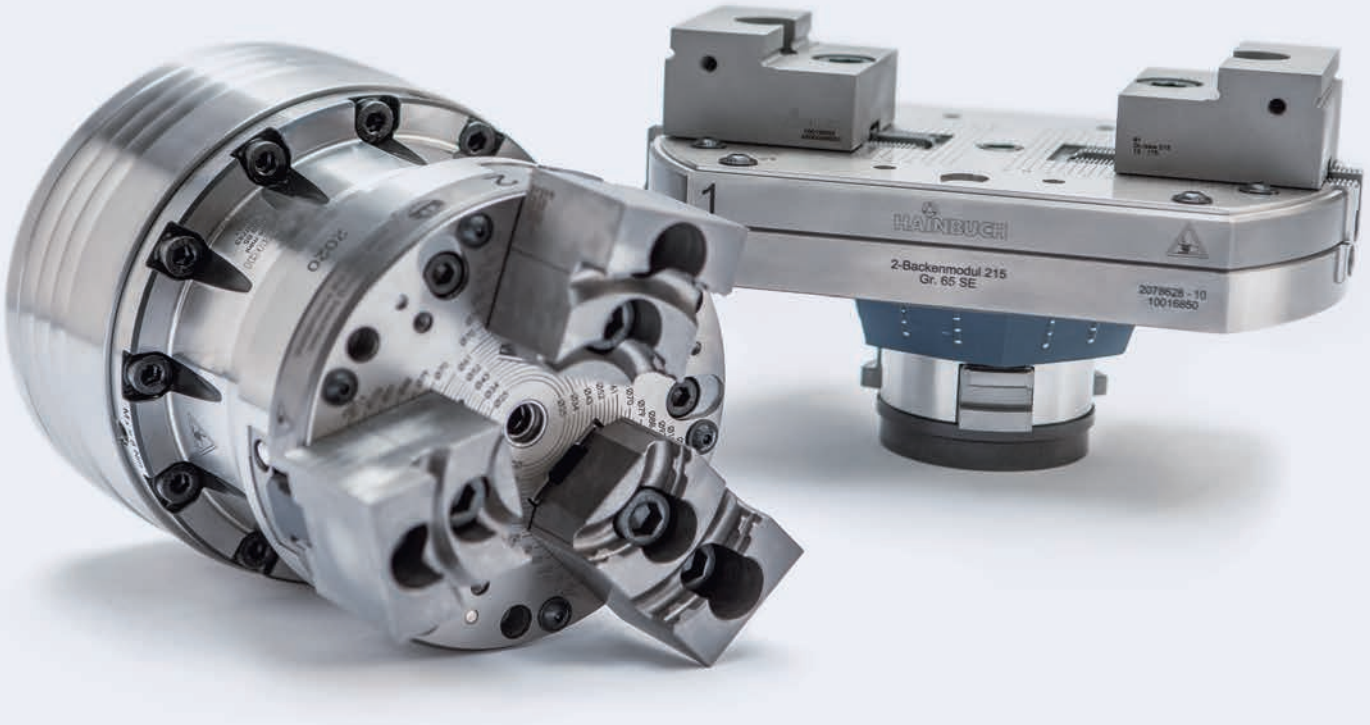

Change over from O.D. clamping to jaw clamping or centric clamping in 2 minutes – without clamping device change-over and without having to align? No problem, with the jaw modules. The basic unit, into which the jaw module is inserted, is a HAINBUCH chuck or stationary chuck. If at times the clamping head reaches its limits because it must clamp a larger area, then use one of the jaw modules.

The 3-jaw module is best suited for round workpieces, and if you have cubic workpieces, then rely on the 2-jaw module. This means that for a large parts spectrum you are completely flexible and always have the solution that is ideally suited for the respective clamping situation.

Both are small, lightweight, and can be quickly changed over – an ingenious solution for small-series production.

Key advantages

- Jaw clamping in the HAINBUCH chuck or stationary chuck
- Extremely fast conversion without detachment of the base clamping device [2 min.]
- Self-centering on the basic clamping device
- Enlarges clamping range of the basic clamping device
- Deadlength clamping without pull-back effect
- Optimal lubrication and resistant to contamination thanks to the lubricating system

Jaw modules at a glance

	3-jaw module	2-jaw module
		
Description	Adaptation for jaw clamping [O.D. clamping]	Adaptation for centric clamping [O.D. clamping]
Sizes	145, 215	215
Clamping range of all sizes [mm]	25 – 209	15 – 209
Variant	SE [hexagonal], RD [round]	SE [hexagonal], RD [round]
Advantages	■ Machining between the jaws is possible [milling or drilling] ■ Handy and lightweight compared to 3-jaw chucks ■ Run-out ≤ 0.020 mm for re-machined soft jaws	■ Can also be used rotating up to 1,500 rpm ■ Handy and lightweight compared to centric clamping vises ■ Clamping repeatability ≤ 0.010 for hard reversible stepped jaws

2-jaw module SE in detail

Designation	
1 Adjustable top jaws with fine serration 2 Assembly and locking mechanism 3 Coupling 4 CENTREX system for µm-precise use without adjustment 5 Master jaw 6 Grease nipple 7 T-slot nut 8 Indicator for the clamping reserve	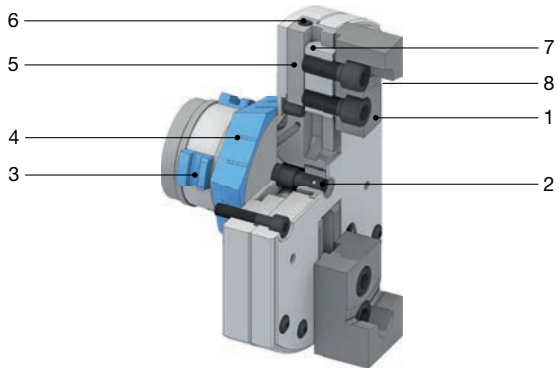

3-jaw module SE in detail

Designation	
1 Adjustable top jaws with fine serration 2 Assembly and locking mechanism 3 Coupling 4 CENTREX system for µm-precise use without adjustment 5 Master jaw 6 Grease nipple 7 T-slot nut 8 Indicator for the clamping reserve	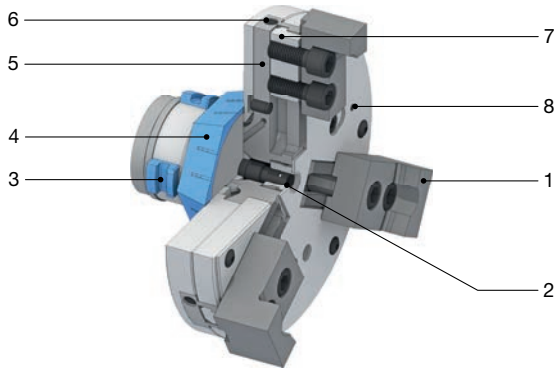

3-jaw module SE. Technical data and order overview

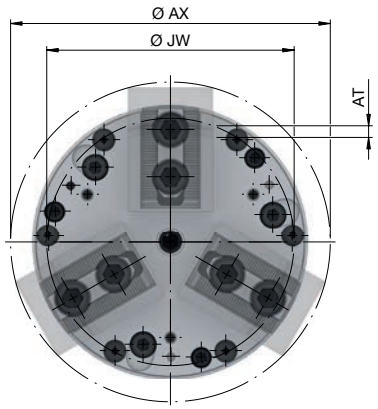

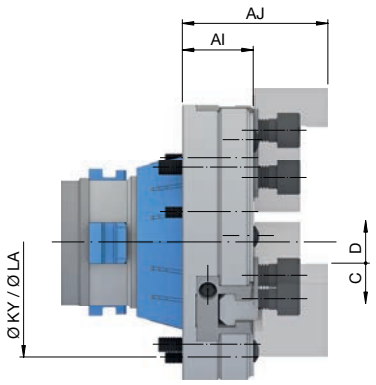

Product line		**SE**		
Adaptation size		**65**		**100**
Size		145	215	
Run-out ≤ [mm]		0,020		
Clamping range [mm]	JW	see overview top jaws		
RPM n max. [1/min.]		5000	3000	
Max. actuating force when boring the jaws [kN]		45		
Max. axial drawtube force [pull / push] [kN]		45		
Max. radial clamping force [kN]		60		
Release stroke in Ø [mm]	C	2,2		5
Reserve stroke in Ø [mm]	D	1,6		2,5
Stroke per jaw [mm]	AT	1,9		3,8
Gear cutting type		1,5 x 60° [serration]		
Swing Ø	AX	~149	~220	
Length without jaws [mm]	AI	37,5		
Length with jaws [mm]	AJ	77		
Bolt hole circle TOPlus mini / premium	KY	LK Ø 112 [3 x M8]		LK Ø 160 [3 x M8]
Bolt hole circle all except TOPlus mini / premium	LA	LK Ø 126 [3 x M6]		LK Ø 180 [3 x M8]
Weight [kg]		6,3	11,3	14,5
In stock		✔	✔	✔
Material no.		10000711	10000712	10000713

Run-out of ≤ 0.020 mm is only ensured with re-machined soft jaws.

Mounting precision for rotating clamping devices: Run-out of 0.005 mm can be achieved between chuck and the adaptation clamping device. Run-out errors on the chuck must be taken into consideration. Mounting repeatability of stationary clamping devices is 0.003 mm on the adaptation clamping device.

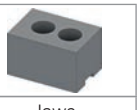
Jaws
Page 472

Scope of delivery

- 3-jaw module
- T-slot nuts
- Storage box

3-jaw module RD. Technical data and order overview

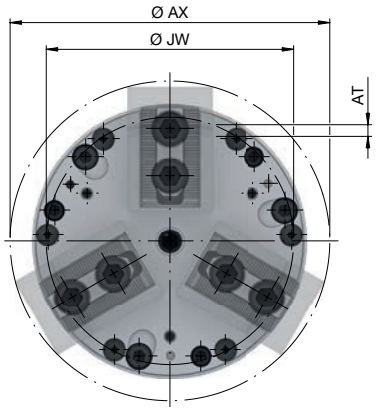

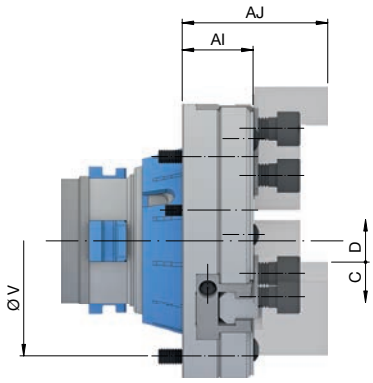

Product line		**RD**			
Adaptation size		**65**		**80**	**100**
Size		145	215		
Run-out ≤ [mm]		0,020			
Clamping range [mm]	JW	see overview top jaws			
RPM n max. [1/min.]		5000	3000		
Max. actuating force when boring the jaws [kN]		45			
Max. axial drawtube force [pull / push] [kN]		45			
Max. radial clamping force [kN]		60			
Release stroke in Ø [mm]	C	2,2			5
Reserve stroke in Ø [mm]	D	1,6			2,5
Stroke per jaw [mm]	AT	1,9			3,8
Gear cutting type		1,5 x 60° [serration]			
Swing Ø	AX	~149	~220		
Length without jaws [mm]	AI	37,5		40	37,5
Length with jaws [mm]	AJ	77		80	77
Bolt hole circle	V	LK Ø 126 [3 x M8]		LK Ø 139 [3 x M8]	LK Ø 180 [3 x M8]
Weight [kg]		6,3	11,3	12,6	14,5
In stock		✔	✔	✔	✔
Material no.		10000718	10000719	10000720	10000721

Run-out ≤ 0.020 mm only applies for re-machined soft jaws.

Mounting precision for rotating clamping devices: Run-out ≤ 0.005 mm between chuck and adaptation clamping device. Run-out errors on the chuck must also be taken into consideration. Mounting repeatability for stationary clamping devices: ≤ 0.003 mm on the adaptation clamping device.

Please note: The adaptation ring is required for use of the jaw module on a SPANNTOP mini chuck.



Jaws
Page 472



Adaptation ring
Page 508

Scope of delivery

- 3-jaw module
- T-slot nuts
- Storage box

2-jaw module SE. Technical data and order overview

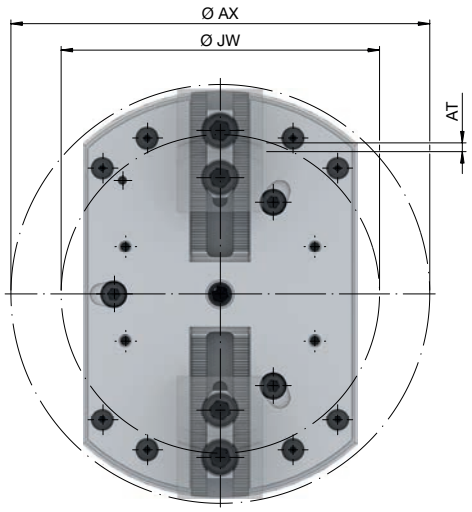

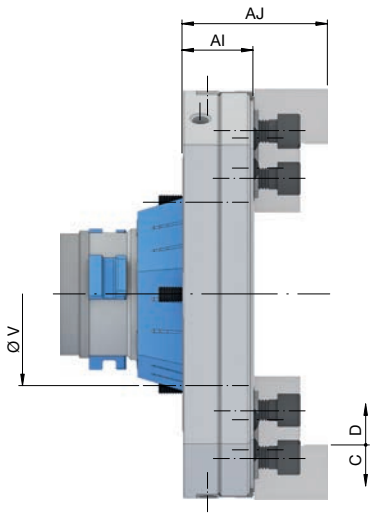

Product line		SE			
Adaptation size		**65**		**100**	
Size		215			
Suitable for		TOPlus mini / premium	all except TOPlus mini / premium		TOPlus mini / premium
Run-out ≤ [mm]		0,020			
Repeatability ≤ [mm]		0,010			
Clamping range [mm]	JW	see overview top jaws			
RPM n max. [1/min.]		1500			
Max. actuating force when boring the jaws [kN]		40			
Max. axial drawtube force [pull / push] [kN]		40			
Max. radial clamping force [kN]		50			
Release stroke in Ø [mm]	C	2,2		5	
Reserve stroke in Ø [mm]	D	1,6		2,5	
Stroke per jaw [mm]	AT	1,9		3,75	
Gear cutting type		1,5 x 60° [serration]			
Swing Ø	AX	220			
Length without jaws [mm]	AI	37,5			
Length with jaws [mm]	AJ	77			
Bolt hole circle	V	LK Ø 112 [3 x M8]	LK Ø 126 [3 x M6]	LK Ø 180 [3 x M8]	LK Ø 160 [3 x M8]
Weight [kg]		10,1	10,2	15,5	
In stock		✔	✔	✔	✔
Material no.		10016842	10016850	10016847	10016848

Run-out ≤ 0.020 mm only applies for re-machined and re-milled jaws.
Clamping repeatability ≤ 0.010 mm for hard reversible stepped jaws:

Mounting precision for rotating clamping devices: Run-out ≤ 0.005 mm between chuck and adaptation clamping device. Run-out errors on the chuck must also be taken into consideration. Mounting repeatability for stationary clamping devices: ≤ 0.003 mm on the adaptation clamping device.

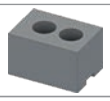

Jaws
Page 472

Scope of delivery

- 2-jaw module
- T-slot nuts
- Storage box

2-jaw module RD. Technical data and order overview

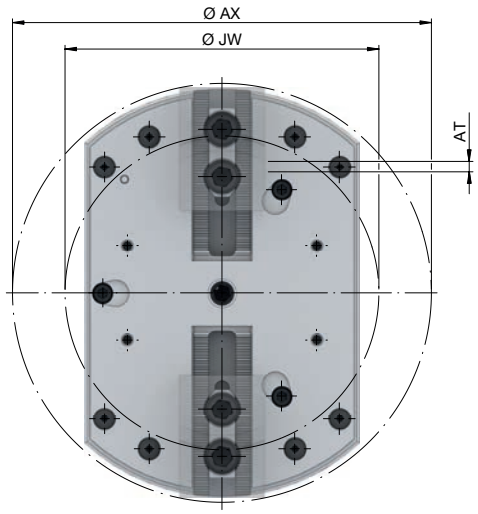

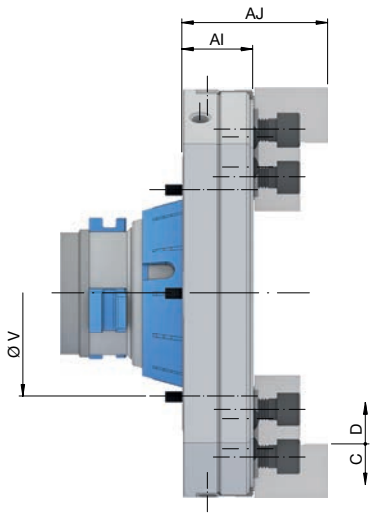

Product line		**RD**		
Adaptation size		**65**	**80**	**100**
Size		215		
Run-out ≤ [mm]		0,020		
Repeatability ≤ [mm]		0,010		
Clamping range [mm]	JW	see overview top jaws		
RPM n max. [1/min.]		1500		
Max. actuating force when boring the jaws [kN]		40		
Max. axial drawtube force [pull / push] [kN]		40		
Max. radial clamping force [kN]		50		
Release stroke in Ø [mm]	C	2,2		5
Reserve stroke in Ø [mm]	D	1,6		2,5
Stroke per jaw [mm]	AT	1,9		3,75
Gear cutting type		1,5 x 60° [serration]		
Swing Ø	AX	220		
Length without jaws [mm]	AI	37,5		
Length with jaws [mm]	AJ	77		
Bolt hole circle	V	LK Ø 126 [3 x M6]	LK Ø 139 [3 x M6]	LK Ø 180 [3 x M8]
Weight [kg]		10,2	11,5	15,6
In stock		✔	✔	✔
Material no.		10016849	10016843	10016846

Run-out ≤ 0.020 mm only applies for re-machined and re-milled jaws.
Clamping repeatability ≤ 0.010 mm for hard reversible stepped jaws:

Mounting precision for rotating clamping devices: Run-out ≤ 0.005 mm between chuck and adaptation clamping device. Run-out errors on the chuck must also be taken into consideration. Mounting repeatability for stationary clamping devices: ≤ 0.003 mm on the adaptation clamping device.

Please note: The adaptation ring is required for use of the jaw module on a SPANNTOP mini chuck.


Jaws
Page 472


Adaptation ring
Page 508

Scope of delivery

- 2-jaw module
- T-slot nuts
- Storage box

Face driver / morse taper adaptation

HAINBUCH SYSTEM



Face driver / morse taper adaptation

Be flexible and machine your workpiece over its entire length between centers with the face driver adaptation. First, this increases run-out precision. Secondly, it shapes and positions tolerances better, and thirdly, it speeds up mounting of the face driver adaptation.

The morse taper adaptation gives you even more flexibility. Whether face driver, fixed center, a manually activated mandrel, or even tools – with this adaptation you can use anything that you can adapt with the morse taper connection. Therefore, you have the possibility of extending your chuck with many additional functions within seconds.

This is made possible by the CENTREX quick change-over interface integrated in both adaptations. This enables mounting of the adaptation without the need for alignment.

Key advantages

- Tremendous flexibility
- Self-centering of the adaptation in the chuck without alignment
- Extremely fast conversion without disassembling the chuck [1 min.]



Face driver adaption on the machine

Face driver / morse taper adaptation

Face driver / morse taper

	Face driver adaptation	Morse taper adaptation
		
Description	Adaptation for clamping between centers	Adaptation to the MK4 reception
Sizes	42, 52, 65, 80, 100	42, 52, 65, 80, 100
Clamping range of all sizes [mm]	–	–
Variant	SE [hexagonal], RD [round]	SE [hexagonal], RD [round]
Advantages	■ Spring-loaded center ■ Hard metal face driver ■ Assembly in 1 minute without alignment	■ Adaptation possibility via morse taper ■ Assembly in 1 minute without alignment ■ Self-centering of the adaptation in the chuck without alignment

Face driver SE in detail

Designation	
1 Hard metal face driver 2 Spring-loaded center 3 Mounting screws 4 CENTREX system for µm-precise use without adjustment	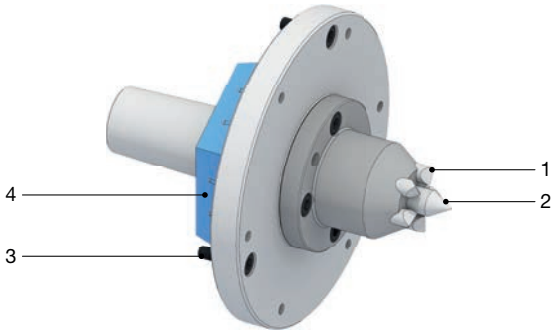

Morse taper adaptation SE in detail

Designation	
1 Morse taper size 4 2 Mounting screws 3 CENTREX system for µm-precise use without adjustment	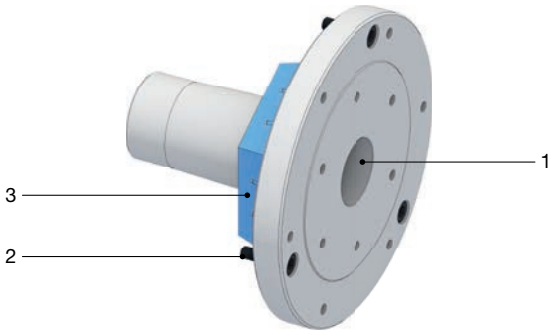

Face driver adaptation SE. Technical data and order overview

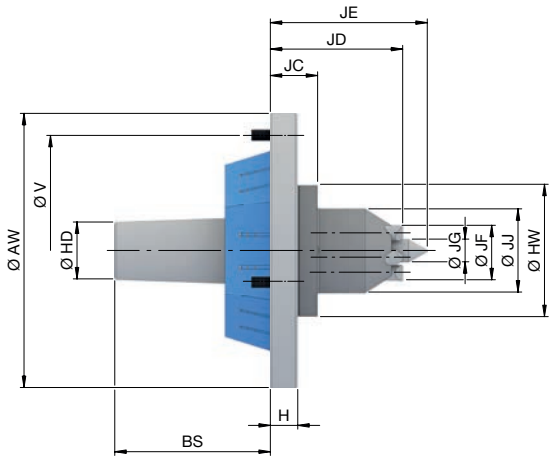

Product line		**SE**					
Size		**52**		**65**		**100**	
Suitable for		TOPlus mini / premium	all except TOPlus mini / premium	TOPlus mini / premium	all except TOPlus mini / premium	TOPlus mini / premium	all except TOPlus mini / premium
Run-out ≤ [mm]		0,010					
RPM n max. [1/min.]		7000		6000		5000	
Length [mm]	H	14,5					
Length 2 [mm]	BS	69,3		82,3		83,3	
Length 3 [mm]	JC	25					
Length 4 [mm]	JD	56		70		81,5	
Length 5 [mm]	JE	63,5		83		101	
Outer Ø [mm]	AW	119	125	129	145	183	215
Outer Ø 2 [mm]	HD	30					
Outer Ø 3 [mm]	HW	52		70		86	
Outer Ø 4 [mm]	JJ	29		44		60	
Driving pin-Ø	JF	20		31		45	
Center-Ø	JG	6		12		20	
Bolt hole circle	V	LK Ø 105 [3 x M8]	LK Ø 107 [3 x M6]	LK Ø 112 [3 x M8]	LK Ø 126 [3 x M6]	LK Ø 160 [3 x M8]	LK Ø 180 [3 x M8]
Weight [kg]		2,3		3,6		7,7	
In stock		-	✔	✔	✔	-	✔
Material no.		10000993	10000603	10000994	10000604	10000995	10000605

Mounting precision for rotating clamping devices: Run-out ≤ 0.005 mm between chuck and adaptation clamping device. Run-out errors on the chuck must also be taken into consideration. Mounting repeatability for stationary clamping devices: ≤ 0.003 mm on the adaptation clamping device.

Morse taper adaptation [MK4] SE. Technical data and order overview

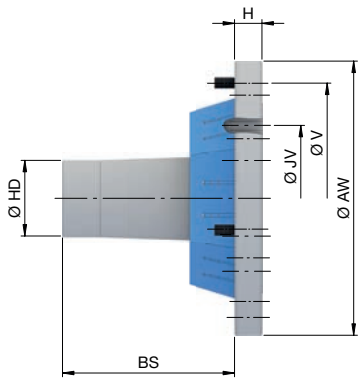

Product line		**SE**					
Size		**52**		**65**		**100**	
Suitable for		TOPlus mini / premium	all except TOPlus mini / premium	TOPlus mini / premium	all except TOPlus mini / premium	TOPlus mini / premium	all except TOPlus mini / premium
Run-out ≤ [mm]		0,010					
RPM n max. [1/min.]		7000		6000		5000	
Length [mm]	H	14,5					
Length 2 [mm]	BS	91					
Outer Ø [mm]	AW	119	125	129	145	183	215
Outer Ø 2 [mm]	HD	40					
Bolt hole circle	V	LK Ø 105 [3 x M8]	LK Ø 107 [3 x M6]	LK Ø 112 [3 x M8]	LK Ø 126 [3 x M6]	LK Ø 160 [3 x M8]	LK Ø 180 [3 x M8]
Bolt hole circle 2	JV	LK Ø 60 [6 x M6]		LK Ø 77 [6 x M6]		LK Ø 80 [6 x M6]	
Weight [kg]		2		2,8		6	
In stock		-	✔	✔	✔	-	✔
Material no.		10000996	10000614	10000997	10000615	10000998	10000616

Mounting precision for rotating clamping devices: Run-out ≤ 0.005 mm between chuck and adaptation clamping device. Run-out errors on the chuck must also be taken into consideration. Mounting repeatability for stationary clamping devices: ≤ 0.003 mm on the adaptation clamping device.

Face driver adaptation RD. Technical data and order overview

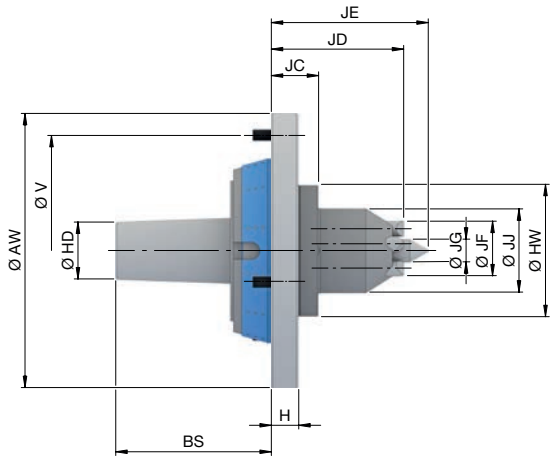

Product line		RD			
Size		**42/52**	**65**	**80**	**100**
Run-out ≤ [mm]		0,010			
RPM n max. [1/min.]		7000	6000	5500	5000
Length [mm]	H	14,5			
Length 2 [mm]	BS	69,3	82,3	83,3	
Length 3 [mm]	JC	25			
Length 4 [mm]	JD	56	70	81,5	
Length 5 [mm]	JE	63,5	83	101	
Outer Ø [mm]	AW	125	145	160	215
Outer Ø 2 [mm]	HD	30			
Outer Ø 3 [mm]	HW	52	70	86	
Outer Ø 4 [mm]	JJ	29	44	60	
Driving pin-Ø	JF	20	31	45	
Center-Ø	JG	6	12	20	
Bolt hole circle	V	LK Ø 107 [3 x M6]	LK Ø 126 [3 x M6]	LK Ø 139 [3 x M6]	LK Ø 180 [3 x M8]
Weight [kg]		2,4	3,4	4,6	6
In stock		✔	✔	✔	✔
Material no.		10000606	10000608	10000609	10000610

Mounting precision for rotating clamping devices: Run-out ≤ 0.005 mm between chuck and adaptation clamping device. Run-out errors on the chuck must also be taken into consideration. Mounting repeatability for stationary clamping devices: ≤ 0.003 mm on the adaptation clamping device.



Adaptation ring
Page 508

Morse taper adaptation [MK4] RD. Technical data and order overview

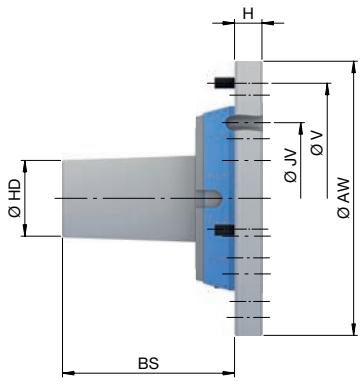

Product line		RD			
Size		**42/52**	**65**	**80**	**100**
Run-out ≤ [mm]		0,010			
RPM n max. [1/min.]		7000	6000	5500	5000
Length [mm]	H	14,5			
Length 2 [mm]	BS	91			
Outer Ø [mm]	AW	125	145	160	215
Outer Ø 2 [mm]	HD	40			
Bolt hole circle	V	LK Ø 107 [3 x M6]	LK Ø 126 [3 x M6]	LK Ø 139 [3 x M6]	LK Ø 180 [3 x M8]
Bolt hole circle 2	JV	LK Ø 60 [6 x M6]	LK Ø 80 [6 x M6]		
Weight [kg]		2	2,7	3,5	5,7
In stock		✔	✔	✔	✔
Material no.		10000617	10000618	10000619	10000620

Mounting precision for rotating clamping devices: Run-out ≤ 0.005 mm between chuck and adaptation clamping device. Run-out errors on the chuck must also be taken into consideration. Mounting repeatability for stationary clamping devices: ≤ 0.003 mm on the adaptation clamping device.


Adaptation ring
Page 508

Magnet module

Magnet module

Adaptation for magnetic clamping

HAINBUCH SYSTEM



Magnet module

In daily use you are optimally equipped with the TOPlus or SPANNTOP chucks. However, there are always components that are difficult to clamp due to the contour, or that will be deformed through radial clamping. So what is required is an axial chuck, which in addition can also be set up very fast.

The answer: the HAINBUCH magnet module. With the magnet module you can clamp components axially on a neodymium magnet. The HAINBUCH magnet module is set up in only 30 seconds. Your basic clamping device is already mounted. You exchange the clamping head that is included in the scope of delivery. When clamping, the magnetic clamping device is pulled onto the flat contact area of your basic clamping device. If, after initial installation, the magnet module is planed flat and the install position is marked, a face change-over accuracy of 2 µm can be achieved. The workpiece itself is clamped by hand on the magnet.

Key advantages

- End face axial clamping via neodymium magnet
- High face-run change-over accuracy
- High holding power of 140 N/cm²
- Assembly in 30 seconds without alignment
- Low maintenance because it is resistant to contamination

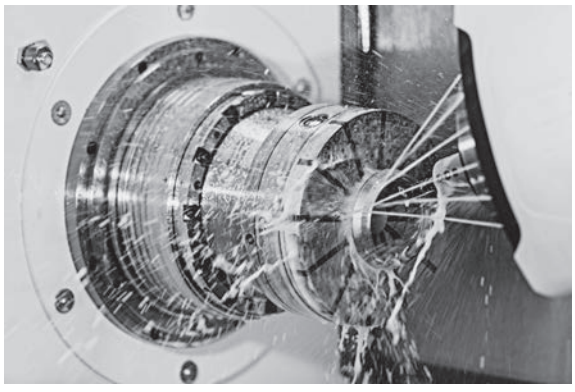

Magnet module in use

Magnet module in detail

Designation	
1 Magnet module 2 Thread for transport lug 3 Actuating screw for the magnet 4 Magnet module clamping head	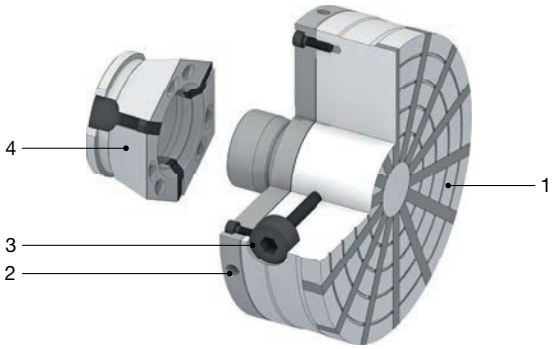

Magnet module starter-set. Technical data and order overview

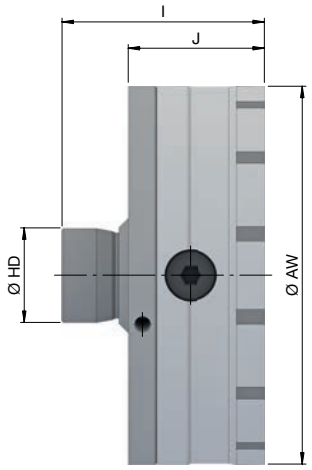

Product line		SE			RD			
Size		**52**	**65**	**100**	**52**	**65**	**80**	**100**
Size – magnet module		200						
Clamping force [N/cm²]		140						
RPM n max. [1/min.]		2500						
Min. draw force axial [kN]		10						
Total length [mm]	I	107						
Height [mm]	J	72						
Outer Ø [mm]	AW	200						
Outer Ø 2 [mm]	HD	50						
Weight [kg]		18						
In stock		✔	✔	✔	✔	✔	✔	✔
Material no.		10001034	10001035	10001036	10001040	10001041	10001042	10001043

Please note: The magnet module is only suitable for modular and pull-back clamping devices.

Scope of delivery

- Magnet module
- Clamping head for magnet module
- Storage box

Clamping head for magnet module. For use of an existing magnet module on a different chuck size.

Product line	Size	In stock	Material no.
SE	52	✔	10001037
	65	✔	10001038
	100	✔	10001039
RD	52	✔	10001044
	65	✔	10001045
	80	✔	10001046
	100	✔	10001047

TESTit

The modular measuring system



TESTit clamping force measuring device

A regular check of the clamping force and draw-in force is imperative for a safe, precise, and productive process. These days no one can afford to manufacture with »theoretical clamping forces/draw-in forces«. Not to mention the fact that DIN EN 1550 requires that static clamping force measurements have to be carried out at regular intervals.

The TESTit modular measuring system measures and logs the clamping force of clamping devices, the draw-in force of tool holders, and much more in zero-point clamping systems.

TESTit consists of two parts: The base unit, which is the IT module, and the measuring units, which are the TEST modules.

You only need the IT module once – regardless of whether you want to measure the clamping force with O.D. clamping or I.D. clamping or the draw-in force. It is so-to-speak the basis. Depending on the measurement application, there are different TEST modules that you can easily connect to the IT module via plug & play. Even special TEST modules fit on the IT module. All aspects have been carefully considered!

With TESTit you do not leave clamping force and draw-in force up to chance; you do prevent workpiece deformation and reduce scrap.



Key advantages

- Clamping force measurement for O.D. and I.D. clamping
- Draw-in force measurement of tool holders [HSK, SK] for zero-point clamping systems and quick change-over systems
- Axial force measurement during service calls / machine maintenance
- Two units, connected with plug & play:
  IT module – only needed 1x,
  TEST module – for various measurement applications
- Can be used rotating [under RPM] and for stationary applications
- Software for visualization and archiving

TESTit clamping force measuring device

TESTit variants

	O.D. clamping 1	O.D. clamping 2/3	I.D. clamping	Draw-in force HTS [hollow tapered shank]
				
Sizes	AS18	AS32, AS65, AS65-30kN, AS65-4	IS28, IS50, IS70	HSK40, HSK50, HSK63, HSK100
Description	Clamping force measurement for O.D. clamping devices with round and smooth clamping surface	Clamping force measurement for O.D. clamping devices with smooth clamping surface	Clamping force measurement for I.D. clamping devices with round and smooth clamping surface	Draw-in force measurement in the tool holder
Use	■ Clamping heads and collets 3-jaw chuck	■ For O.D. clamping 2: Clamping heads and collets / 3-jaw chucks / 2-jaw chucks / vises / centric vises ■ For O.D. clamping 3: 4-jaw chucks / 2x2 chucks / 2-jaw chucks / vises / centric vices	■ Segmented clamping bushings	■ Hollow tapered shank
Applications	Machining center, lathe, multi spindle	Machining center, lathe, multi spindle	Machining center, lathe	Machining center, turning/ milling center



TESTit Software

- 3 options for visualizing the measured results; bar graph, speedometer or line diagram [force / RPM diagram]
- Archive the results as .pdf or .csv file
- Bluetooth® connection for the TESTit devices

TESTit clamping force measuring device

Draw-in force SK	Draw-in force centroteX S / AC	Draw-in force zero-point clamping systems	Axial force mandrel T211	Axial force drawtube
				
SK40	centroteX S / AC	ZP	ZB	ZR
Draw-in force measurement in the tool holder	Draw-in force measurement of the actuation / locking of the centroteX S / AC	Draw-in force measurement in zero-point clamping systems	Axial force measurement of the drawtube via the draw bolt on the mandrel T211	Axial force measurement directly on the drawtube
■ Steep taper	■ centroteX S / AC machine adapter	■ Diverse zero-point clamping systems	■ MANDO / MAXXOS T211 mandrel	■ Machine spindle
Machining center, turning/ milling center	Lathe	Zero-point clamping system	Lathe	Lathe

TESTit clamping force measuring device

TESTit for O.D. clamping in detail

Designation	
1 TEST module AS [measuring unit] 2 IT module [basis unit] 3 Measuring segments [3 x 120° displaceable for O.D. clamping 1/2, 2 x 180° displaceable for 2-jaw measuring for O.D. clamping 2/3 and 4 x 90° displaceable for O.D. clamping 3] 4 USB-outlet for charging of the battery 5 Marking for positioning 6 Chuck with standard clamping head [smooth bore]	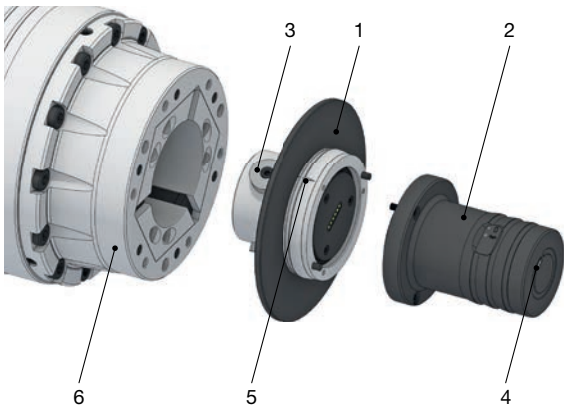

TESTit for I.D. clamping in detail

Designation	
1 TEST module IS [measuring unit] 2 IT module [basis unit] 3 Measuring segments [3 x 120° offset] 4 USB-outlet for charging of the battery 5 Marking for positioning 6 Mandrel with standard segmented clamping bushing [smooth clamping surface]	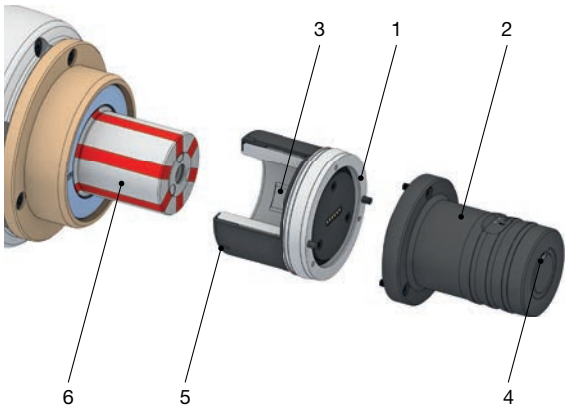

TESTit for draw-in force HTS [hollow tapered shank] in detail

Designation	
1 TEST module HSK [measuring unit] 2 IT module [basis unit] 3 Measuring element 4 USB-outlet for charging of the battery 5 Turret spindle with HTS	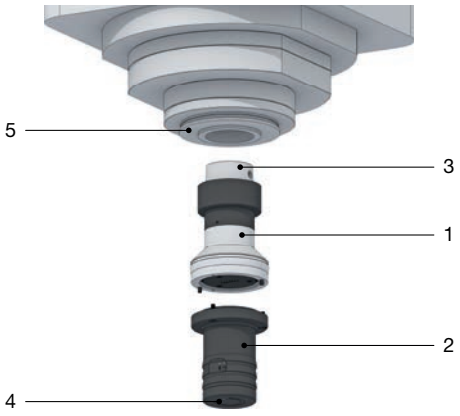

TESTit for draw-in force SK [clamping head] in detail

Designation	
1 TEST module SK [measuring unit] 2 IT module [basis unit] 3 USB-outlet for charging of the battery 4 Measuring element 5 Tool spindle with clamping head reception	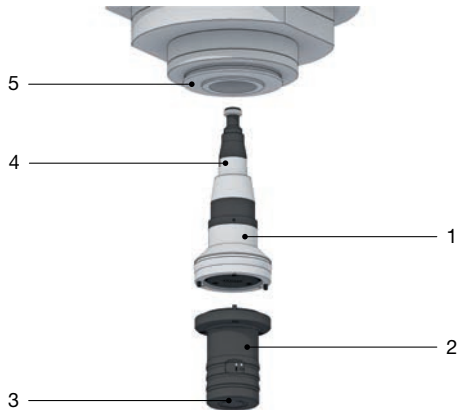

TESTit for draw-in force centroteX S /AC in detail

Designation	
1 TEST module centroteX S / AC [measuring unit] 2 IT module [basis unit] 3 USB-outlet for charging of the battery 4 Measuring element 5 centroteX S machine adapter	

TESTit for draw-in force zero-point clamping systems in detail

Designation	
1 IT module [basis unit] 2 TEST module ZP [measuring unit] 3 Measuring adapter 4 Hydraulic zero-point clamping system 5 USB-outlet for charging of the battery	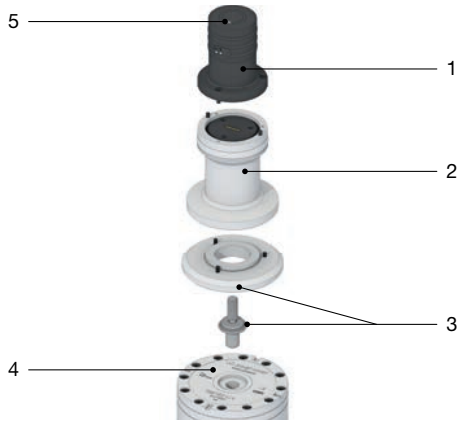

TESTit clamping force measuring device

TESTit for axial force mandrel T211 in detail

Designation	
1 TEST module ZB [measuring unit] 2 IT module [basis unit] 3 USB-outlet for charging of the battery 4 Measuring adapter 5 MANDO T211 mandrel	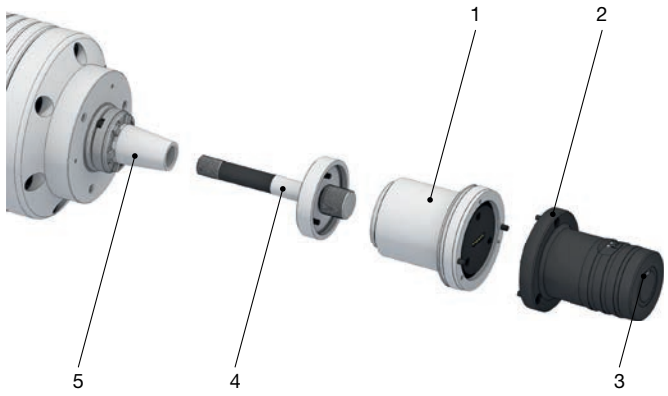

TESTit for axial force drawtube in detail

Designation	
1 TEST module ZR [measuring unit] 2 IT module [basis unit] 3 USB-outlet for charging of the battery 4 Measuring element 5 Flange 6 Threaded adapter for connecting the drawtube with the TESTit	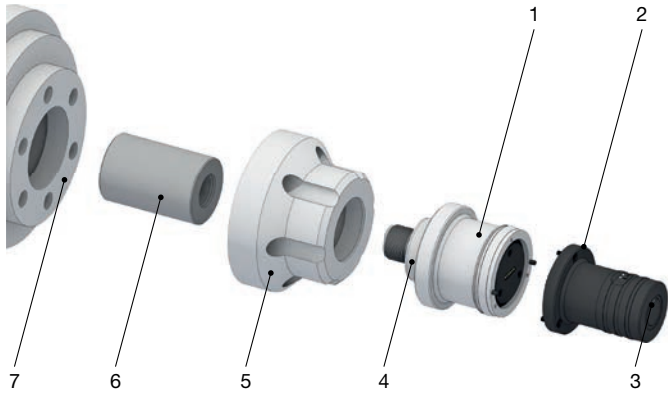

IT module. Technical data

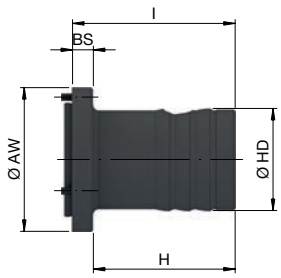

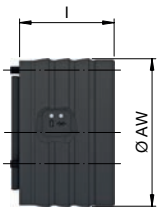

Product variants		Standard		Short model	
Total length [mm]	l	86		50	
Outer Ø [mm]	AW	76		78	
Outer Ø 2 [mm]	HD	54			
Length [mm]	H	75			
Length 2 [mm]	BS	11			
Variant		With display device	Without display device	With display device	Without display device
In stock		✔	✔	-	-
Material no.		10014933	10014934	10017319	10019129

Please note: A TEST module is not included. At least one TEST module is needed for a measurement with TESTit.
System requirements: Operating system Windows 10, version 1709 or higher.

Scope of delivery without display device

- IT module [basic unit], battery operating time approx. 8 h
- Measurement and archiving software [USB-Stick]
- Bluetooth® stick
- Storage case

Scope of delivery with display device

- IT module [basic unit], battery operating time approx. 8 h
- Tablet with 10 inch display
- Measurement and archiving software
- Storage case

TESTit clamping force measuring device

TEST modules for O.D. clamping. Technical data

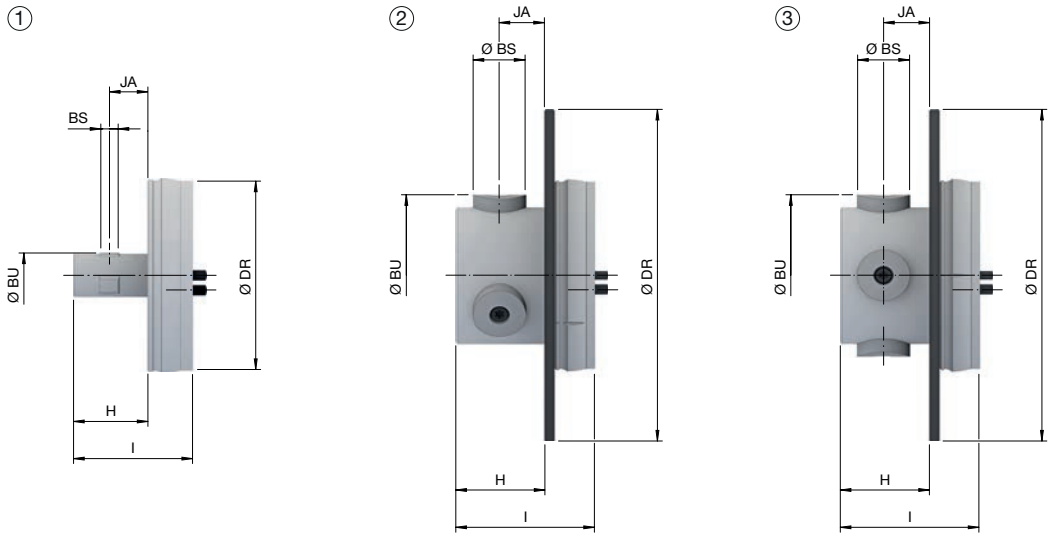

Size		AS18	AS32	AS65	AS65-30kN	AS65-4
Clamping Ø [mm]	BU	18	32	65		
Type		1	2			3
Measuring range attribute [4 measuring points] [kN]						0 – 150
Measuring range attribute [3 measuring points] [kN]		0 – 75	0 – 140	0 – 225	0 - 30	
Measuring range centric [2 measuring points] [kN]			0 – 90	0 – 150	0 - 15	0 – 150
Measurement accuracy of the final value ± [%]		≤ 3				
RPM n max. [1/min.]		10000	8000	6000		
Total length [mm]	l	48		56		
Outer Ø [mm]	DR	76	134			
Length [mm]	H	30	28	36		
Length 2 [mm]	BS	7	14	21		
Distance [mm]	JA	15,5	14,5	18,5		
In stock		✔	✔	✔	✔	✔
Material no.		10014843	10014845	10014846	10017405	10014847

Scope of delivery

- TEST module incl. one set of measuring bolts in the specified clamping diameter [except for AS18]
- Service Pass
- Storage case

Plug gauge

Product	Figure	Suitable for	Clamping Ø [mm]	Application	In stock	Material no.
Plug gauge		AS32	32	For 2-point clamping force measurement	✔	10015181
				For 3-point clamping force measurement	✔	10015184
			42		-	10015185
			52		-	10015187
			65		✔	10015188
		AS65 AS65-30kN		For 3-point and 2-point clamping force measurement	✔	10015190
			80		-	10015191
			100		✔	10015193
			120		✔	10015195
		AS65-4	65	For 4-point and 2-point clamping force measurement	✔	10015197
			120		✔	10015198

TEST modules for I.D. clamping. Technical data

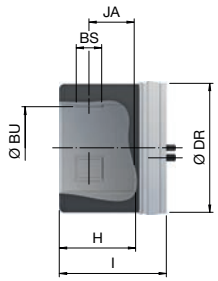

Size		IS28	IS50	IS70
Clamping Ø [mm]	BU	**28**	**50**	**70**
Measuring range attribute [3 measuring points] [kN]		0 – 100	0 – 200	0 – 240
Measurement accuracy of the final value ± [%]		≤ 5		
RPM n max. [1/min.]		7000		6000
Total length [mm]	I	53	63	68
Outer Ø [mm]	DR	76		95,5
Length [mm]	H	35	45	50
Length 2 [mm]	BS	15		19
Distance [mm]	JA	21,5	27,5	30,5
In stock		✔	✔	✔
Material no.		10014840	10014841	10014842

Scope of delivery

- TEST module
- Service Pass
- Storage case

TEST module for draw-in force HTS [hollow tapered shank]. Technical data

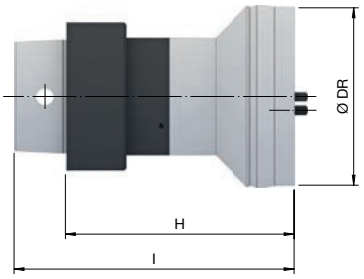

Size		HSK40	HSK50	HSK63	HSK100
Max. measuring range axial [kN]		**20**		**50**	**90**
Measurement accuracy of the final value ± [%]		≤ 3			
Total length [mm]	I	105	115,5	120	188,5
Outer Ø [mm]	DR	76			100
Length [mm]	H	91	98		138,5
In stock		-	-	✔	-
Material no.		10015203	10015204	10014848	10015205

Scope of delivery

- TEST module
- Service Pass
- Storage case

TESTit clamping force measuring device

TEST module for draw-in force SK [clamping head]. Technical data

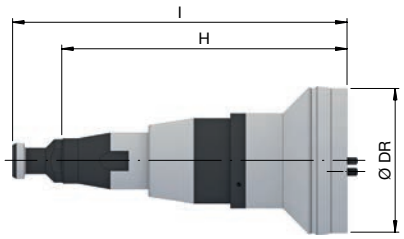

Size		SK40
Max. measuring range axial [kN]		25
Measurement accuracy of the final value ± [%]		≤ 3
Total length [mm]	l	177
Outer Ø [mm]	DR	76
Length [mm]	H	151
In stock		-
Material no.		10019131

Scope of delivery

- TEST module
- Service Pass
- Storage case

TEST module for draw-in force centroteX S / AC. Technical data

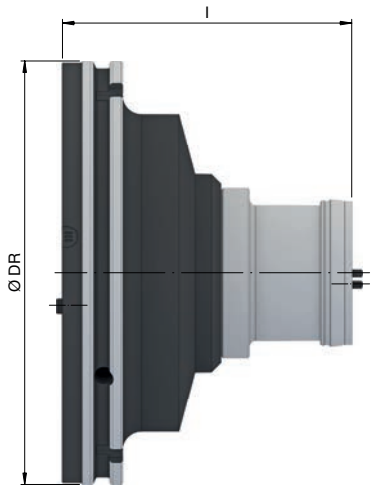

Variant		centroteX S / AC
Max. measuring range axial [kN]		90
Measurement accuracy of the final value ± [%]		≤ 3
Total length [mm]	l	153
Outer Ø [mm]	DR	224
In stock		-
Material no.		10018275

Scope of delivery

- TEST module
- Service Pass
- Storage case

TEST module for zero-point clamping systems. Technical data

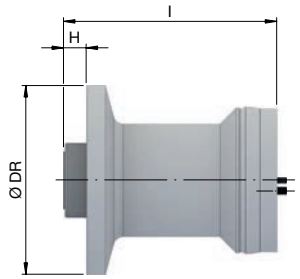

Variant		ZP
Max. measuring range axial [kN]		35
Measurement accuracy of the final value ± [%]		≤ 3
Total length [mm]	l	113
Outer Ø [mm]	DR	100
Length [mm]	H	12
In stock		-
Material no.		10018284

A measuring adapter is also needed [not included].
On request, we can offer a measuring adapter for any zero-point clamping system on the market.

Scope of delivery

- TEST module
- Service Pass
- Storage case

Measuring adapter

Product	Figure	Suitable for	Application	In stock	Material no.
Measuring adapter		TEST Modul ZP	For DockLock safe 20	-	10018730
			For DockLock safe 30	-	10018731
			For DockLock autosafe 30-752170-31 LA	-	10018732
			For DockLock autosafe 30-752170-60 LA	-	10018733
			For DockLock safe 50	-	10018734
			For DockLock airline 755136 LA + airline 755142 + airline 755120	-	10018736

TESTit clamping force measuring device

TEST module for axial force mandrel T211. Technical data

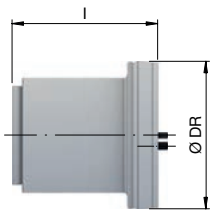

Variant	ZB
Axial measurement range [kN]	**70**
Measurement accuracy of the final value ± [%]	≤ 3
Outer Ø [mm] DR	78
Total length [mm] l	77
In stock	-
Material no.	10018282

You will also need a measuring adapter that fits your mandrel [not included].

Scope of delivery

- TEST module
- Service Pass
- Storage case

Measuring adapter

Product	Figure	Suitable for	Application	Size	In stock	Material no.
Measuring adapter		TEST module ZB	MANDO / MAXXOS mandrel	0, B	-	10019132
				1, C	-	10019133
				2	-	10019134
				3	-	10019135
				4	-	10019036
				5	-	10019136
				6	-	10019137
				7	-	10019138

The measuring adapters are designed to fit the MAXXOS mandrel in size B and C only.

TEST module for axial force drawtube. Technical data

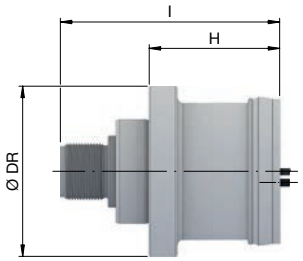

Variant		ZR
Axial measurement range [kN]		**90**
Measurement accuracy of the final value ± [%]		≤ 3
Total length [mm]	l	116
Outer Ø [mm]	DR	90
Length [mm]	H	69
In stock		-
Material no.		10018276

In addition, a threaded adapter and a flange are needed [not included].
On request we can offer a compatible threaded adapter and flange for every spindle.

Scope of delivery

- TEST module
- Service Pass
- Storage case

Automation

Unattended manufacturing & digital monitoring





Automation


IQ clamping devices with integrated measurement intelligence 352


AC [automated change] line 356


Vischer & Bolli Automation 362

Manufacturers who desire cost-effective processes in the future will have no other choice but to automate. This trend will continue to rise, especially in the case of smaller production runs. Machines and equipment must be flexible, and ideally they should automate themselves, as well as autonomously test the quality that they produce. The machine operator only wants to be informed as soon as the process is outside of the defined limits.

Our solutions make all of this possible – culminating in automated change-over of entire clamping devices. Not to mention our clamping devices with integrated electronics. The comprehensive monitoring capabilities of IQ clamping devices eliminate the need for measuring machines. And if you need complete automation concepts for turning, milling, grinding or assembly, we can deliver these as well.

You buy the machine, we do the rest.

IQ chucks & IQ mandrels

with integrated intelligent measuring technology



IQ clamping device with integrated smart measuring functions



Chucks and mandrels with IQ take over the monitoring of production and facilitate work steps. They enable quality control with 100 % good parts, and automated processes detect errors early on so you can take countermeasures.

Integrated sensors enable numerous different measuring and monitoring functions. The measured data is relayed via contactless transmission of data and energy directly to the machine controller where it is analyzed. The controller executes a setpoint comparison. If there are deviations, a message is output or a correction is initiated.

Long-term control is possible with the data obtained through »condition monitoring«. Thus traceability as stipulated in DIN EN 1550 is ensured.

Key advantages

- Clamping and measurement of the workpiece Ø in one step
- Measurement of temperature and RPM of the clamping device
- Automated detection of the workpiece end-stop
- Continuous clamping force monitoring directly on the workpiece

Your benefits

- Reduce measurement procedures
- Prevent scrap
- Increase machine availability and process capability
- Ensure as-needed and status-oriented maintenance intervals
- Monitoring of defined clamping forces
- Document the measurement results



Measuring station

IQ clamping devices with integrated measurement intelligence

IQ clamping devices at a glance

	TOPlus IQ chuck		SPANNTOP IQ chuck		MAXXOS IQ mandrel	MANDO IQ mandrel	
					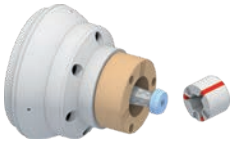	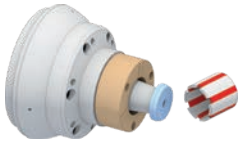	
Variant	**Pull-back**	**Deadlength**	**Pull-back**	**Deadlength**	**T211 pull-back**	**T211 pull-back**	**T212 pull-back**
Variant	SE [hexagonal]		RD [round]		SE [hexagonal]	RD [round]	
Sizes	52, 65, 100		32, 42, 52, 65, 80, 100, 125, 160		A, B, C, D, E, F	0, 1, 2, 3, 4, 5, 6, 7	XXS, XS, S, 0, 1, 2, 3, 4, 5, 6, 7
Clamping range of all sizes [mm]	3 – 100		3 – 160		18 – 100	20 – 200	8 – 190
Actuation	Pull	Push	Pull	Push	Pull	Pull	
Clamping elements	Standard clamping head SE		Standard clamping head RD		Standard segmented clamping bushing SE	Standard segmented clamping bushing RD	
Adaptations	Can be used, however without IQ function				No adaptations available		
Applications	Lathe, vertical lathe, milling machine, machining center, grinding machine, measuring machine, assembly workstation						
Use	Clamping of raw material, clamping of finished material, measuring, final inspection						
Measurement parameters							
Workpiece Ø	✔	✔	✔	✔	✔	✔	
Temperature	✔	✔	✔	✔	✔	✔	
RPM	✔	✔	✔	✔	✔	✔	
Workpiece contact	✔		✔		✔	✔	
Workpiece clamping force	✔	✔					

HAINBUCH scope of delivery

- IQ clamping device
- Modulator for the communication between clamping device and machine [machine controller]
- Register description for parameterization of the industrial fieldbus system

Integration tasks of the machine builder

- Adapt software for control of the machine cycle
- Provide the input and output required on the machine side
- Visualize the measured values and interaction buttons on the user interface

Transmission of data and energy

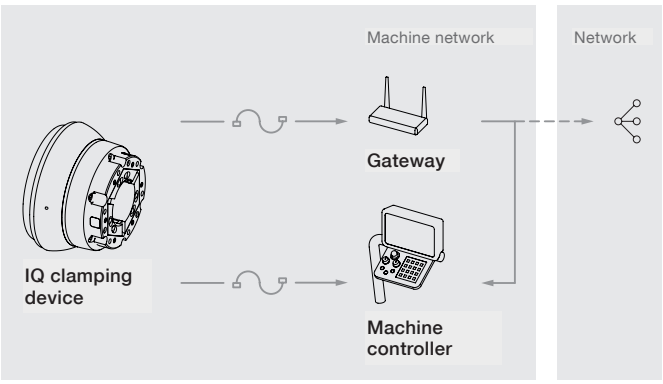

Touchless transmission of data and energy between the rotating clamping device and the stator fi xed on the headstock.

The data can be transmitted with a fi eldbus system [e.g. PROFINET] directly to the machine controller or to a gateway.

IQ clamping devices in detail

Designation	
1 Stator on the fixed headstock 2 Touchless, inductive transmission of data and energy 3 TOPlus IQ chuck 4 Workpiece end-stop TOPlus IQ chuck with 3-point part support contact for air-sensing control 5 Standard clamping head 6 Standard segmented clamping bushing 7 Workpiece end-stop MANDO IQ mandrel with 3-point part support contact for air-sensing control 8 MANDO IQ mandrel	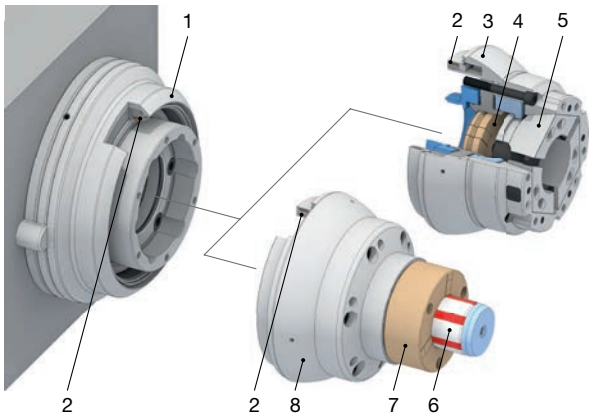

Measuring and monitoring possibilities

Workpiece diameter
- Clamping and measuring in one step – without additional measuring machine [»inline measuring«]
- Accuracy: in Ø ≤ ± 0.01 mm

Application example: Detects whether the correct diameter was produced in the upstream machining.

Temperature
- Measuring of the temperature of the clamping device
- Accuracy: ± 1 °C

Application example: Detects a gradual temperature change, triggered by the machining process, which can be taken into account for measuring procedures.

RPM
- Measuring the RPMs of the clamping device
- Accuracy: ± 1 %

Application example: Ideal for »condition monitoring« for preparation of RPM-based analysis diagrams, detecting inertia losses.

Workpiece contact
- Detects the workpiece contact through sensors in the basic body and through the 3-point part support contact on the workpiece end-stop
- Minimum thickness of foreign objects: ≥ 0.03 mm

Application example: Detects chips on the workpiece end-stop without complex air sensing control with rotary unit and piping.

Workpiece clamping force
- Continuous clamping force monitoring directly on the workpiece
- Deviation from a calibrated clamping force value is determined [not an absolute measurement]

Application example: Detects whether clamping force that is suitable for the workpiece has been set on the hydraulic unit/clamping cylinder – this is the prerequisite for automated manufacturing of different workpieces.

In addition, analysis of the clamping force measurement data enables reliable-process manufacturing and is an important component of maintenance as-needed.

AC [automated change] line

for automated set-up of workholding technology

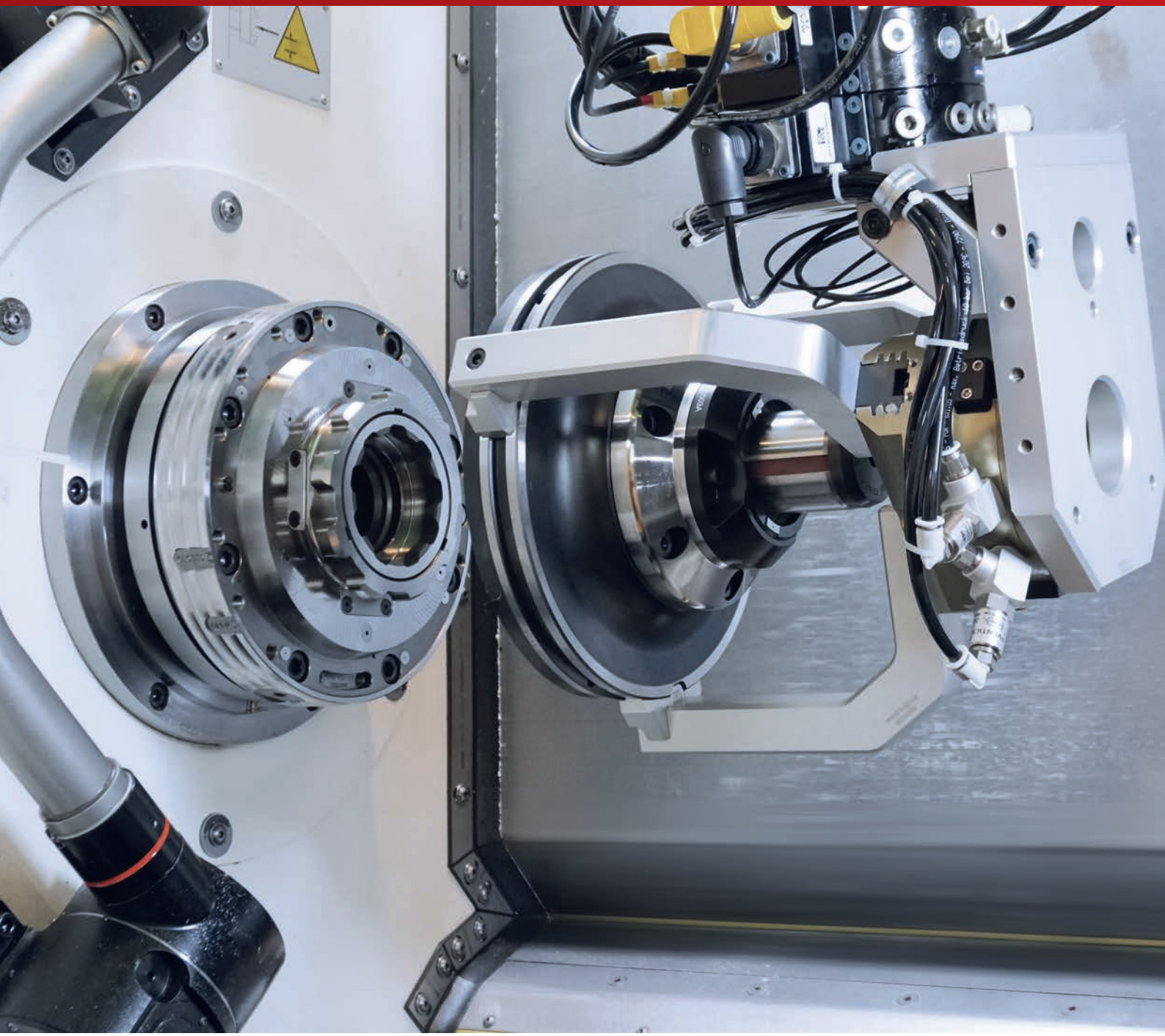

AC [automated change] Line

Smart automated processes are everywhere, whether in everyday life or in production facilities. The increasing individualization of products, culminating in efficient one-off production, necessitates rethinking in manufacturing planning. Machines and systems have to be flexible and they must be designed for automated set-up. That is where our automation solutions come into play. They increase the machine runtime and allow automated set-up, to reduce your costs.

Our TOPlus AC and SPANNTOP AC chucks allow automatic change-over of clamping heads and workpiece end-stops. This enables unattended set-up and manufacturing of workpieces with different clamping diameters, profiles and lengths.

If you wish to change entire clamping devices, however, you can use our CENTREX duo AC and centroteX AC interfaces. We can custom tailor them to your individual requirements.

Key advantages

- Automated changing of clamping heads with or without a workpiece end-stop
- Automated changing of mandrels and chucks
- Reliable processes, successfully used by numerous customers
- Flexible and efficient, even in one-off production

Your benefits

- Improved quality and assurance of consistent results
- Increased productivity, as unattended manufacturing is possible

centroteX AC in action

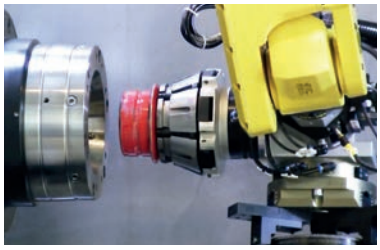




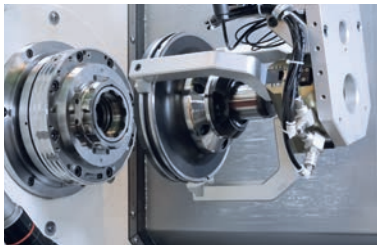

Photo credits [left to right]: Photo 1 HAINBUCH GMBH, Photo 2 BIS Specials BV, Photo 3 OKUMA EUROPE GMBH, Photo 4 HAINBUCH GMBH, Photo 5 Robojob GMBH, Photo 6 HAINBUCH GMBH

AC [automated change] Line



Combined clamping head and workpiece end-stop change-over

with TOPlus AC or SPANNTOP AC

- Power-operated chuck with integrated interface for changing clamping head and workpiece end-stop together
- For machines with a horizontal or vertical rotating spindle
- Also for stationary use [machining center, measuring machine, …]

Technical requirements

- Power-operated clamping device under tension and pressure
- Clamping cylinder with through-bore for passage of at least two media required [cooling lubricant, air sensoring]
- Due to media supply, no capacity for the workpiece is possible
- Programmable clamping pressure [e.g. proportional valve] recommended

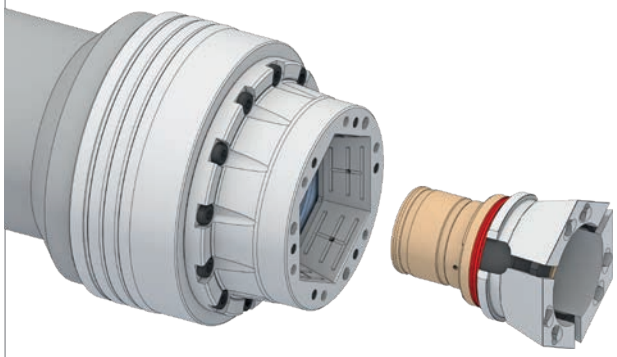

Result

- Automated set-up of different clamping diameters and clamping lengths in one set-up process
- Set-up of the clamping head with the workpiece end-stop eliminates one set-up process
- Same run-out and production accuracy as TOPlus and SPANNTOP chucks

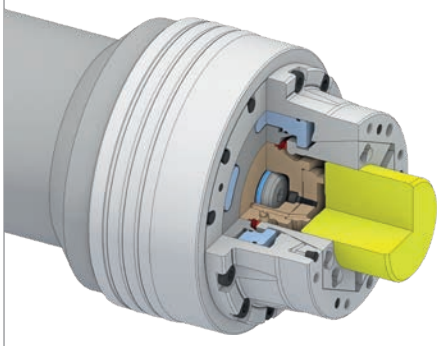

SAVINGS

- Higher machine utilization, since unattended shifts can be implemented with high process reliability
- No personnel required for set-up

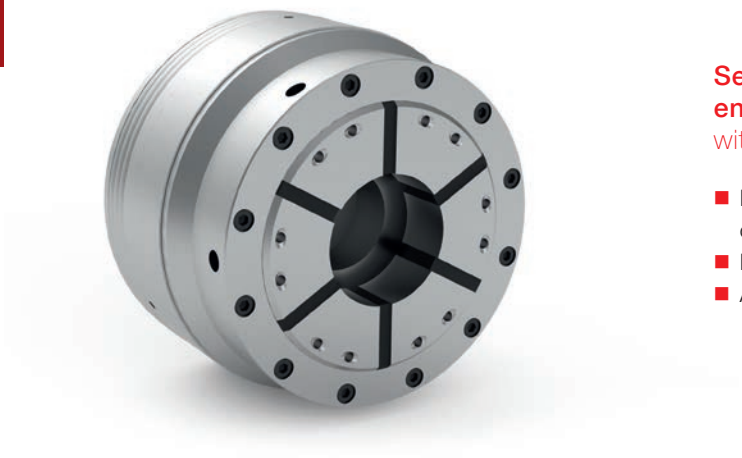

Separate clamping head and workpiece end-stop change-over
with TOPlus AC or SPANNTOP AC

- Power-operated chuck with integrated interface for changing clamping head and workpiece end-stop separately
- For machines with a horizontal or vertical rotating spindle
- Also for stationary use [machining center, measuring machine, …]

Technical requirements

- Power-operated clamping device under tension and pressure
- Double-piston clamping cylinder with double media passage [cooling lubricant, air sensoring] for actuation of the base end-stop and the clamping head is required
- Clamping diameter must be larger than the end-stop diameter or the end-stop plane must be behind the clamping head
- Programmable clamping pressure [e.g. proportional valve] recommended

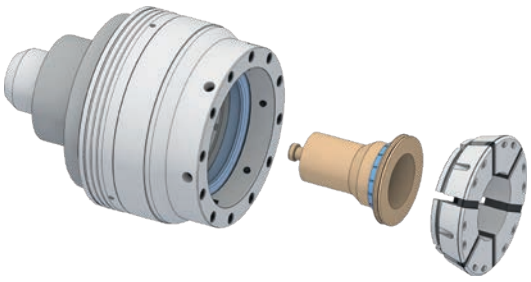

Result

- Automated set-up of different clamping diameters and clamping lengths in two separate set-up processes
- Workpiece families with different clamping diameters often need no changing of end-stop, which greatly reduces stocking of changing parts
- Same run-out and production accuracy as TOPlus and SPANNTOP chucks

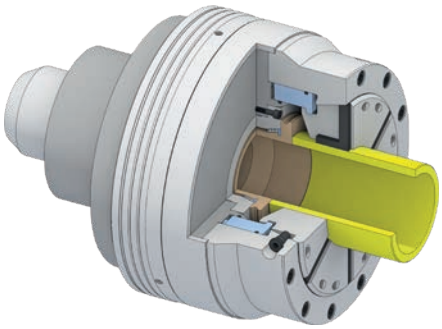

SAVINGS

- Higher machine utilization, since unattended shifts can be implemented with high process reliability
- No personnel required for set-up
- Smaller robots are possible due to the lower load

AC [automated change] Line



Mandrel change-over [MAXXOS und MANDO]
with CENTREX duo AC

- CENTREX duo AC interface for automated changing of pre-setup MAXXOS and MANDO mandrels
- For machines with a horizontal or vertical rotating spindle
- Also for stationary use [machining center, measuring machine, …]

Technical requirements

- Power-operated clamping device under tension
- Double-piston clamping cylinder, with position measuring system for passage of two media [2 x air sensoring] for mounting of the mandrel on the spindle is required
- Programmable clamping pressure [e.g. proportional valve] required

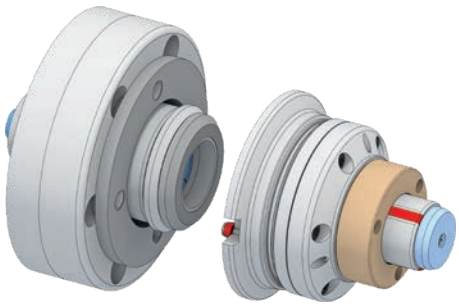

Result

- Automated changing of pre-setup mandrels
- Segmented clamping bushing and end-stop are pre-setup separately outside of the machine
- Different mandrel sizes can be used, therefore ideal for small and large workpieces
- Same run-out and manufacturing accuracy as the mandrels used, plus change-over accuracy of the CENTREX duo AC interface [≤ 0.003 mm]

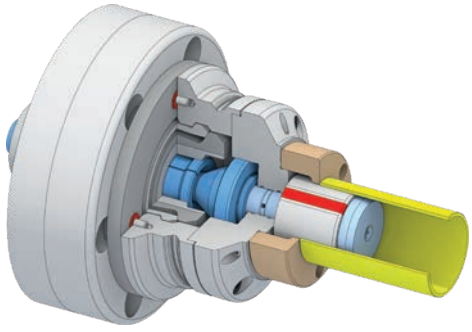

SAVINGS

- Higher machine utilization, since unattended shifts can be implemented with high process reliability
- Personnel required only for external preliminary set-up, allowing simultaneous operation of multiple machines



Clamping device change-over
with centroteX AC

- centroteX AC interface for automated changing of pre-setup chucks and mandrels
- For machines with a horizontal or vertical rotating spindle
- Clamping device mounting via bayonet mechanism using mechanical actuator [e.g. screwdriver or wrench]

Technical requirements

- Power-operated clamping device under tension and pressure
- Maximum clamping device outer diameter 224 mm [TOPlus and SPANNTOP up to max. size 65]
- Clamping cylinder with through-bore, with position measuring system for passage of four media [cooling lubricant, 2 x air sensoring, 1 x air purge] is required
- Programmable clamping pressure [e.g. proportional valve] required



Result

- Automated changing of complete, different clamping devices, therefore ideal for different workpieces
- Changing parts can be pre-setup on the machine or separately outside of the machine
- Same run-out and manufacturing accuracy as the clamping devices used, plus change-over accuracy of the centroteX AC interface [≤ 0.003 mm]



SAVINGS

- Custom one-off manufacturing of different workpieces with minimal set-up expenditure is possible, with no manual intervention
- Higher machine utilization, since unattended shifts can be implemented with high process reliability
- Personnel required only for external preliminary set-up, allowing simultaneous operation of multiple machines

Vischer & Bolli Automation

You buy the machine, we do the rest.

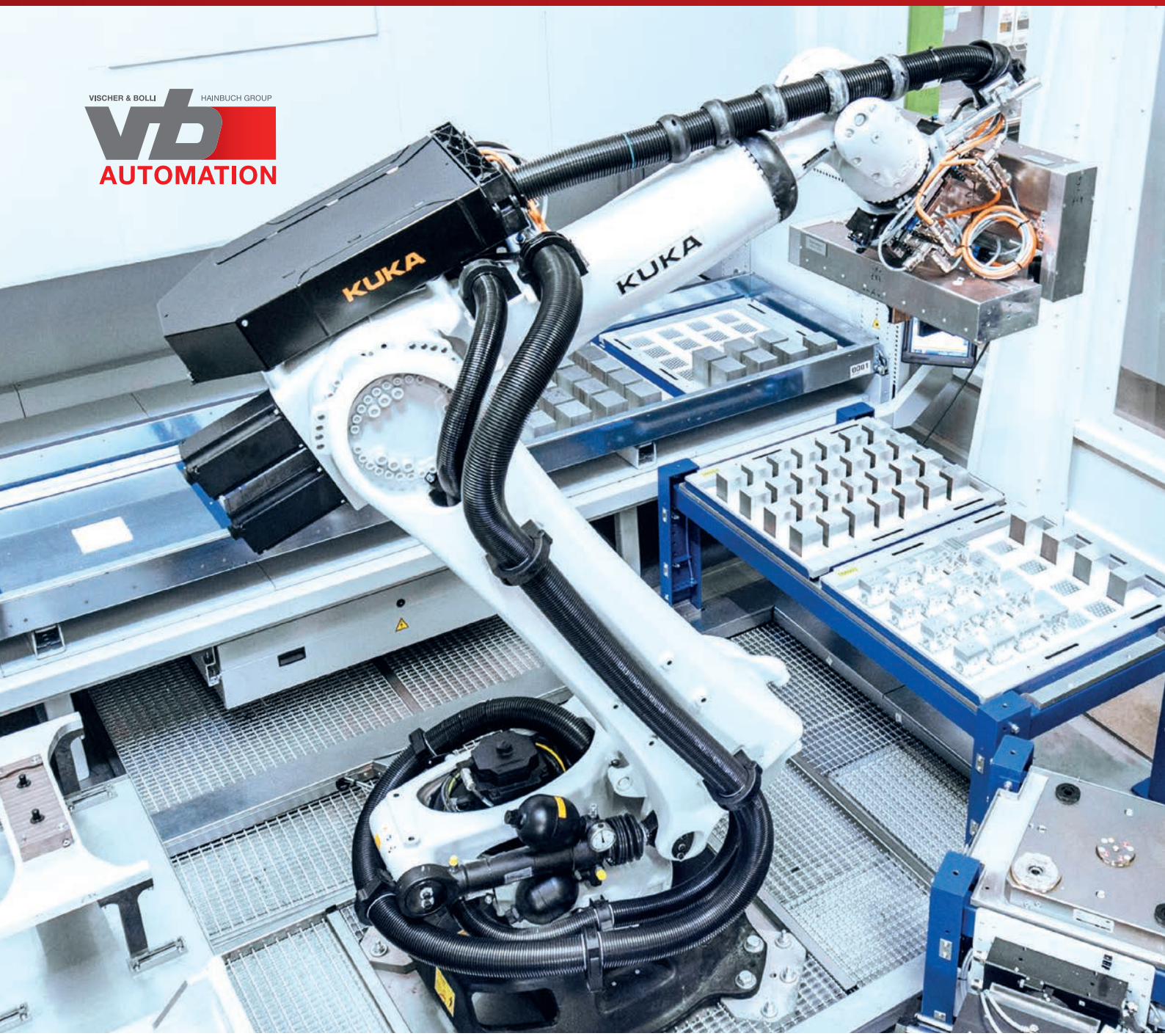



Vischer & Bolli Automation [VBA], one of our subsidiaries since October 2020, specializes in the automation of complete manufacturing cells – with more than 20 years of experience.

VBA develops overall automation concepts for milling, turning, grinding and assembly, providing support from the very beginning. You get everything from a single source – from the clamping device, robot cell, mounting fixture and grippers to the storage solution, sensors and software.

In other words: You buy the machine, VBA does the rest.

VBA attaches great importance to smooth processes, maximum functionality and productivity at a fair price. An extensive partner and service network allows them to offer everything from a single source in order to optimally fulfill customer requirements. No matter how complex and technically challenging the task may seem – VBA is certain to have a solution at the ready. Extremely important: Sustainable implementation of projects for both the customer and the environment.

VBA also shows you how you can integrate additional automated processes such as measuring, cleaning and deburring.

Capabilities

- Unattended 24/7 or > 48 hour manufacturing
- Handling weights from 10 grams to 3 tons
- Automated changing of fixtures, workpieces and tools even in one-off production
- Connection to any machine tool, as well as integration of peripheral equipment, such as lift systems, measuring machines, deburring stations, labeling systems, cleaning equipment, etc.
- Master computer software available in all development stages, as well as connection to an ERP system

Your benefits

- Cost-effective solutions thanks to a modular concept
- Improved product quality as a result of consistent and repeatable processes
- Full utilization of your machines
- Reduction of your labor costs
- Potential cost reductions of € 200,000 per year or more

Contact
Vischer & Bolli Automation GmbH | Heuriedweg 34 | DE-88131 Lindau
Phone +49 8382 96 19-0 | verkauf@vb-automation.com | www.vb-automation.com

Overview

Find what's important fast



Quick change-over systems

	centroteX / mandoteX	366
	CENTREX duo	398

Quick change-over

High speed clamping device change-over



centroteX and mandoteX — ideal for today's highpaced manufacturing environment!

It is feasible to equip the HAINBUCH quick change-over systems on all your machines, giving you the advantage of changing clamping devices in a matter of minutes, thus earning money quicker. This is because these set-up devices allow you to manufacture with job orientation. And, thanks to our unique CENTREX technology, you will achieve a repeatability of ≤ 0.003 mm on the interface.

However, our high speed solutions have even more to offer: As you will experience shorter machine downtimes along with reduced processing and throughput times, your quick change-over systems will pay off in no time. Better yet, you will not have to compromise on quality, rigidity or precision.

Select the spindle connection and the clamping device that is right for you from our extensive assortment. We can even accommodate you if you are already using clamping devices made by other manufacturers. We will simply adapt them to our interface. How people are manufacturing today!

Get the competitive advantages of quick change-over.

Key advantages

- Clamping device quick change-over system
- Enormous reduction in clamping device change-over times
- Repeatability between machine adapter and clamping device adapter ≤ 0.003 mm – without alignment
- Machine-overlapping utilization of clamping devices
- Power actuation or fluid actuation of the clamping devices are possible
- The Monteq mounting aid for easier handling and optimal change-over accuracy



centroteX S in use

Quick change-over systems in overview

	centroteX S	centroteX M	mandoteX
			
Description	One of the smallest standardized quick change-over interface on the market – particularly for small spindles	Standardized quick change-over interface with an extensive assortment of clamping devices	Standardized quick change-over interface especially for mandrels
Change-over time	Approx. 1 min.	Approx. 5 min.	Approx. 1 min.
Application	■ Lathes and grinding machines up to a through-hole capacity of 52 mm ■ Vertical lathes	■ Lathes up to a through-hole capacity of 110 mm	■ Lathes and grinding machines
Spindle nose	A2-5, A2-6, AP140, AP170	A2-6, A2-8, AP170, AP220	A2-5, A2-6, A2-8, AP140, AP170
Locking	Radial	Axial	Axial
Drawtube connection	Bayonet coupling	Bayonet coupling	Bayonet coupling
Max. clamping device Ø	224 mm	315 mm	139 mm
Max. RPM	Determined by clamping device	Determined by clamping device	Determined by mandrel
Actuation	Draw / pressure	Draw / pressure	Draw
Suitable for	■ TOPlus mini chuck ■ TOPlus premium chuck ■ SPANNTOP mini chuck ■ 3-jaw chuck B-Top ■ 4-jaw chuck InoFlex VT-S ■ Mandrel MANDO T211 ■ Mandrel MANDO T212 ■ Mandrel MANDO T812 ■ Mandrel MAXXOS T211 ■ Third-party clamping devices [weight ≤ 28 kg, stroke ≤ 26 mm, actuating force ≤ 48 kN]	■ TOPlus mini chuck ■ TOPlus chuck ■ SPANNTOP mini chuck ■ SPANNTOP nova chuck ■ 3-jaw chuck B-Top ■ 4-jaw chuck InoFlex VT-S ■ Mandrel MANDO T211 ■ Mandrel MANDO T212 ■ Mandrel MANDO T812 ■ Mandrel MAXXOS T211 ■ Third-party clamping devices [weight ≤ 100 kg, stroke ≤ 28 mm, actuating force ≤ 65 kN]	■ Mandrel MANDO T211 ■ Mandrel MANDO T212 ■ Mandrel MANDO T812 ■ Mandrel MAXXOS T211
Advantages	■ In stock ■ Large selection of standard clamping devices ■ Extra fast change-over	■ In stock ■ Large selection of standard clamping devices ■ Extra rigid design	■ In stock ■ Large selection of standard clamping devices ■ Extra affordable
	Page 372	Page 382	Page 392

centroteX S in detail

Designation	
1 Clamping device 2 Bayonet coupling 3 One radial quick-acting screw 4 Machine adapter 5 CENTREX system for µm-precise use without adjustment 6 Clamping device adapter	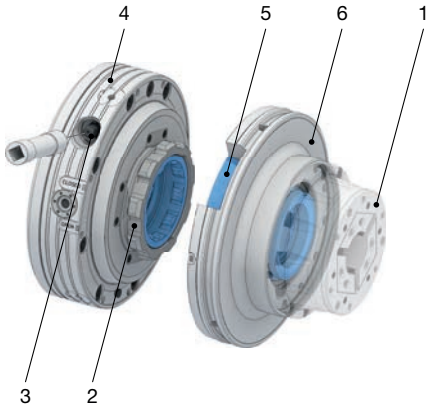

centroteX M in detail

Designation	
1 Clamping device 2 Six axial quick-acting screws 3 Bayonet coupling 4 Machine adapter 5 CENTREX system for µm-precise use without adjustment 6 Clamping device adapter	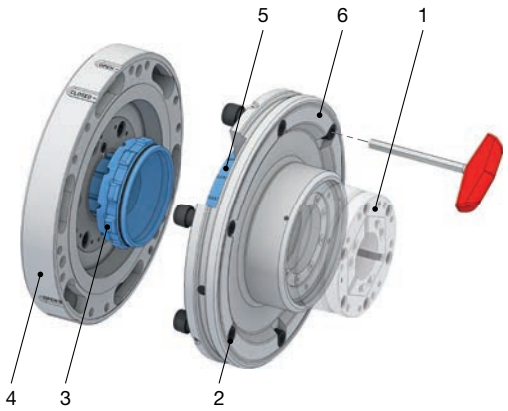

mandoteX in detail

Designation	
1 Machine adapter 2 Clamping device adapter 3 Mandrel [not included in the standard scope of delivery] 4 Three axial locking screws 5 CENTREX system for µm-precise use without adjustment 6 Bayonet coupling	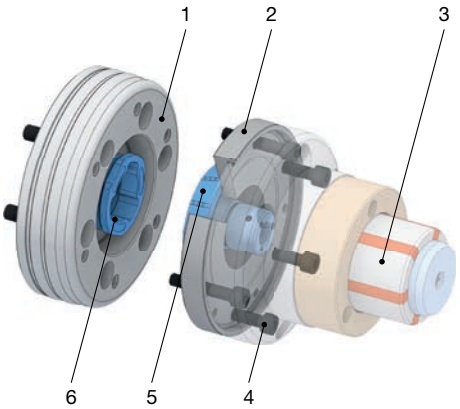

CENTREX – the technology that guarantees maximum precision in our quick-change interfaces

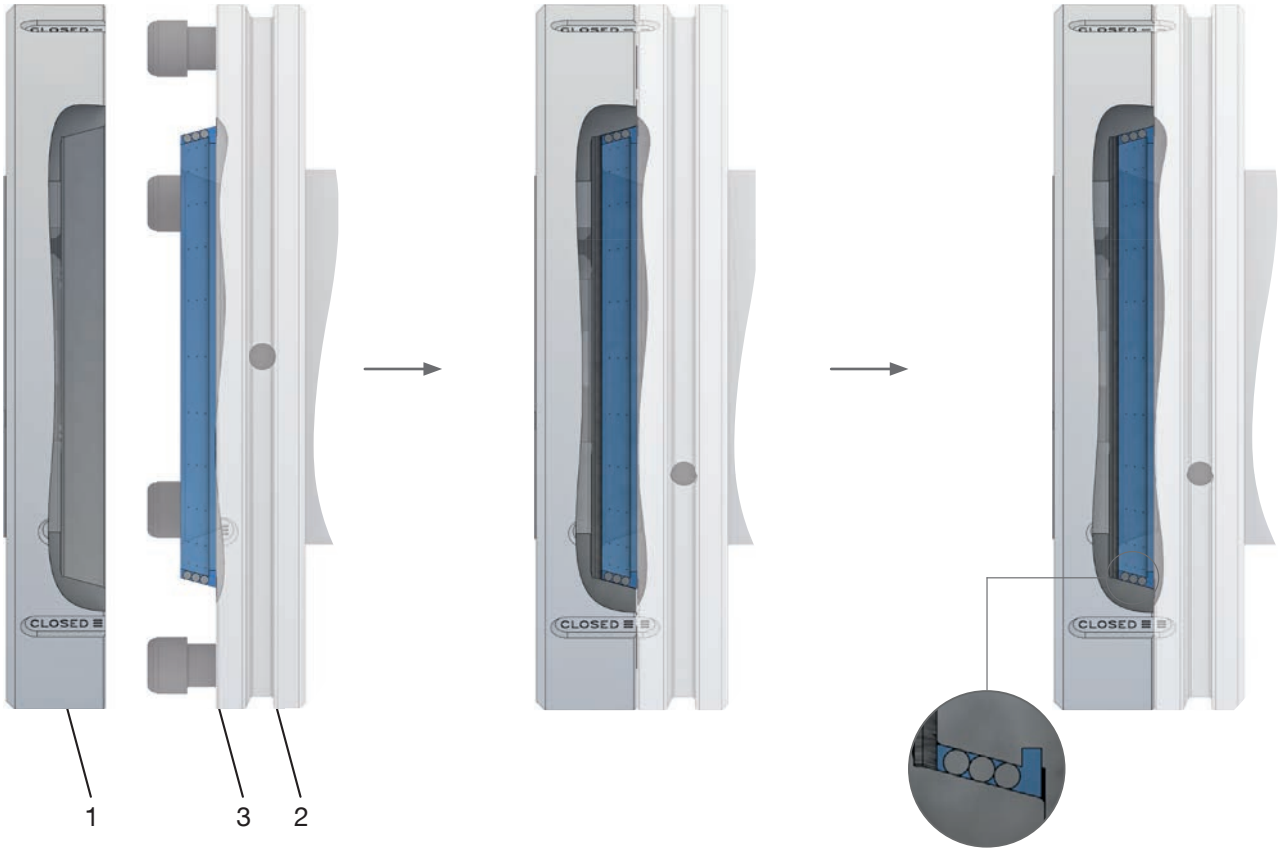

Machine adapter [1] with inner taper and clamping device adapter [2] with precision steel balls embedded in the rubber [3].

Place the clamping device adapter on the machine adapter. The precision steel balls contact the inner taper.

When the clamping device adapter is locked the taper with the precision steel balls is pulled into the inner taper. The overdetermined position of the precision steel balls causes the clamping device adapter to move into the exact same position each time.

One interface for all requirements – versatile use of clamping devices on different machines

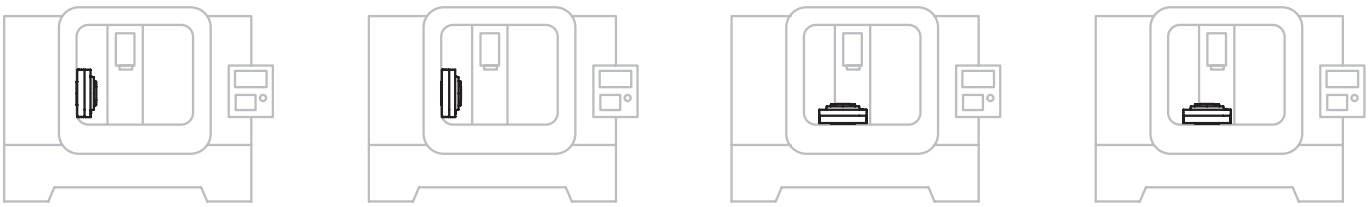

Lathe 1
with centroteX
machine adapter

Lathe 2
with centroteX
machine adapter

Milling machine
with centroteX
machine adapter

Machining center
with centroteX
machine adapter



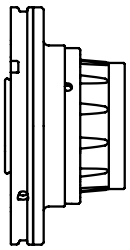

Clamping device adapter
with chuck

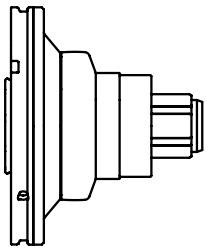

Clamping device adapter
with mandrel

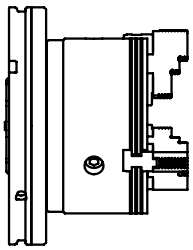

Clamping device adapter
with jaw chuck

- Always use the optimal clamping device for production.
- Always manufacture the required workpiece.
- You only have to purchase the specific clamping device once.

centroteX S. Machine adapter with short taper / cylinder fit

Short taper A2

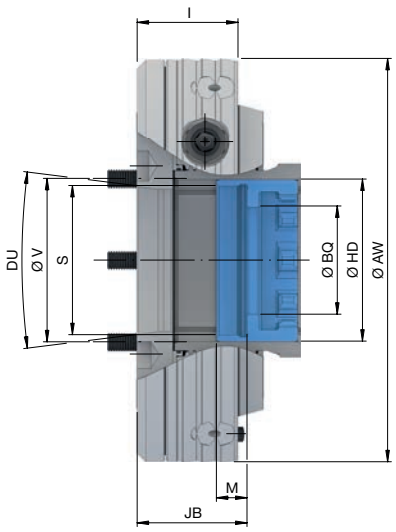

Cylinder fit AP

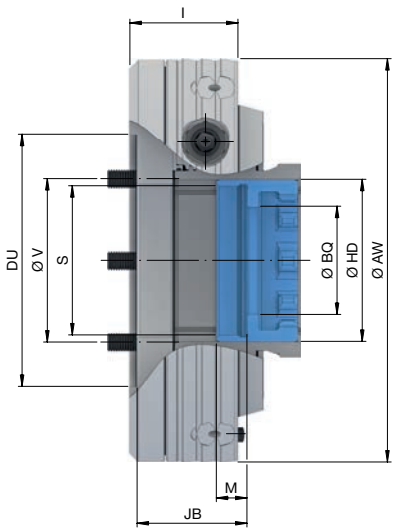

Spindle nose	DU	**A2-5**	**A2-6**	**AP140**	**AP170**
Outer Ø [mm]	AW	**224**			
Ø Capacity [mm]	BQ	52			
Repeatability ≤ [mm]		0,003			
Outer Ø 2 [mm]	HD	90			
Connecting thread inside	S	M85 x 2			
Depth of thread [mm]	M	17			
Thread position in the front end-stop [mm]	JB	61,5			63
Bolt hole circle	V	LK Ø 104,8 [6 x M10]	LK Ø 133,4 [6 x M12]	LK Ø 104,8 [6 x M10]	LK Ø 133,4 [6 x M12]
Total length [mm]	l	56		60	
Weight [kg]		15,8	15,3	16,5	15,8
In stock		✔	✔	✔	✔
Material no.		10015365	10015370	10015373	10015374

A2-5 / A2-6: Machine spindle standard DIN 702-1.

Scope of delivery

- Machine adapter
- Bayonet coupling
- Fit-on wrench socket for actuation tool

centroteX S. Clamping device adapter + TOPlus mini

Pull-back

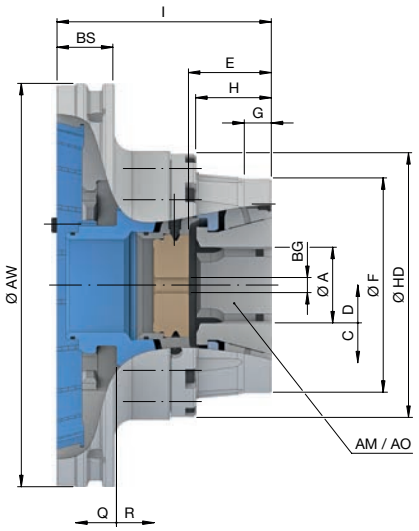

Deadlength

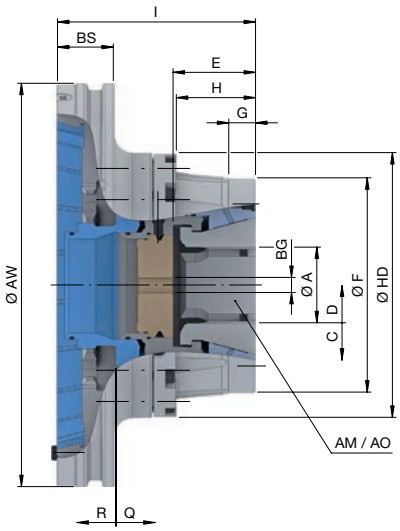

Variant		Pull-back				Deadlength			
Size		**26**	**40**	**52**	**65**	**26**	**40**	**52**	**65**
Max. radial clamping force [kN]		35	103	108	120	35	103	108	120
Max. axial drawtube force [pull / push] [kN]		16	33	40	45	16	33	40	45
RPM n max. [1/min.]		6000							
Clamping range [mm]	A	3 – 26	3 – 40	3 – 52	3 – 65	3 – 26	3 – 40	3 – 52	3 – 65
Release stroke in Ø [mm]	C	1	0,6			1	0,6		
Reserve stroke in Ø [mm]	D	0,6	0,8		1	0,6	0,8	1	
Range / recommended workpiece tolerance [mm]		± 0,3	± 0,5			± 0,3	± 0,5		
End-stop depth [mm]	E	33,8	48,1	46	54	33,8	47,7	45,8	54
End-stop thread size [M]	BG	8	10		12	8	10		12
Location front end-stop	F	Ø 67 f7	Ø 91 f7	Ø 119 f7	Ø 129 f7	Ø 74 f7	Ø 99 f7	Ø 119 f7	Ø 137 f7
Centering length [mm]	G	15	20	15		20		15	20
Length [mm]	H	31	47	42	49	31	47	44	50
Length 2 [mm]	BS	32							
Total length [mm]	I	100,5	115	119	125	107	117,5	110	124
Reserve stroke axial [mm]	Q	1	2			1	2		
Release stroke axial [mm]	R	2		2,5		2		2,5	
Clamping head serrated	AM	TOP 26	TOP 40	TOP 52	TOP 65	TOP 26	TOP 40	TOP 52	TOP 65
Clamping head smooth	AO	TOP 26 G	TOP 40 G	TOP 52 G	TOP 65 G	TOP 26 G	TOP 40 G	TOP 52 G	TOP 65 G
Outer Ø [mm]	AW	224							
Outer Ø 2 [mm]	HD	113	131	147	160	113	132	147	166
Weight [kg]		10	11	13	14	10	12	13	15
In stock		✔	✔	✔	✔	✔	✔	✔	✔
Material no.		10015296	10015297	10015298	10015301	10015303	10015305	10015306	10015308




Clamping heads
Page 422

Accessory overview
Page 478

Scope of delivery

- Clamping device adapter
- Chuck
- Base end-stop

centroteX S. Clamping device adapter + TOPlus premium

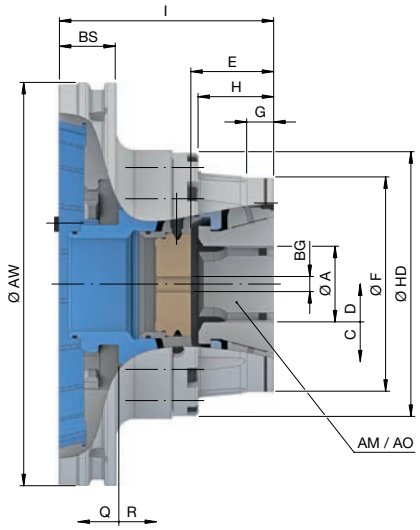

Variant		Pull-back			
Size		**26**	**40**	**52**	**65**
Max. radial clamping force [kN]		35	103	108	120
Max. axial drawtube force [pull / push] [kN]		16	33	40	45
RPM n max. [1/min.]		6000			
Clamping range [mm]	A	3 – 26	3 – 40	3 – 52	3 – 65
Release stroke in Ø [mm]	C	1	0,6		
Reserve stroke in Ø [mm]	D	0,6	0,8		1
Range / recommended workpiece tolerance [mm]		± 0,3	± 0,5		
End-stop depth [mm]	E	33,8	48,1	46	54
End-stop thread size [M]	BG	8	10		12
Location front end-stop	F	Ø 67 f7	Ø 91 f7	Ø 119 f7	Ø 129 f7
Centering length [mm]	G	15	20	15	20
Length [mm]	H	31	47	42	49
Length 2 [mm]	BS	32			
Total length [mm]	I	100,5	115	119	125
Reserve stroke axial [mm]	Q	1	2		
Release stroke axial [mm]	R	2		2,5	
Clamping head serrated	AM	TOP 26	TOP 40	TOP 52	TOP 65
Clamping head smooth	AO	TOP 26 G TOP 26 G premium	TOP 40 G TOP 40 G premium	TOP 52 G TOP 52 G premium	TOP 65 G TOP 65 G premium
Outer Ø [mm]	AW	224			
Outer Ø 2 [mm]	HD	113	131	147	160
Weight [kg]		10	11	13	14
In stock		✔	✔	✔	✔
Material no.		10017796	10017797	10017798	10017799


Clamping heads
Page 422


Accessory overview
Page 478

Scope of delivery

- Clamping device adapter
- Chuck
- Base end-stop

centroteX S. Clamping device adapter + SPANNTOP mini

Pull-back

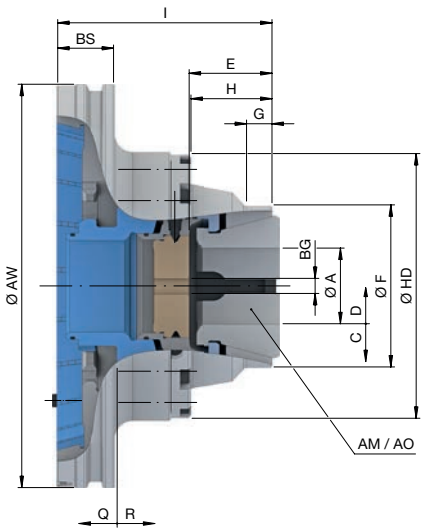

Deadlength

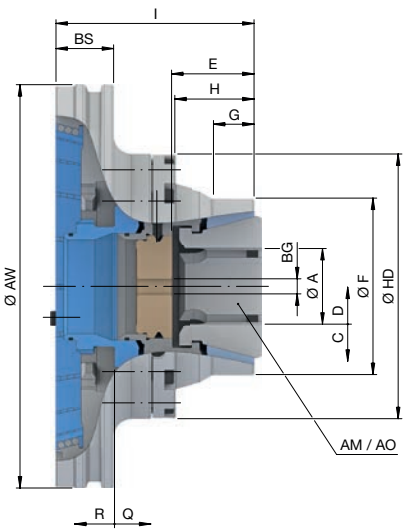

Variant		Pull-back				Deadlength			
Size		**32**	**42**	**52**	**65**	**32**	**42**	**52**	**65**
Max. radial clamping force [kN]		70	80	94	105	70	80	94	105
Max. axial drawtube force [pull / push] [kN]		25	35	40	45	25	35	40	45
RPM n max. [1/min.]		6000							
Clamping range [mm]	A	3 – 32	3 – 42	3 – 52	3 – 65	3 – 32	3 – 42	3 – 52	3 – 65
Release stroke in Ø [mm]	C	0,6							
Reserve stroke in Ø [mm]	D	0,8	1			0,8	1		
Range / recommended workpiece tolerance [mm]		± 0,3	± 0,5			± 0,3	± 0,5		
End-stop depth [mm]	E	45	42	46	54	45	42	46	54
End-stop thread size [M]	BG	10			12	10			12
Location front end-stop	F	Ø 66 f7	Ø 90 f7		Ø 111 f7	Ø 74 f7	Ø 90 f7	Ø 98 f7	Ø 119 f7
Centering length [mm]	G	17	15		18	15	25	23	22
Length [mm]	H	43	42	45	47	43	44		50
Length 2 [mm]	BS	31							
Total length [mm]	I	115,5	114	119	125	120	118	110	124
Reserve stroke axial [mm]	Q	2,5	2			3	2		
Release stroke axial [mm]	R	3	2,5						
Clamping head serrated	AM	SK 32 BZI	SK 42 BZI	SK 52 BZI	SK 65 BZI	SK 32 BZI	SK 42 BZI	SK 52 BZI	SK 65 BZI
Clamping head smooth	AO	SK 32 BZIG	SK 42 BZIG	SK 52 BZIG	SK 65 BZIG	SK 32 BZIG	SK 42 BZIG	SK 52 BZIG	SK 65 BZIG
Outer Ø [mm]	AW	224							
Outer Ø 2 [mm]	HD	129	127	147	160	127	137	147	166
Weight [kg]			11		13	11	12	11	13
In stock		✔	✔	✔	✔	✔	✔	✔	✔
Material no.		10015286	10015287	10015289	10015290	10015291	10015293	10015294	10015295



Clamping heads
Page 430


Accessory overview
Page 478

Scope of delivery

- Clamping device adapter
- Chuck
- Base end-stop

centroteX S. Clamping device adapter + jaw chuck B-Top

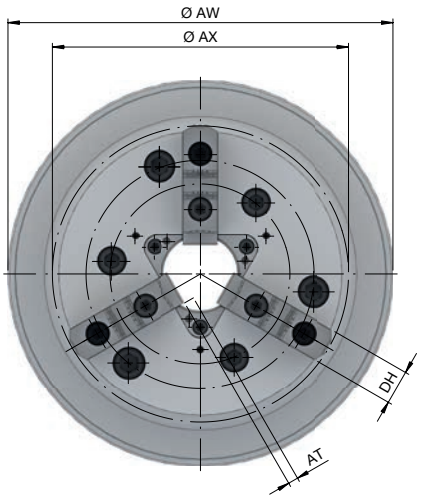

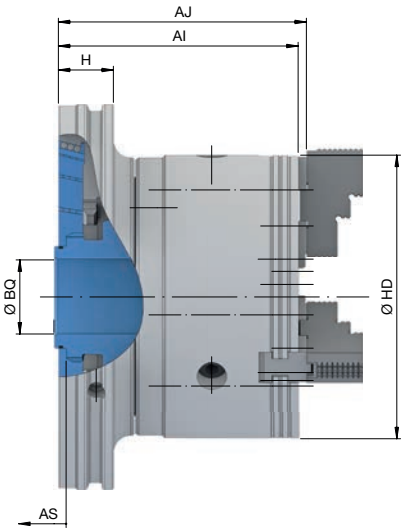

Size		165	215
Max. radial clamping force [kN]		**41**	**74**
Max. axial drawtube force [pull / push] [kN]		30	46
RPM n max. [1/min.]		6000	5400
Stroke per jaw [mm]	AT	5,9	7,4
Jaw width [mm]	DH	20	22
Piston stroke [mm]	AS	20	25
Swing Ø	AX	191	
Length [mm]	H	32	
Outer Ø [mm]	AW	224	
Outer Ø 2 [mm]	HD	165	215
Length without jaws [mm]	AI	139,5	143,1
Length with jaws [mm]	AJ	144,9	148,5
Ø Capacity [mm]	BQ	43	55
Weight [kg]		22	34
In stock		✔	✔
Material no.		10016705	10015364





Jaws
Page 454

Accessory overview
Page 478

Scope of delivery

- Clamping device adapter
- Jaw chuck
- Master jaws
- Jaw release wrench

centroteX S. Clamping device adapter + InoFlex VT-S

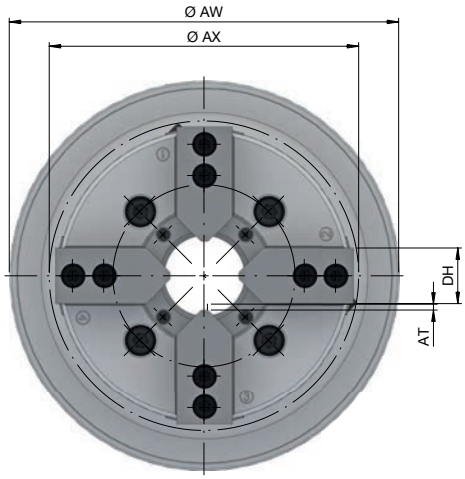

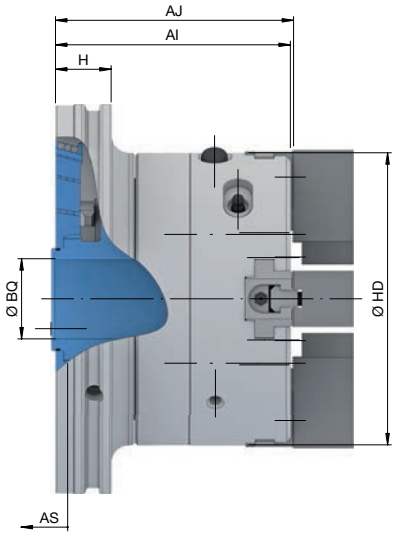

Size		165	215
Variant		**VT-S**	
Max. radial clamping force [kN]		52	100
Max. axial drawtube force [pull / push] [kN]		20	40
RPM n max. [1/min.]		5000	3900
Stroke per jaw [mm]	AT	3,4	4,3
Jaw width [mm]	DH	32	34
Piston stroke [mm]	AS	15	19
Swing Ø	AX	178	222
Length [mm]	H	32	
Outer Ø [mm]	AW	224	
Outer Ø 2 [mm]	HD	168	218
Length without jaws [mm]	AI	135,1	161,7
Length with jaws [mm]	AJ	136,6	163,2
Ø Capacity [mm]	BQ	46	52
Compensating stroke for each jaw [mm]		2,3	3,3
Weight [kg]		21	33
In stock		✔	✔
Material no.		10016706	10016708


Jaws
Page 458


Accessory overview
Page 478

Scope of delivery

- Clamping device adapter
- Jaw chuck
- Top jaws, soft
- T-slot nuts
- Grease cartridge
- Assembly wrench for revolving threaded ring

centroteX S. Clamping device adapter + mandrel MANDO T211

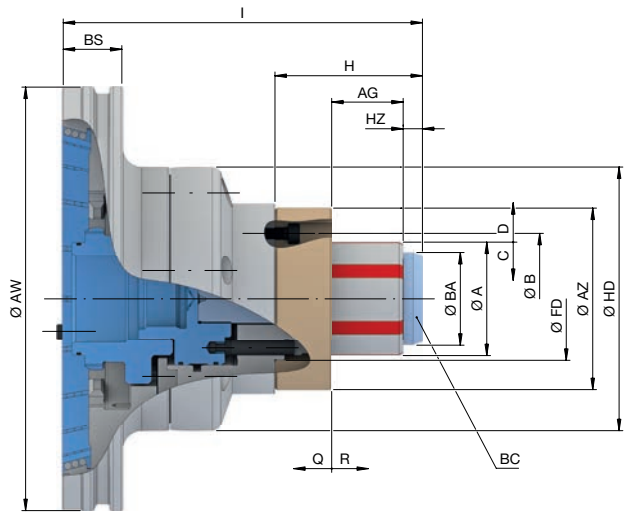

Size		0	1	2	3	4	5
Clamping range [mm]	A	**20 – 28**	**26 – 38**	**36 – 54**	**50 – 80**	**69 – 120**	**100 – 130**
Max. radial clamping force [kN]		42		85	105	150	170
Max. axial drawtube force [pull / push] [kN]		10		20	25	35	40
Max. clamping length [mm]	AG	22	26	43	49	59	86
RPM n max. [1/min.]				6000			5000
Draw bolt Ø [mm]	BA	19	25	35	49	68	97
Draw bolt head height [mm]	HZ	7,5	11	10	11	16	
Reserve stroke in Ø [mm]	D	0,3			0,4		0,5
Release stroke in Ø [mm]	C	0,3			0,4		0,5
Reserve stroke axial [mm]	Q	1,5			2	2,5	3
Release stroke axial [mm]	R	2			2,5	3	
Reception workpiece end-stop	FD	Ø 32 f7	Ø 41 f7	Ø 50 f7	Ø 65 f7	Ø 78 f7	Ø 102 f7
Bolt hole circle end-stop	B	LK Ø 50 [3 x M6]	LK Ø 55 [3 x M6]	LK Ø 78 [3 x M6]	LK Ø 80 [3 x M6]	LK Ø 90 [3 x M6]	LK Ø 117 [3 x M6]
End-stop outer Ø [mm]	AZ	65	69	93	96	100	150
Length [mm]	H	40	51	71	78	98	120
Length 2 [mm]	BS			31			37,5
Total length [mm]	I	150	160	180	190	205	236
Outer Ø [mm]	AW			224			230
Outer Ø 2 [mm]	HD			139			230
Max. actuating torque [Nm]	BC	10	20	25	55		65
Weight [kg]		13	12	13	14	15	32
In stock		✔	✔	✔	✔	✔	✔
Material no.		10015309	10015310	10015319	10015320	10015321	10015322

For size 4, clamping range 101 - 120 mm, a max. speed of 4,200 RPM applies.


Segmented clamping bushings
Page 442


Accessory overview
Page 478

Scope of delivery

- Clamping device adapter
- Mandrel without air sensing adapter
- Draw bolt

centroteX S. Clamping device adapter + mandrel MANDO T212

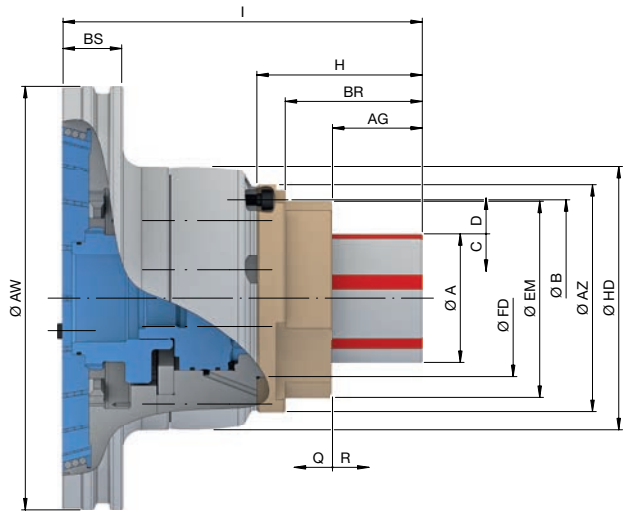

Size		XXS	XS	S	0	1	2	3	4	5
Clamping range [mm]	A	8 – 13	13 – 19	16 – 21	20 – 28	26 – 38	36 – 54	50 – 80	69 – 100	100 – 130
Max. radial clamping force [kN]		42					85	105	150	170
Max. axial drawtube force [pull / push] [kN]		10					20	25	35	40
Max. clamping length [mm]	AG	12,9	14	15	21	25	40	44,5	52,5	53
Reserve stroke in Ø [mm]	D	0,2	0,3					0,4		0,5
Release stroke in Ø [mm]	C	0,2	0,3					0,4		0,5
RPM n max. [1/min.]		6000								5000
Reserve stroke axial [mm]	Q	1,5						2,5		3
Release stroke axial [mm]	R	1,5	2					3		
Reception workpiece end-stop	FD	Ø 34 f7	Ø 36 f7	Ø 39 f7	Ø 47 f7	Ø 55 f7	Ø 65 f7	Ø 83 f7	Ø 103 f7	Ø 140 f7
Bolt hole circle end-stop	B	LK Ø 53 [3 x M5]		LK Ø 57 [3 x M5]	LK Ø 70 [3 x M6]	LK Ø 75 [3 x M6]	LK Ø 90 [3 x M6]	LK Ø 104 [3 x M6]	LK Ø 124 [3 x M6]	LK Ø 167 [3 x M8]
End-stop outer Ø [mm]	AZ	65		70	90		104	120	138	195
End-stop outer Ø 2 [mm]	EM	41	42	45	54	62	76	105	124	160
Length [mm]	H	46	40	48	59	65	81	88	98	112
Length 2 [mm]	BS	31								32
Depth [mm]	BR	36,5		38	44	47	62	77,5		92
Total length [mm]	I	150,5	145	147	158	164	182	190	198,5	224
Outer Ø [mm]	AW	224								230
Outer Ø 2 [mm]	HD	139								230
Weight [kg]		13					14	15	16	34
In stock		✔	✔	✔	✔	✔	✔	✔	✔	✔
Material no.		10015332	10015334	10015336	10015337	10015353	10015359	10015360	10015362	10015363



Segmented clamping bushings
Page 442

Accessory overview
Page 478

Scope of delivery

- Clamping device adapter
- Mandrel without air sensing adapter
- Coupling ring
- Support sleeve for SAD segmented clamping bushings
- Mounting aid depending on size

centroteX S. Clamping device adapter + mandrel MANDO T812

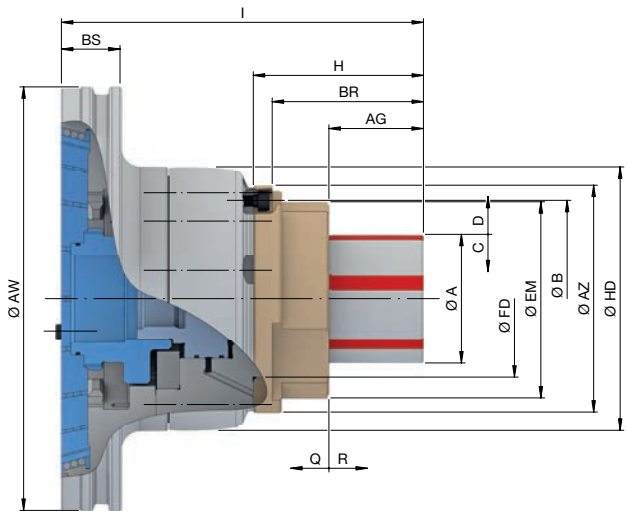

Size		XXS	XS	S	0	1	2	3	4
Clamping range [mm]	A	**8 – 13**	**13 – 19**	**16 – 21**	**20 – 28**	**26 – 38**	**36 – 54**	**50 – 80**	**69 – 100**
Max. radial clamping force [kN]		42					85	105	150
Max. axial drawtube force [pull / push] [kN]		10					20	25	35
Max. clamping length [mm]	AG	8,2	14	15	21	25	40	44,5	52,5
Reserve stroke in Ø [mm]	D	0,1	0,2					0,3	0,4
Release stroke in Ø [mm]	C	0,2	0,4					0,5	0,6
RPM n max. [1/min.]		6000							
Reserve stroke axial [mm]	Q	1						1,5	2
Release stroke axial [mm]	R	1,5	2					2,5	
Reception workpiece end-stop	FD	Ø 34 f7	Ø 36 f7	Ø 39 f7	Ø 47 f7	Ø 55 f7	Ø 65 f7	Ø 83 f7	Ø 103 f7
Bolt hole circle end-stop	B	LK Ø 53 [3 x M5]		LK Ø 57 [3 x M5]	LK Ø 70 [3 x M6]	LK Ø 75 [3 x M6]	LK Ø 90 [3 x M6]	LK Ø 104 [3 x M6]	LK Ø 124 [3 x M6]
End-stop outer Ø [mm]	AZ	65		70	90		104	120	138
End-stop outer Ø 2 [mm]	EM	41	42	45	54	62	76	105	124
Length [mm]	H	44	47,5	49,5	60,5	66,5	82,5	89,5	
Length 2 [mm]	BS	31							
Depth [mm]	BR	35,0	39,5	41,5	51,5	57,5	73,5	80,0	90,5
Total length [mm]	I	136,3	149	152	164	167,5	183,5	191,5	201,5
Outer Ø [mm]	AW	224							
Outer Ø 2 [mm]	HD	139							
Weight [kg]		13			14			16	17
In stock		✔	✔	✔	✔	✔	✔	✔	✔
Material no.		10016709	10016711	10016712	10016713	10016715	10016716	10016717	10016718


Segmented clamping bushings
Page 442


Accessory overview
Page 478

Scope of delivery

- Clamping device adapter
- Mandrel without air sensing adapter
- Coupling ring
- Support sleeve for SAD segmented clamping bushings
- Mounting aid depending on size

centroteX S. Clamping device adapter + mandrel MAXXOS T211

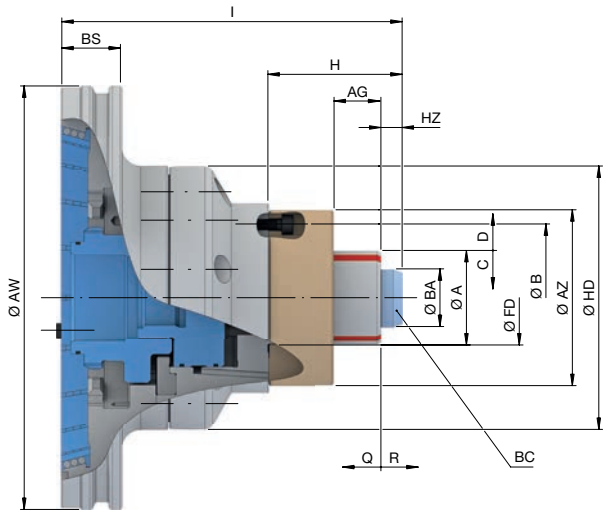

Size		A	B	C	D	E	F
Clamping range [mm]	A	**18 – 24**	**20 – 32**	**24 – 39**	**32 – 50**	**39 – 68**	**50 – 100**
Max. radial clamping force [kN]		27	36	51	70	86	143
Max. axial drawtube force [pull / push] [kN]		7,5	10	16	22	27	45
Max. clamping length [mm]	AG	20	22,5	24	35,3	45,3	
RPM n max. [1/min.]		6000					
Draw bolt Ø [mm]	BA	17	19	23	31	38	49
Draw bolt head height [mm]	HZ	7,5		11	11,2		11,7
Reserve stroke in Ø [mm]	D	0,3		0,4			
Release stroke in Ø [mm]	C	0,2		0,3			
Reserve stroke axial [mm]	Q	2					
Release stroke axial [mm]	R	2			2,5		
Reception workpiece end-stop	FD	Ø 32 f7		Ø 41 f7	Ø 50 f7	Ø 65 f7	
Bolt hole circle end-stop	B	LK Ø 50 [3 x M6]		LK Ø 55 [3 x M6]	LK Ø 78 [3 x M6]	LK Ø 80 [3 x M6]	
End-stop outer Ø [mm]	AZ	65		69	93	96	
Length [mm]	H	40	40,5	53,5	71	78	80
Length 2 [mm]	BS	31					
Total length [mm]	I	150	150,5	160	180	190	
Outer Ø [mm]	AW	224					
Outer Ø 2 [mm]	HD	140					
Max. actuating torque [Nm]	BC	7	10	15	20	25	55
Weight [kg]		12		13		14	
In stock		✔	✔	✔	✔	✔	✔
Material no.		10015325	10015326	10015327	10015328	10015329	10015330



Segmented clamping bushings
Page 448



Accessory overview
Page 478

Scope of delivery

- Clamping device adapter
- Mandrel without air sensing adapter
- Draw bolt

centroteX M. Machine adapter with short taper / cylinder fit

Short taper A2

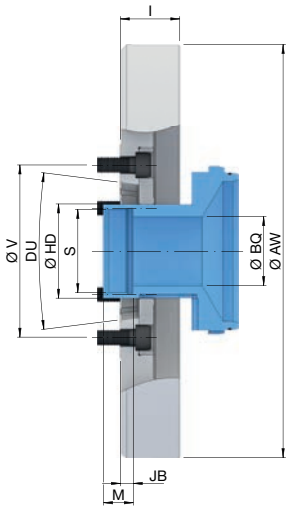

Cylinder fit AP

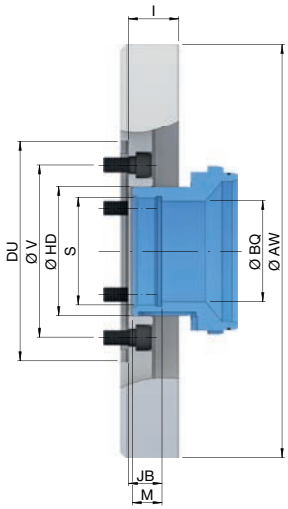

Spindle nose	DU	A2-6			A2-8			AP170	AP220
Outer Ø [mm]	AW	320							
Ø Capacity [mm]	BQ	53	58	68	75	84	94	78	105,5
Repeatability ≤ [mm]		0,005							
Outer Ø 2 [mm]	HD	73 g7	76 g7	85 g7	91 g7	101 g7	110 g7	100 g7	129 g7
Connecting thread inside	S	M66 x 1,5	M70 x 1,5	M79 x 1,5	M85 x 1,5	M95 x 1,5	M105 x 1,5	M85 x 1,5	M116 x 2
Depth of thread [mm]	M	23							32
Thread position in the front end-stop [mm]	JB	10			19			26	31
Bolt hole circle	V	LK Ø 133,4 [6 x M12]			LK Ø 171,4 [6 x M16]			LK Ø 133,4 [6 x M12]	LK Ø 171,4 [6 x M16]
Total length [mm]	l	46			53			39	44
Weight [kg]		22	21	22	25	24		21	22
In stock		✔	✔	✔	✔	✔	✔	✔	✔
Material no.		10000656	10000655	10000654	10000660	10000659	10000658	10000662	10000664

A2-6 / A2-8: Machine spindle standard DIN ISO 702-1.

Scope of delivery

- Machine adapter
- Bayonet coupling

centroteX M. Clamping device adapter + TOPlus mini

Pull-back

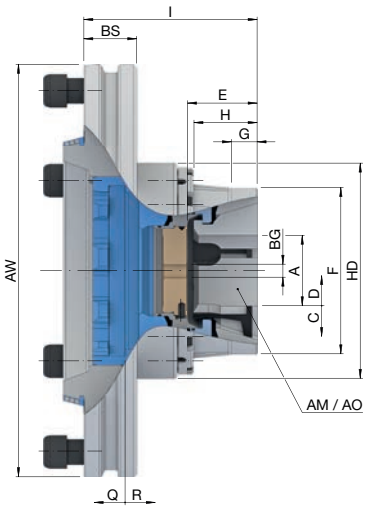

Deadlength

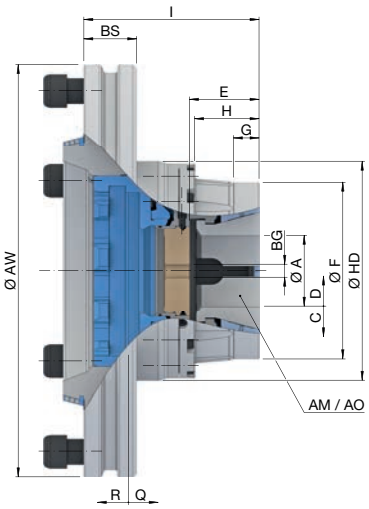

Variant		Pull-back		Deadlength	
Size		**65**	**100**	**65**	**100**
Max. radial clamping force [kN]		120	172	120	172
Max. axial drawtube force [pull / push] [kN]		45	65	45	65
RPM n max. [1/min.]		6000	5000	6000	5000
Clamping range [mm]	A	3 – 65	15 – 100	3 – 65	15 – 100
Release stroke in Ø [mm]	C	0,6	2	0,6	2
Reserve stroke in Ø [mm]	D	1	1,5	1	1,5
Range / recommended workpiece tolerance [mm]		± 0,5	± 1,0	± 0,5	± 1,0
End-stop depth [mm]	E	54	72	54	74
End-stop thread size [M]	BG	12			
Location front end-stop	F	Ø 129 f7	Ø 183 f7	Ø 137 f7	Ø 191 f7
Centering length [mm]	G	20		22	
Length [mm]	H	49	64	50	64
Length 2 [mm]	BS	41			
Total length [mm]	I	134,5	159	136	166
Reserve stroke axial [mm]	Q	2	3	2	3
Release stroke axial [mm]	R	2,5	5	2,5	5
Clamping head serrated	AM	TOP 65	TOP 100	TOP 65	TOP 100
Clamping head smooth	AO	TOP 65 G	TOP 100 G	TOP 65 G	TOP 100 G
Outer Ø [mm]	AW	320			
Outer Ø 2 [mm]	HD	167	216	170	220
Weight [kg]		29	41	29	43
In stock		✔	✔	✔	✔
Material no.		10016184	10016185	10000678	10000679


Clamping heads
Page 422

Accessory overview
Page 478

Scope of delivery

- Clamping device adapter
- Chuck
- Base end-stop

centroteX M. Clamping device adapter + TOPlus

Combi pull-back

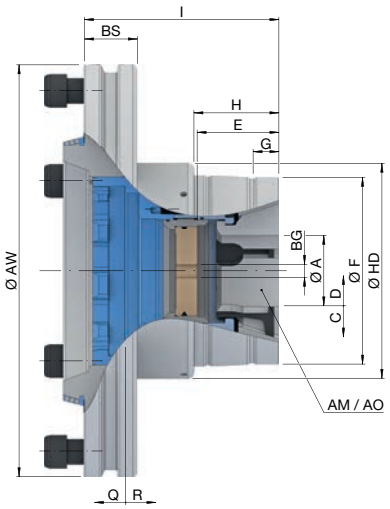

Combi deadlength

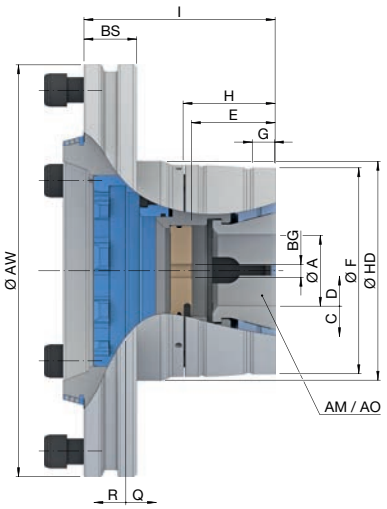

Variant		Combi pull-back		Combi deadlength	
Size		**65**	**100**	**65**	**100**
Max. radial clamping force [kN]		120	172	120	172
Max. axial drawtube force [pull / push] [kN]		45	65	45	65
RPM n max. [1/min.]		6000	5000	6000	5000
Clamping range [mm]	A	3 – 65	15 – 100	3 – 65	15 – 100
Release stroke in Ø [mm]	C	0,6	2	0,6	2
Reserve stroke in Ø [mm]	D	1	1,5	1	1,5
Range / recommended workpiece tolerance [mm]		± 0,5	± 1,0	± 0,5	± 1
End-stop depth [mm]	E	63,5	73	65	85,5
End-stop thread size [M]	BG	12			
Location front end-stop	F	Ø 145 f7	Ø 215 f7	Ø 160 f7	Ø 215 f7
Centering length [mm]	G	20	23	17	23
Length [mm]	H	66	78,5	71,5	94
Length 2 [mm]	BS	41			
Total length [mm]	I	154	161,5	148,5	173
Reserve stroke axial [mm]	Q	2	3	2	3
Release stroke axial [mm]	R	2,5	5	2,5	5
Clamping head serrated	AM	TOP 65	TOP 100	TOP 65	TOP 100
Clamping head smooth	AO	TOP 65 G	TOP 100 G	TOP 65 G	TOP 100 G
Outer Ø [mm]	AW	320			
Outer Ø 2 [mm]	HD	167	233	170	219
Weight [kg]		31	45	33	48
In stock		✔	✔	✔	✔
Material no.		10000672	10000673	10000674	10000675


Clamping heads
Page 422


Accessory overview
Page 478

Scope of delivery

- Clamping device adapter
- Chuck
- Base end

centroteX M. Clamping device adapter + SPANNTOP mini

Pull-back

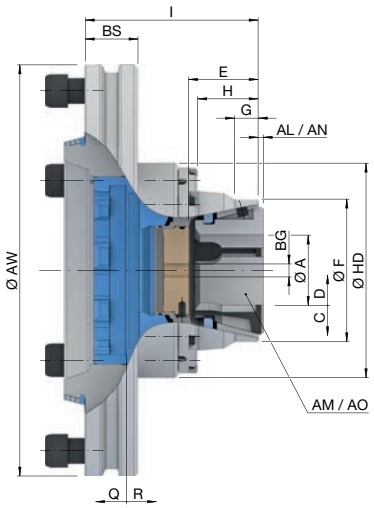

Deadlength

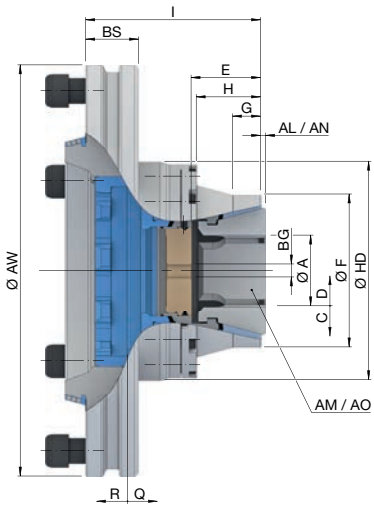

Variant		Pull-back		Deadlength	
Size		**65**	**100**	**65**	**100**
Max. radial clamping force [kN]		105	150	105	150
Max. axial drawtube force [pull / push] [kN]		45	65	45	64
RPM n max. [1/min.]		6000	5000	6000	5000
Clamping range [mm]	A	3 – 65	15 – 100	3 – 65	15 – 100
Release stroke in Ø [mm]	C	0,6	2	0,6	2
Reserve stroke in Ø [mm]	D	1	1,5	1	1,5
Range / recommended workpiece tolerance [mm]		± 0,5	± 1,0	± 0,5	± 1,0
End-stop depth [mm]	E	54	72	54	74
End-stop thread size [M]	BG	12			
Location front end-stop	F	Ø 111 f7	Ø 160 f7	Ø 119 f7	Ø 168 f7
Centering length [mm]	G	20		22	
Length [mm]	H	47	64	50	64
Length 2 [mm]	BS	41			
Total length [mm]	I	134,5	159	136	166
Reserve stroke axial [mm]	Q	2	3	2	3
Release stroke axial [mm]	R	2,5	5	2,5	5
Clamping head serrated	AM	SK 65 BZI	SK 100 BZ	SK 65 BZI	SK 100 BZ
Clamping head protrusion length serrated [mm]	AL	9		9	
Clamping head smooth	AO	SK 65 BZIG	SK 100 BZG	SK 65 BZIG	SK 100 BZG
Clamping head protrusion length smooth [mm]	AN	4		4	
Outer Ø [mm]	AW	320			
Outer Ø 2 [mm]	HD	167	216	170	220
Weight [kg]		28	39	28	40,5
In stock		✔	✔	✔	✔
Material no.		10016186	10016187	10016188	10016190



Clamping heads
Page 430



Accessory overview
Page 478

Scope of delivery

- Clamping device adapter
- Chuck
- Base end

centroteX M. Clamping device adapter + SPANNTOP nova

Combi pull-back

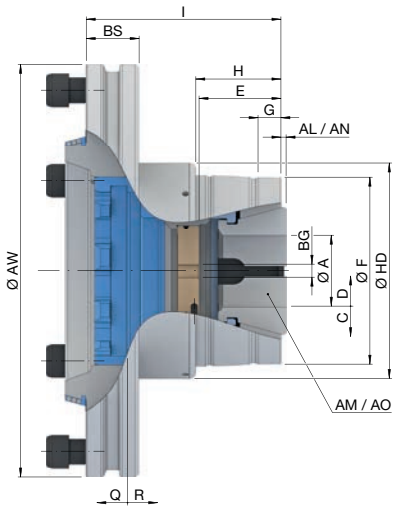

Combi deadlength

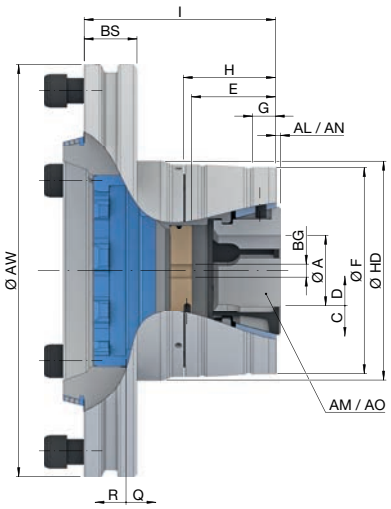

Variant		Combi pull-back		Combi deadlength	
Size		**65**	**100**	**65**	**100**
Max. radial clamping force [kN]		105	150	105	150
Max. axial drawtube force [pull / push] [kN]		45	65	45	65
RPM n max. [1/min.]		6000	5000	6000	5000
Clamping range [mm]	A	3 – 65	15 – 100	3 – 65	15 – 100
Release stroke in Ø [mm]	C	0,6	2	0,6	2
Reserve stroke in Ø [mm]	D	1	1,5	1	1,5
Range / recommended workpiece tolerance [mm]		± 0,5	± 1,0	± 0,5	± 1
End-stop depth [mm]	E	63,5	73	65	85,5
End-stop thread size [M]	BG	12			
Location front end-stop	F	Ø 145 f7	Ø 215 f7	Ø 160 f7	Ø 215 f7
Centering length [mm]	G	17	20	17	20
Length [mm]	H	66	78,5	71,5	94
Length 2 [mm]	BS	41			
Total length [mm]	I	151	157,5	148,5	173
Reserve stroke axial [mm]	Q	2	3	2	3
Release stroke axial [mm]	R	2,5	5	2,5	5
Clamping head serrated	AM	SK 65 BZI	SK 100 BZ	SK 65 BZI	SK 100 BZ
Clamping head protrusion length serrated [mm]	AL	9		9	
Clamping head smooth	AO	SK 65 BZIG	SK 100 BZG	SK 65 BZIG	SK 100 BZG
Clamping head protrusion length smooth [mm]	AN	4		4	
Outer Ø [mm]	AW	320			
Outer Ø 2 [mm]	HD	167	233	170	219
Weight [kg]		31	46	33	48
In stock		✔	✔	✔	✔
Material no.		10000668	10000669	10000670	10000671




Clamping heads	Accessory overview
Page 430	Page 478

Scope of delivery

- Clamping device adapter
- Chuck
- Base end

centroteX M. Clamping device adapter + jaw chuck B-Top

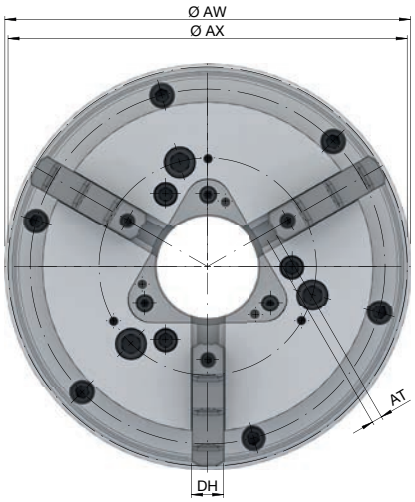

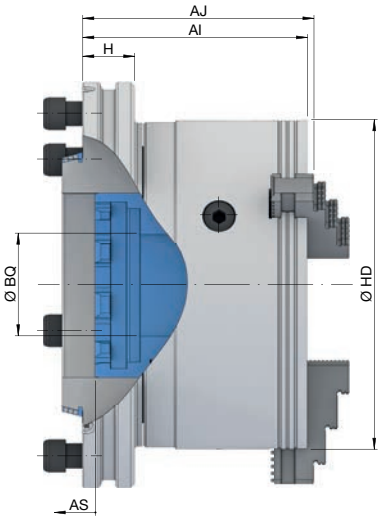

Size		165	260	315
Max. radial clamping force [kN]		**41**	**115**	**160**
Max. axial drawtube force [pull / push] [kN]		30	65	90
RPM n max. [1/min.]		6000	4000	3600
Stroke per jaw [mm]	AT	5,9	8,2	8,6
Jaw width [mm]	DH	20	26	32
Piston stroke [mm]	AS	20	28	
Swing Ø	AX	191,4	315	375,4
Length [mm]	H	41		
Outer Ø [mm]	AW	320		
Outer Ø 2 [mm]	HD	165	260	315
Length without jaws [mm]	AI	159,3	177,3	201,6
Length with jaws [mm]	AJ	164,7	183,5	212,3
Ø Capacity [mm]	BQ	43	81	104
Weight [kg]		38	73	103
In stock		✔	✔	✔
Material no.		10000666	10000665	10000667

For size 315, please note: For machine spindles <A2-8 / AP220, we recommend that your machine builder check the max. spindle bearing load.





Jaws
Page 454

Accessory overview
Page 478

Scope of delivery

- Clamping device adapter
- Jaw chuck
- Master jaws
- Jaw release wrench

centroteX M. Clamping device adapter + InoFlex VT-S

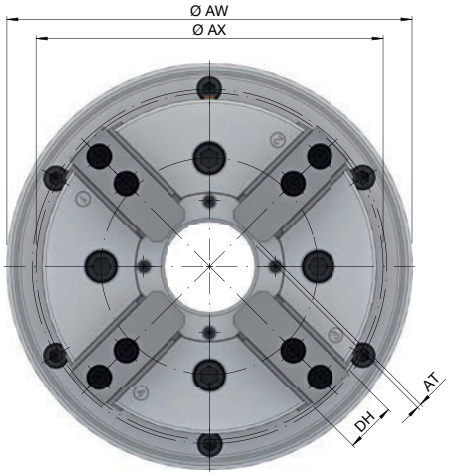

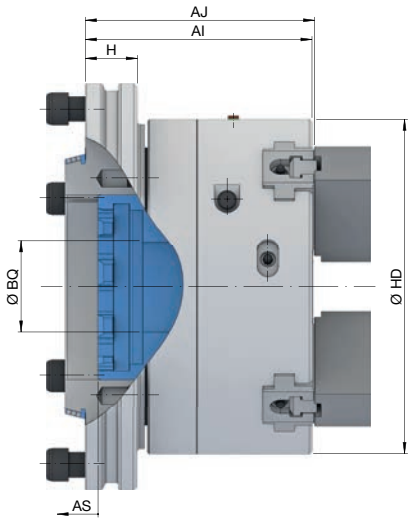

Size		165	260	315
Variant			**VT-S**	
Max. radial clamping force [kN]		52	125	150
Max. axial drawtube force [pull / push] [kN]		20	50	60
RPM n max. [1/min.]		5000	3750	2800
Stroke per jaw [mm]	AT	3,4	5	5,5
Jaw width [mm]	DH	32	45	46
Piston stroke [mm]	AS	15	22	24
Swing Ø	AX	178	274	326
Length [mm]	H		41	
Outer Ø [mm]	AW		320	
Outer Ø 2 [mm]	HD	168	264	315
Length without jaws [mm]	AI	154,9	179	202
Length with jaws [mm]	AJ	156,4	181	204
Ø Capacity [mm]	BQ	46	72	91
Compensating stroke for each jaw [mm]		2,3	4	4,4
Weight [kg]		37	70	98
In stock		✔	✔	✔
Material no.		10015206	10015207	10015208


Jaws
Page 458


Accessory overview
Page 478

Scope of delivery

- Clamping device adapter
- Jaw chuck
- Top jaws, soft
- T-slot nuts
- Grease cartridge
- Assembly wrench for revolving threaded ring

centroteX M. Clamping device adapter + mandrel MANDO T211

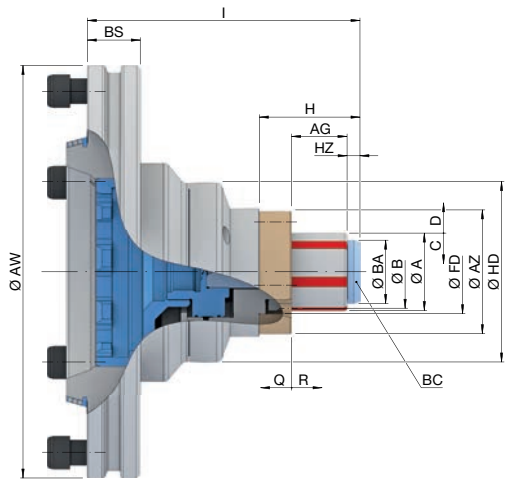

Size		0	1	2	3	4
Clamping range [mm]	A	**20 – 28**	**26 – 38**	**36 – 54**	**50 – 80**	**69 – 120**
Max. radial clamping force [kN]		42		85	105	150
Max. axial drawtube force [pull / push] [kN]		10		20	25	35
Max. clamping length [mm]	AG	22	26	43	49	59
RPM n max. [1/min.]		7000			6000	
Draw bolt Ø [mm]	BA	19	25	35	49	68
Draw bolt head height [mm]	HZ	7,5	11			16
Reserve stroke in Ø [mm]	D	0,3			0,4	
Release stroke in Ø [mm]	C	0,3			0,4	
Reserve stroke axial [mm]	Q	1,5			2	2,5
Release stroke axial [mm]	R	2		2,5		3
Reception workpiece end-stop	FD	Ø 32 f7	Ø 41 f7	Ø 50 f7	Ø 65 f7	Ø 78 f7
Bolt hole circle end-stop	B	LK Ø 50 [3 x M6]	LK Ø 55 [3 x M6]	LK Ø 78 [3 x M6]	LK Ø 80 [3 x M6]	LK Ø 90 [3 x M6]
End-stop outer Ø [mm]	AZ	65	69	93	96	100
Length [mm]	H	40	51	71	78	95
Length 2 [mm]	BS	41				
Total length [mm]	I	171,5	181,5	201,5	211,5	226,5
Outer Ø [mm]	AW	320				
Outer Ø 2 [mm]	HD	139				
Max. actuating torque [Nm]	BC	10	20	25	55	
Weight [kg]		29			30	31
In stock		✔	✔	✔	✔	✔
Material no.		10000680	10000681	10000682	10000683	10000684

For size 4, clamping range 101 - 120 mm, a max. speed of 4,200 RPM applies.


Segmented clamping bushings
Page 442


Accessory overview
Page 478

Scope of delivery

- Clamping device adapter
- Mandrel without air sensing adapter
- Draw bolt

centroteX M. Clamping device adapter + mandrel MANDO T212

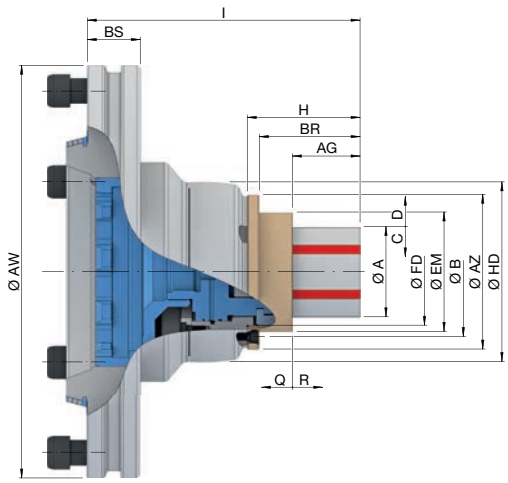

Size		XXS	XS	S	0	1	2	3	4
Clamping range [mm]	A	**8 – 13**	**13 – 19**	**16 – 21**	**20 – 28**	**26 – 38**	**36 – 54**	**50 – 80**	**69 – 100**
Max. radial clamping force [kN]		42					85	105	150
Max. axial drawtube force [pull / push] [kN]		10					20	25	35
Max. clamping length [mm]	AG	8,2	15		21	25	40	44,5	52,5
Reserve stroke in Ø [mm]	D	0,2	0,3					0,4	
Release stroke in Ø [mm]	C	0,2	0,3					0,4	
RPM n max. [1/min.]		7000						6000	
Reserve stroke axial [mm]	Q	1,5						2	2,5
Release stroke axial [mm]	R	1,5	2				2,5		3
Reception workpiece end-stop	FD	Ø 34 f7	Ø 36 f7	Ø 39 f7	Ø 47 f7	Ø 55 f7	Ø 65 f7	Ø 83 f7	Ø 103 f7
Bolt hole circle end-stop	B	LK Ø 53 [3 x M5]		LK Ø 57 [3 x M5]	LK Ø 70 [3 x M6]	LK Ø 75 [3 x M6]	LK Ø 90 [3 x M6]	LK Ø 104 [3 x M6]	LK Ø 124 [3 x M6]
End-stop outer Ø [mm]	AZ	65		70	90		104	120	138
End-stop outer Ø 2 [mm]	EM	41	42	45	54	62	76	105	124
Length [mm]	H	45,5		47,5	58,5	64,5	80,5	87,5	97,5
Length 2 [mm]	BS	41							
Depth [mm]	BR	36,5		38	44	47	62	66,5	77,5
Total length [mm]	I	172	166,5	168,5	179,5	185,5	211,5		220
Outer Ø [mm]	AW	320							
Outer Ø 2 [mm]	HD	139							
Weight [kg]		29			30		31	32	33
In stock		✔	✔	✔	✔	✔	✔	✔	✔
Material no.		10000685	10000686	10000687	10000688	10000689	10000690	10000691	10000692


Segmented clamping bushings
Page 442

Accessory overview
Page 478

Scope of delivery

- Clamping device adapter
- Mandrel without air sensing adapter
- Coupling ring
- Support sleeve for SAD segmented clamping bushings
- Mounting aid depending on size

centroteX M. Clamping device adapter + mandrel MAXXOS T211

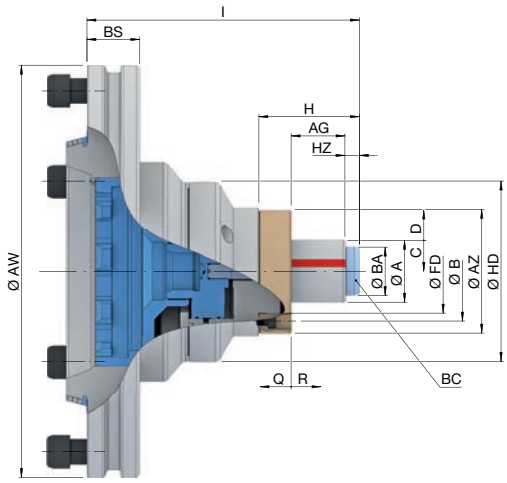

Size		A	B	C	D	E	F
Clamping range [mm]	A	**18 – 24**	**20 – 32**	**24 – 39**	**32 – 50**	**39 – 68**	**50 – 100**
Max. radial clamping force [kN]		27	42	51	70	86	143
Max. axial drawtube force [pull / push] [kN]		7,5	10	16	22	27	45
Max. clamping length [mm]	AG	20	22,5	24	35,3	45,3	
RPM n max. [1/min.]		7000					
Draw bolt Ø [mm]	BA	17	19	23	31	38	49
Draw bolt head height [mm]	HZ	7,5		11		11,2	11,7
Reserve stroke in Ø [mm]	D	0,3		0,4			
Release stroke in Ø [mm]	C	0,2		0,3			
Reserve stroke axial [mm]	Q	2					
Release stroke axial [mm]	R	2			2,5		
Reception workpiece end-stop	FD	Ø 32 f7		Ø 55 f7	Ø 50 f7	Ø 65 f7	
Bolt hole circle end-stop	B	LK Ø 50 [3 x M6]		LK Ø 41 [3 x M6]	LK Ø 78 [3 x M6]	LK Ø 80 [3 x M6]	
End-stop outer Ø [mm]	AZ	65		69	93	96	
Length [mm]	H	40		53,5	71	78	
Length 2 [mm]	BS	32,5		40	51,5	61,5	62
Total length [mm]	I	171,5	172	181,5	201,5	211,5	
Outer Ø [mm]	AW	320					
Outer Ø 2 [mm]	HD	139					
Max. actuating torque [Nm]	BC	7	10	15	20	25	55
Weight [kg]		28,5	29	28,5	29,2	30	
In stock		✔	✔	✔	✔	✔	✔
Material no.		10001381	10001382	10001383	10001384	10001385	10001386


Segmented clamping bushings
Page 448


Accessory overview
Page 478

Scope of delivery

- Clamping device adapter
- Mandrel without air sensing adapter
- Draw bolt

mandoteX. Machine adapter with short taper / cylinder fit

Short taper A2

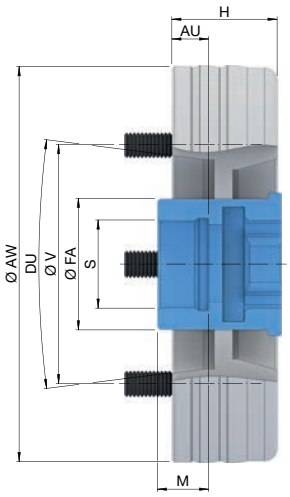

Cylinder fit AP

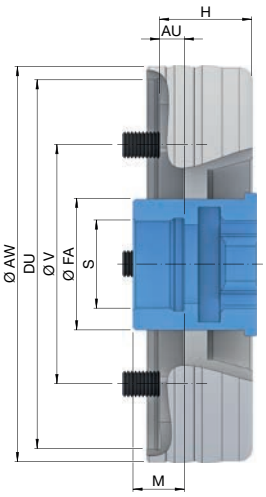

Spindle nose	DU	**A2-5**	**A2-6**	**A2-8**	**AP140**	**AP170**
Outer Ø [mm]	AW	**150**	**165**	**235**	**150**	**180**
Repeatability ≤ [mm]		0,003				
Outer Ø 2 [mm]	FA	50				
Connecting thread inside	S	M35 x 1,5				
Depth of thread [mm]	M	19,5				
Bolt hole circle	V	LK Ø 104,8 [6 x M10]	LK Ø 133,4 [6 x M12]	LK Ø 171,4 [6 x M16]	LK Ø 104,8 [6 x M10]	LK Ø 133,4 [6 x M12]
Length [mm]	H	40			35	
Position in clamped position [mm]	AU	14			9	
In stock		✔	✔	✔	✔	✔
Material no.		10000592	10000593	10000595	10000594	10000596

A2-5 / A2-6 / A2-8: Machine spindle standard DIN ISO 702-1.

Scope of delivery

- Machine adapter
- Bayonet coupling

mandoteX. Clamping device adapter

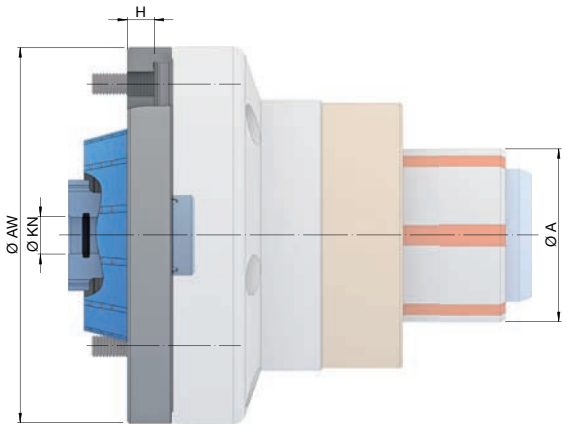

Size		**MANDO XXS – 4 / MAXXOS A – F**
Clamping range [mm]	A	**8 – 120**
Length [mm]	H	10
Air sensing control bore Ø [mm]	KN	14
Outer Ø [mm]	AW	139
In stock		✔
Material no.		10000590

Scope of delivery

- Clamping device adapter
- Bayonet coupling

Mounting screws mandoteX

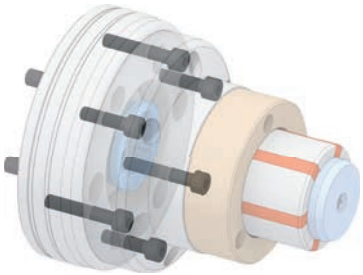

Product	Suitable for	Scope of delivery	In stock	Material no.
Mounting screws	MANDO T211 size 0 – 3 MAXXOS T211 size A – F	3 x M8x30-1, 3 x M8x45-1	✔	10001398
	MANDO T211 size 4 MANDO T212 size XXS – 2 MANDO T812 size XXS – 2	3 x M8x35-1, 3 x M8x50-1	✔	10001399
	MANDO T212 size 3 MANDO T812 size 3	3 x M8x45-1, 3 x M8x60-1	✔	10001400
	MANDO T212 size 4 MANDO T812 size 4	3 x M8x50-1, 3 x M8x65-1	✔	10001401

Savings possibilities

Initial conditions:

- 1 x clamping device change-over / day
- Conventional clamping device change-over incl. adjustment = 35 minutes
- Clamping device change-over with centroteX M = 5 minutes
- Clamping device change-over with centroteX S = 1 minute
- Hourly rate, including machine: 60.00 EUR

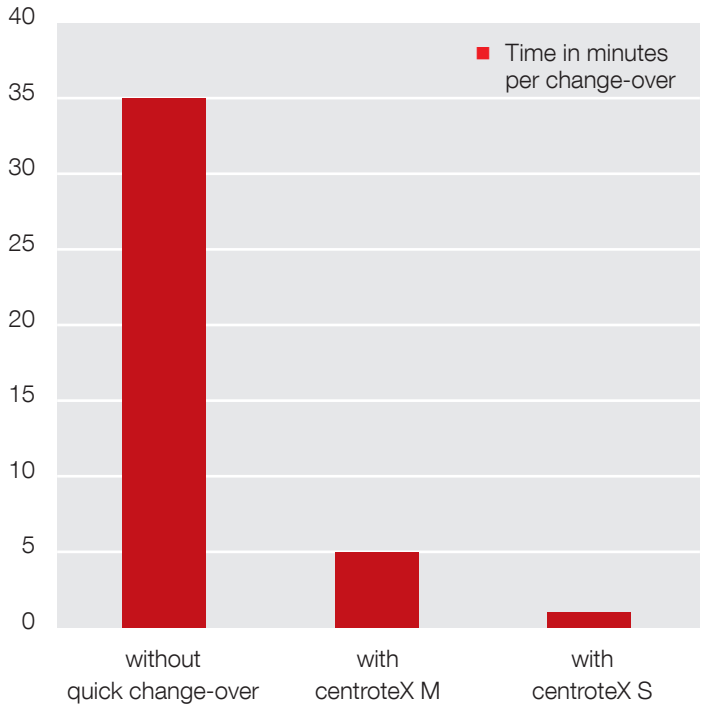

Clamping device change	Costs per month	Costs per year	**Savings per year***
without quick change-over interface	752.50 EUR [35 min. x 21.5 workdays]	9,030.00 EUR [752.50 EUR x 12 months]	–
with centroteX M quick change-over interface	107.50 EUR [5 min. x 21.5 workdays]	1,290.00 EUR [107.50 EUR x 12 months]	**7,740.00 EUR** + an additional 129 work hours [= 16 shifts]
with centroteX S quick change-over interface	21.50 EUR [1 min. x 21.5 workdays]	258.00 EUR [21.50 EUR x 12 months]	**8,772.00 EUR** + an additional 146 work hours [= 18 shifts]

*Based on one change-over per day. The more the change-overs the greater the savings!



Accessories:
Monteq mounting aid for centroteX

A practical support is now available for everyone who must set up heavy clamping devices: the Monteq chuck mounting aid for the centroteX quick change-over system. With the Monteq mounting aid, alignment and handling are easy. Thanks to the spring-loaded bearing arrangement the clamping device can even be lifted by hand, the swiveling holder makes it easy to lock the clamping device in the machine-side bayonet, and with an adjustable screw the clamping device can be adjusted onto the spindle.

Key advantages

- Easy and safe handling of heavy clamping devices
- Short changing times thanks to quick-acting screws
- The clamping device is not suspended diagonally

Monteq in detail

Designation	
1 Weight transference 2 Swivel mechanism for the bayonet 3 Quick-acting bolt for clamping device adapter 4 Spring package for fine height adjustment to the spindle	

Product	Description	In stock	Material no.
Monteq S changing fixture	For fast, easy, safe, and accurate centroteX S clamping device mounting	✔	10015378
Monteq M changing fixture	For fast, easy, safe, and accurate centroteX M clamping device mounting	✔	10000647



The storage container may vary from the image.

Accessories: Storage container

Quick change-over of the clamping device starts with optimal preparation. With our practical storage container you always have everything right at hand. Your clamping devices are safely stored and thus maintain their accuracy.

Key advantages

- All clamping devices are immediately on hand
- Safe storage maintains accuracy and prevents contamination
- The storage container is optimally configured for your clamping devices

CENTREX duo

Centering element for reliable processes



CENTREX duo

Positioning repeatability of the manufactured parts and high process reliability are the top priorities in production. With the CENTREX duo centering system you can easily set up your components. Tedious and time-consuming alignment in the machining of components is therefore a thing of the past. CENTREX duo can be used universally for a wide range of applications.

Key advantages

- Centering element for high-precision positioning of two components
- Extremely high repeatability [≤ 0.003 mm]
- Insensitive to swarf and chips
- Can be flexibly integrated into your own designs, even in the smallest installation space
- Installed in thousands of designs
- Simple handling

Your benefits

- Suitable for a very small installation space
- Can be flexibly integrated in your own designs
- Complex maintenance is not required
- Medium is not required
- Saves time when setting up



CENTREX duo in detail

Designation	
1 Positioning taper 2 Positioning bushing 3 Setting diameter for easy mounting 4 Insertion bevel for easy mounting 5 Rubber for positioning the precision balls 6 Precision balls as centering element 7 Disassembling thread 8 Neck for plane-parallel installation of the positioning taper 9 Insertion bevel for easy mounting	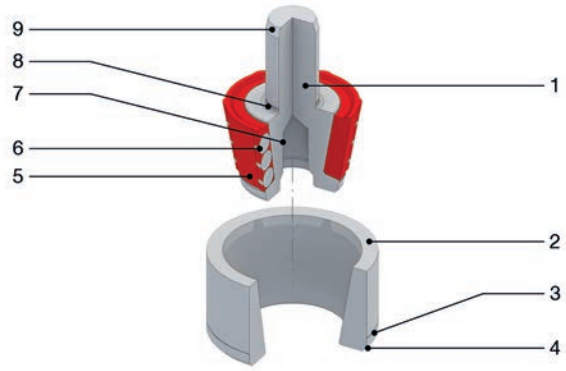

CENTREX duo centering element. Technical data and order overview

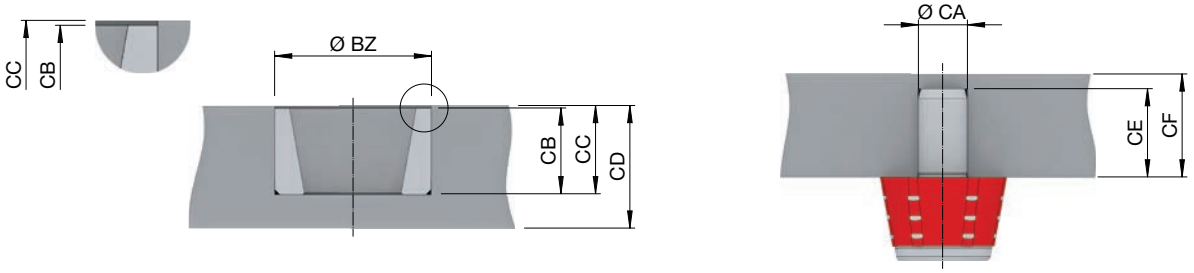

Description		Positioning bushing		Positioning taper	
Size		1	3	1	3
Repeatability ≤ [mm]		0,003			
Weight [kg]		0,01	0,05	0,01	0,04
Bore bushing Ø [mm]	BZ	Ø 16 H7	Ø 32 H7		
Bushing height [mm]	CB	8,5	17,5		
Bore depth	CC	9 [+0,0 | -0,1]	18 [+0,0 | -0,1]		
Min. plate thickness 1 [mm]	CD	12,5	25		
Bore bolt Ø [mm]	CA			Ø 6 H7	Ø 10 H7
Bolt length [mm]	CE			9	18
Min. plate thickness 2 [mm]	KS			12	21
In stock		✔	✔	✔	✔
Material no.		10001504	10001503	10001515	10001514

CENTREX duo application examples

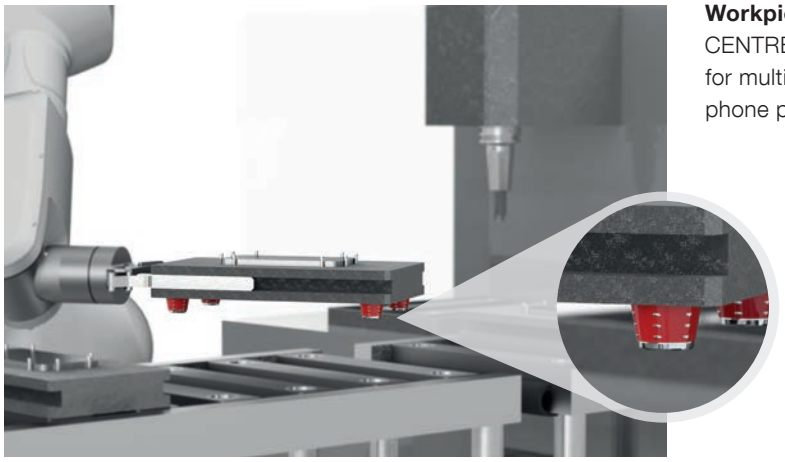

Workpiece carriers
CENTREX duo as a positioning element of workpiece carriers for multiple manu-facturing and assembly stations [e.g. smart-phone production].

User example: Pallet system

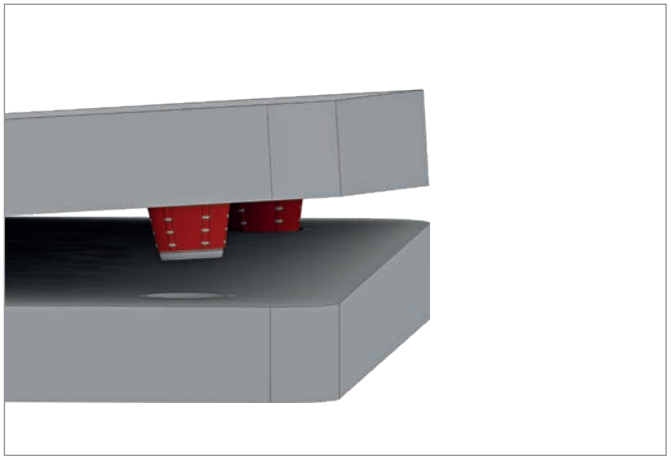

CENTREX duo
- Extremely easy handling
- No tilting when joining and no wear

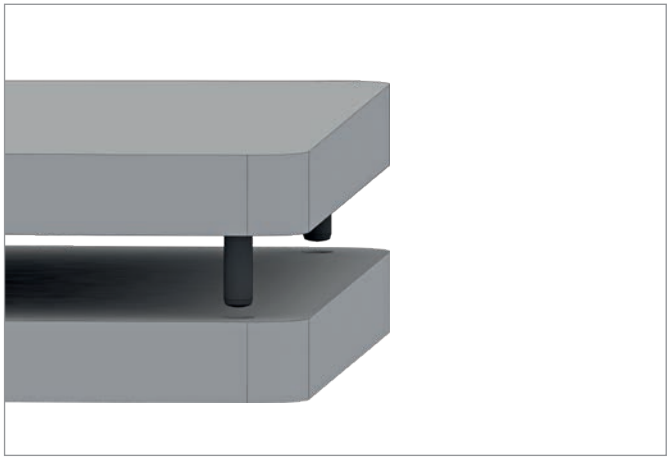

Off-the-shelf centering pin
- Difficult handling, only parallel joining possible
- Tilted and worn out

Special clamping solutions

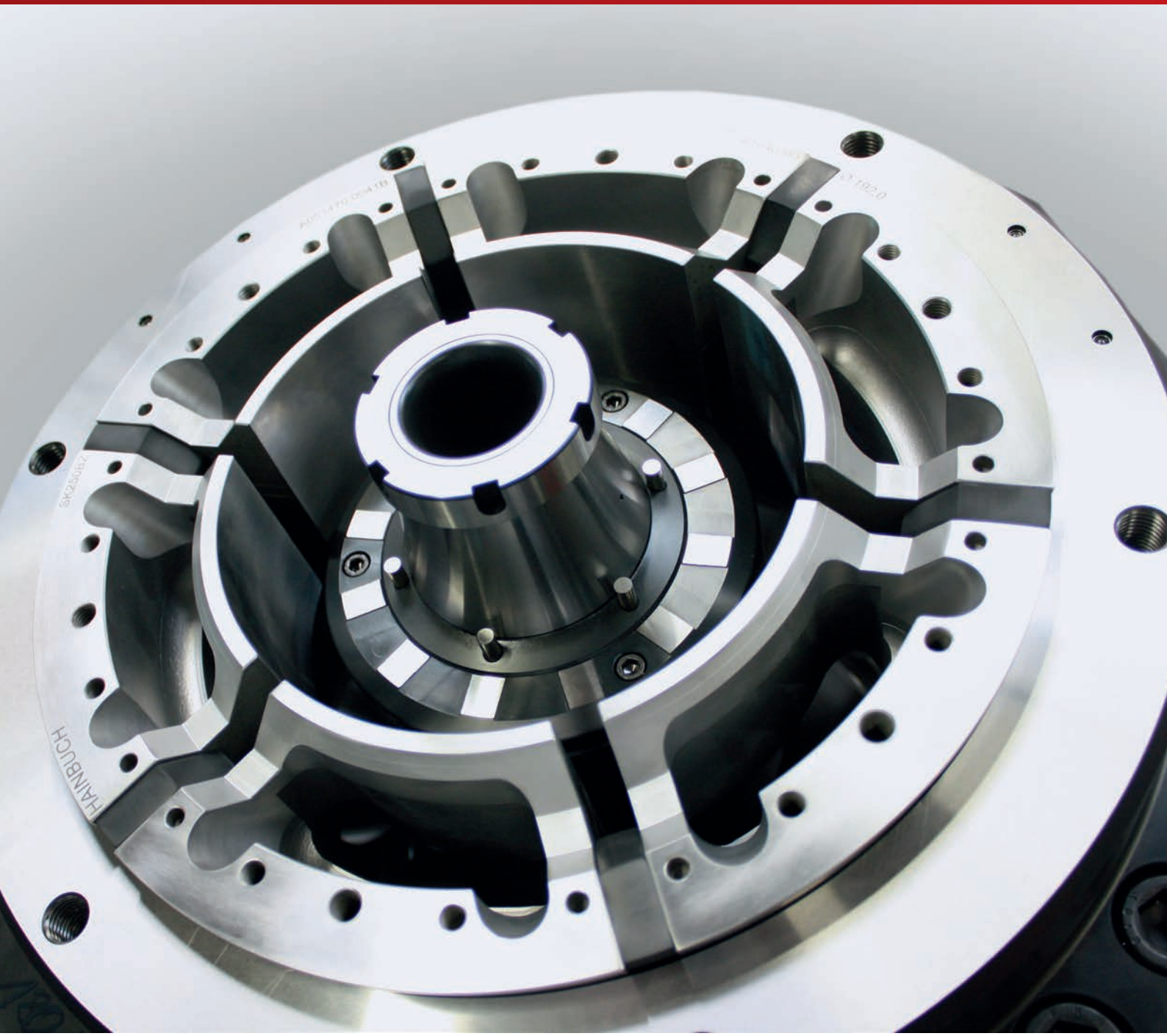



Special solutions

Special chucks	404
Special segmented mandrels	409
Special stationary clamping devices	413
Special test and measurement technology	414
Special clamping elements	415
Special quick change-over systems	416

When standard clamping devices reach their limits, our designers will find the right solution for you. They also develop a solution that is precisely tailored for the most particular requirement. Our experts push the technology to its limits, prefer to leave the beaten paths, think outside of the box, and approach their work with passion, enthusiasm, and inventiveness. The result: an innovative, creative, and completely customized special chuck in the usual HAINBUCH quality.

Key advantages

- Custom solutions optimally tailored to your requirements
- Optimized manufacturing processes
- State-of-the-art manufacturing possibilities due to the latest clamping device technology



SPANNTOP 2x2

- Secure clamping of rectangular / square profiles with uniform transmission of clamping force from all 4 sides
- Tolerance compensation ± 1.0 mm in width and height
- Standard clamping heads can be used for clamping round material as well
- Rigid clamping from 4 sides

Challenge

Workpiece	**Tool holder**
Clamping task	**4-sided clamping from the outside**
Machining	**Milling of the shank and of the head**

- Better workpiece surface
- More rigid clamping

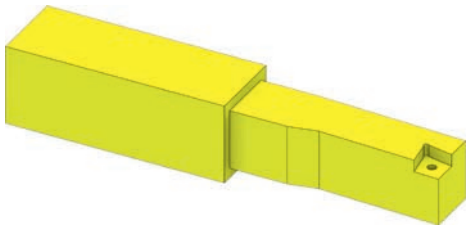

Results / customer benefits

- Better workpiece surfaces in every machining plane
- Higher feed rates

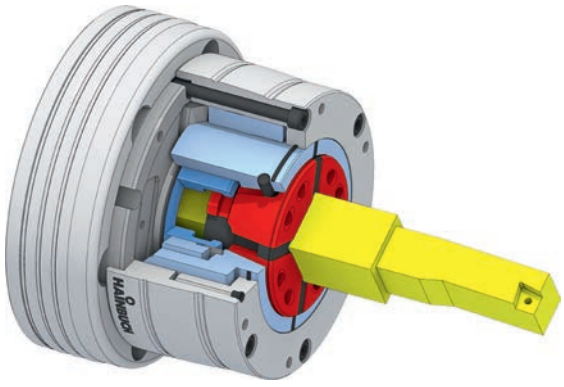

SAVINGS

- Machining time is reduced by 10 %
- Tool life is extended by 5 %



Shaft chuck

- For roughing operations, shafts are clamped with extreme rigidity by the clamping head
- Clamping between centers with the integrated face driver ensures a run-out under 5 µm for finish machining

Challenge

Workpiece	**Thin shaft**
Clamping task	**With clamping head and between centers**
Machining	**Roughing and finish machining in a single process**

- Finishing between centers
- Highest run-out between centers

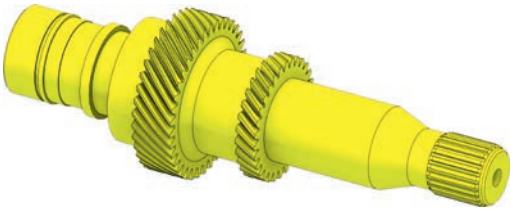

Results / customer benefits

- Higher speeds and feed rates thanks to extremely forceful clamping
- Run-outs between centers are achieved with process reliability

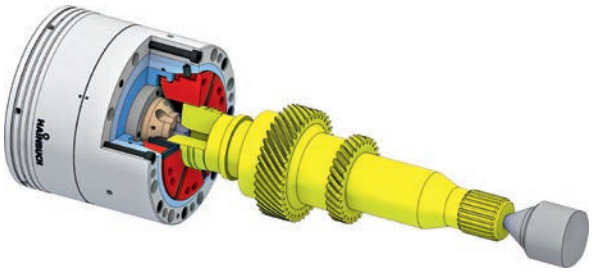

SAVINGS

- 2 clamping set-ups reduced to only one set-up
- The workpiece is produced approx. 8 % faster

Special chucks



TALEMENT chuck

- Almost deformation-free clamping of thin-walled workpieces
- Major formal defects are compensated
- Air actuation
- Can be combined with powerful actuation of the clamping head

Challenge

Workpiece	**CV joint**
Clamping task	**O.D. clamping**
Machining	**Hard machining**

- Rigid support at the machining point
- Position errors of the axis of clamping relative to the support axis are compensated
- Form-compensating support

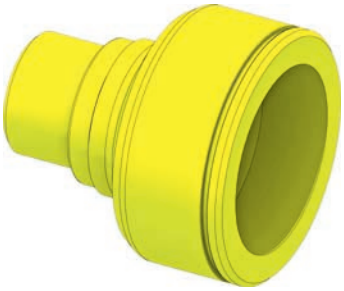

Results / customer benefits

- After hardening, the workpiece remains unmachined on the support surface
- One machining step is eliminated

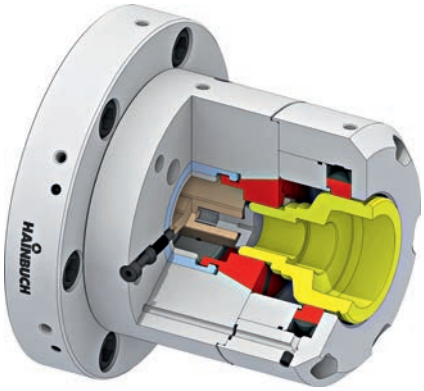

SAVINGS

- Elimination of the work cycle »hard turning of the bell outer Ø« → Savings: approx. 25 seconds per part
- Increased tool life from 800 to 1,200 workpieces→ Savings: approx 30 % of tool costs



Segmented clamping bushing chuck

- Segmented clamping bushing chuck with balance compensation for significantly unbalanced workpieces
- High dimensional tolerance compensation on the blanks

Challenge

Workpiece	**Casting**
Clamping task	**O.D. clamping of a blank**
Machining	**Turning and drilling**

- Centrifugally stable clamping even at high RPM
- Integrated balancing system

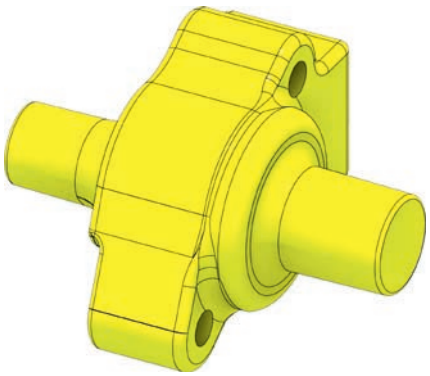

Results / customer benefits

- Thanks to the enclosing clamping device the workpiece remains securely in the clamped position in spite of high RPM
- Highest clamping forces
- Large radial clamping strokes

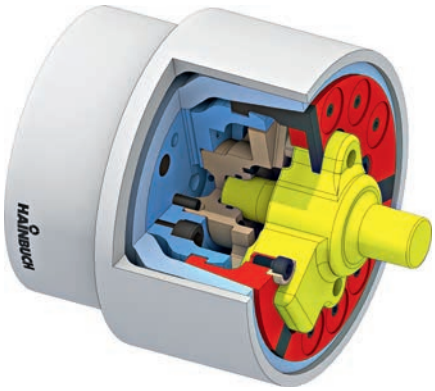

SAVINGS

- Manufacturing with process reliability
- Scrap reduced to »0«

Special chucks



2x2 bolt chuck, centric clamping

- Bolt chuck for raw part centering of a rectangular profile in both axes
- Chip-proof clamping device for mass production

Challenge

Workpiece	**Fork-head**
Clamping task	**O.D. clamping**
Machining	**Turning**

- Compensation of the blank tolerances of 1.5 mm in both clamping directions
- Interrupted cut during turning

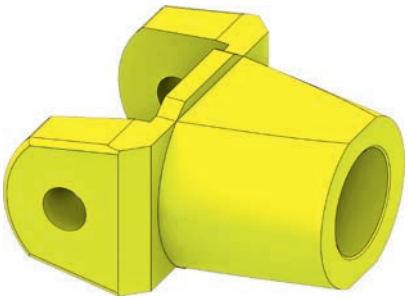

Results / customer benefits

- Low-maintenance clamping device
- Stable and rigid clamping
- Different profiles can be set-up easily

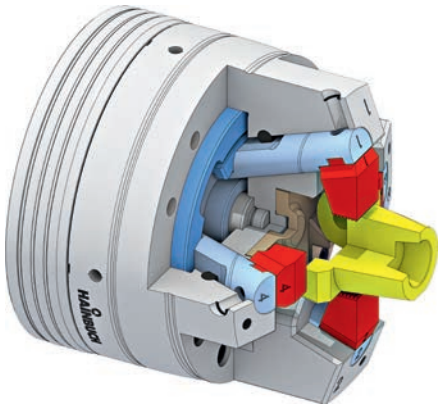

SAVINGS

- The inexpensive pre-process remains the same
- Easy handling of the finished part for further processing thanks to extremely precise symmetry on the component

Special segmented mandrels



Mandrel for gears

- Slim mandrel for gears
- Workpiece specific interference contour with maximum clamping rigidity

Challenge

Workpiece	**Bevel gear**
Clamping task	**I.D. clamping**
Machining	**Gear hobbing**

- Generate the maximum clamping forces in the smallest installation space
- Maximum rigidity
- Suitable for mass production

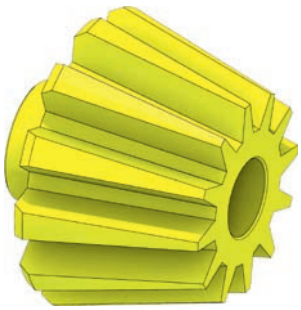

Results / customer benefits

- Stable and reliable process for gear manufacturing
- Large opening stroke to ensure secure loading

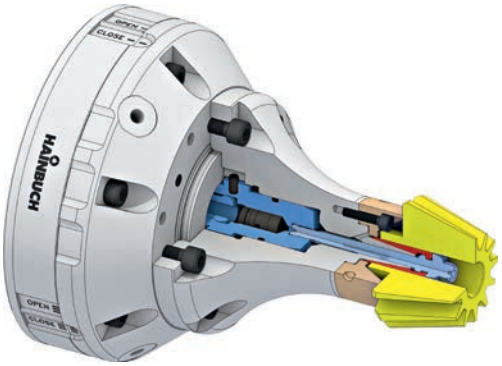

SAVINGS

- Tool life is extended by 5 %
- Manufacturing with process reliability

Special segmented mandrels



Micro mandrel

- Mandrel for I.D. clamping of extremely small diameters [starts at 5.5 mm]
- Fast change-over to other clamping Ø is possible

Challenge

Workpiece	**Gears**
Clamping task	**I.D. clamping**
Machining	**Milling of the gear teeth**

- Mass production of small gears
- Different clamping diameters must be interchangeable
- Long service life of the clamping device

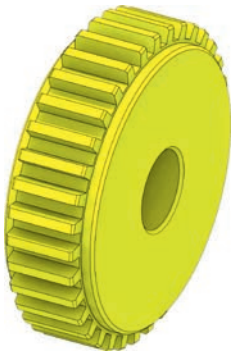

Results / customer benefits

- Service life of the clamping device has been significantly increased
- High-precision change interface provided for clamping device change-over

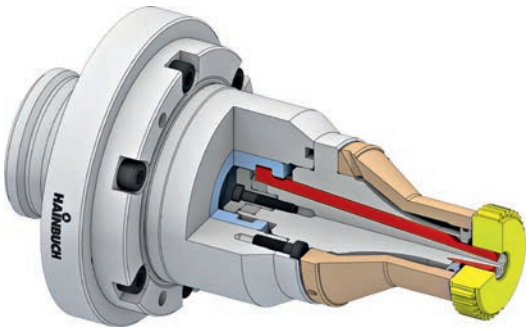

SAVINGS

- Reduction of the annual total investment for clamping devices by approx. € 10,000.00

Special segmented mandrels



Position-compensating I.D. clamping device

- I.D. clamping device for use as torque
- Run-out error between clamping bore and reference center 0.5 mm

Challenge

Workpiece	**Tube shaft**
Clamping task	**Compensating I.D. clamping as torque entrainment**
Machining	**Grinding of the outer contour**

- Inner contour as clamping reference with run-out error to the centers
- Run-outs between centers within 5 µm
- Guided rotation must be position-compensating

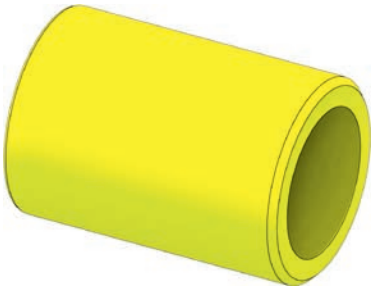

Results / customer benefits

- Run-outs between centers within 3 µm
- Center must only be aligned once

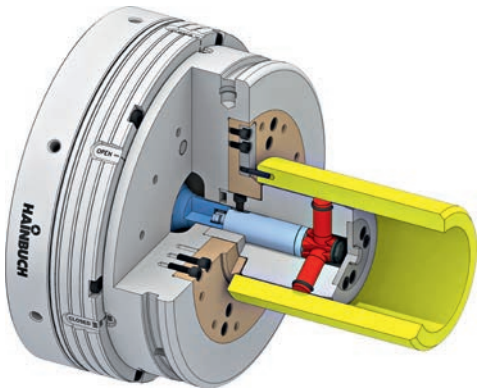

SAVINGS

- Higher feed rates possible → Time savings: 35 %

Special segmented mandrels



Eccentric mandrel, adjustable

- Mandrel for centric and eccentric machining
- Adjusting process via C-axis of the machine

Challenge

Workpiece	**Eccentric sleeve**
Clamping task	**I.D. clamping**
Machining	**Turning**

- Eccentric mandrel adjustment via the C-axis
- Centric and eccentric machining
- Clamping of different workpieces with one mandrel

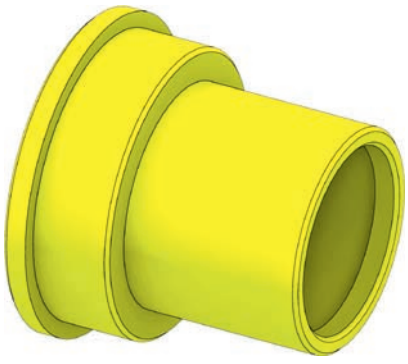

Results / customer benefits

- Adjustable eccentric mandrel with maximum eccentric dimension of 1 mm
- Complete machining of the workpiece with one machine

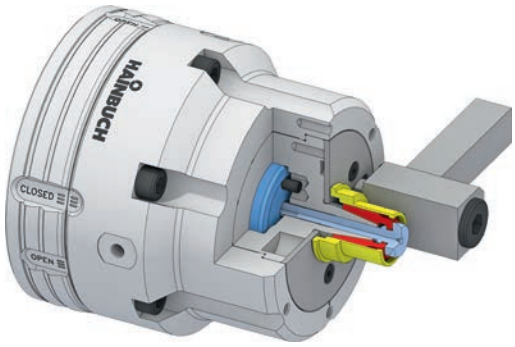

SAVINGS

- Overall process time reduced by approx. 15 %
- Waiting time between the processes reduced to »0«

Special stationary clamping devices



Horizontal stationary chuck

- Hydraulically-actuated stationary chuck that is suitable for 2-sided machining
- High positioning accuracy on the clamping diameter

Challenge

Workpiece	**Shaft**
Clamping task	**Stationary chuck**
Machining	**Milling and drilling**

- Positioning of less than 0.02 mm must be guaranteed
- Accessible from both sides
- High axial machining forces must be safely absorbed

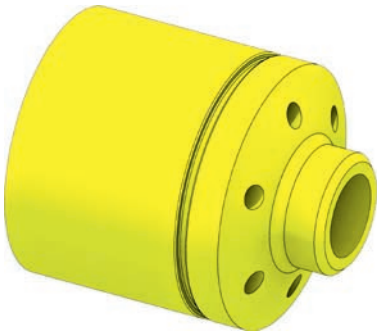

Results / customer benefits

- Manufacturing of both sides of the workpiece in one clamping set-up with process reliability
- Position accuracy of 0.01 mm is achieved



SAVINGS

- Overall manufacturing process time has been reduced by approx. 25 %

Special test and measurement technology



TESTit clamping force measuring device

- Special model for axial draw-in force and documentation of the measurement results
- The application area is the testing of zero-point clamping systems

Challenge

Application area	**Zero-point clamping systems**
Application	**Installation, maintenance, error analysis**
Measuring range	**0 – 10 kN**

- Base plate and carrier pallet [incl. clamping device] of the zero-point clamping system should be tested for function, contamination, and wear on a regular basis
- TESTit simulates the carrier pallet with a draw bolt and measures the axial draw-in force of the base plate

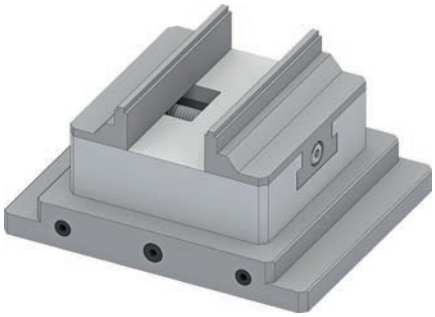

Results / customer benefits

- The actual value of the draw-in force is now known
- Thus timely detection of changes in the draw-in force and the associated contamination or wear
- Active quality monitoring and increased process reliability
- Documentation and archiving of the measurement results

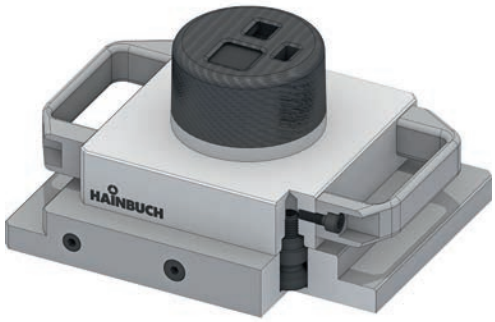

SAVINGS

- Reduction of machine downtimes due to unscheduled maintenance
- No machine crash due to insufficient draw-in force

Special clamping elements



Profile clamping

- For clamping almost every workpiece profile with one clamping head
- With HSW heads the contour is self-producing

Challenge

- Fast availability of profiles is required
- The workpiece should be clamped precisely on its shape

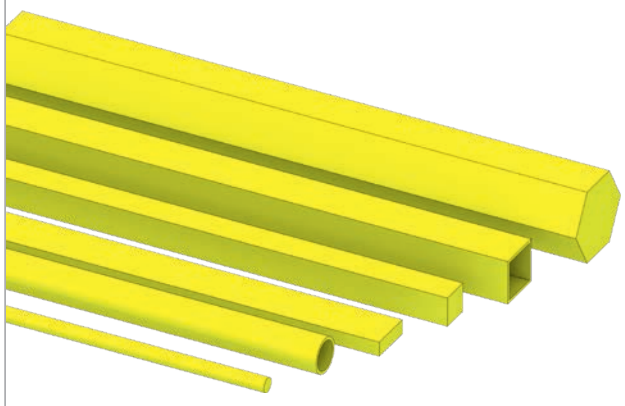

Results / customer benefits

- Fast availability
- Fast set-up
- Inexpensive clamping solution
- Often special clamping devices are unnecessary



SAVINGS

- No special clamping devices are required
- Extremely easy clamping head change-over saves an incredible amount of set-up time

Special quick change-over systems



centroteX for gear cutters

- Quick change-over interface for the change of gear mandrels
- Machine adapter is fluid-actuated, mandrels power-actuated via bayonet coupling
- Vertical insert

Challenge

Spannaufgabe **I.D. clamping**
Spannmittel **Mandrels**

- Support height of workpieces: 505 – 515 mm
- Clamping diameter between 15 and 250 mm
- Run-out accuracy on mandrel below 0.01 mm
- Protection against contamination and cooling lubricants

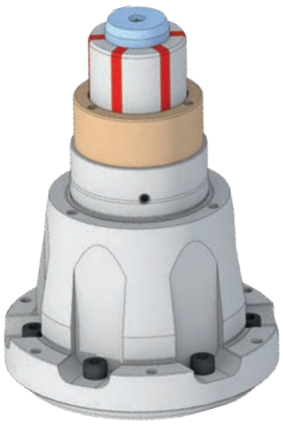

Results / customer benefits

- Fast and versatile change-over of the gear cutter mandrels
- Optimal tension for each workpiece
- Run-out accuracy on mandrel of up to 0.008 mm is possible by alignment
- Central media transfer allows rotation of up to 50 rpm
- Drain holes for dirt and cooling lubricant



SAVINGS

- Greatly reduced set-up time



centroteX for large clamping devices

- Quick change-over interface for the change of jaw chucks up to size 630 and SPANNTOP nova combi deadlength chucks size 100

Challenge

Spannaufgabe **O.D. clamping**
Spannmittel **Jaw chuck & SPANNTOP nova chuck**

- Fast and easy change-over of large chucks
- Maximum precision in clamping devices with high own weight



Results / customer benefits

- ROI of quick change-over system < 1 year
- Simplified handling thanks to Monteq mounting aid
- Repeat accuracy ≤ 0.005 mm



SAVINGS

- Set-up time reduced from 100 to 3 minutes

Overview

Find what's important fast



Clamping elements

	Clamping heads SE/RD	420
	Segmented clamping bushings	440
	Jaws	452



Overview

Find what's important fast



Standard clamping head types

	Clamping head SE	Clamping head RD
		
Variant	SE [hexagonal]	RD [round]
Applications	Raw material clamping, clamping of finished material	Raw material clamping, clamping of finished material
Sizes	26, 40, 52, 65, 80, 100	32, 42, 52, 65, 80, 100, 125, 160
Clamping range of all sizes [mm]	3 – 100	3 – 160
Advantages	■ 25 % higher holding power than clamping head RD [SPANNTOP] ■ Superior resistance to contamination because of the clamping head geometry ■ Unequalled rigidity due to full-surface contact of the clamping segments ■ Run-out accuracy ≤ 0,005 mm possible ■ Longer maintenance intervals ■ Significantly improved wear behavior ■ Active torsional safety	■ Run-out accuracy ≤ 0.01 mm possible ■ Typical HAINBUCH features, such as user friendly set-up, full passage, parallel clamping, optimal power conversion, extreme rigidity and superior holding power, as well as minimal wear and tear
Suitable for	 TOPlus mini  TOPlus premium  TOPlus  TOROK SE  MANOK plus SE  HYDROK SE	 SPANNTOP mini  SPANNTOP nova  TOROK RD  MANOK plus RD  MANOK  HYDROK RD
	Page 422	Page 430

Clamping heads

SE – hexagonal clamping geometry

HAINBUCH SYSTEM

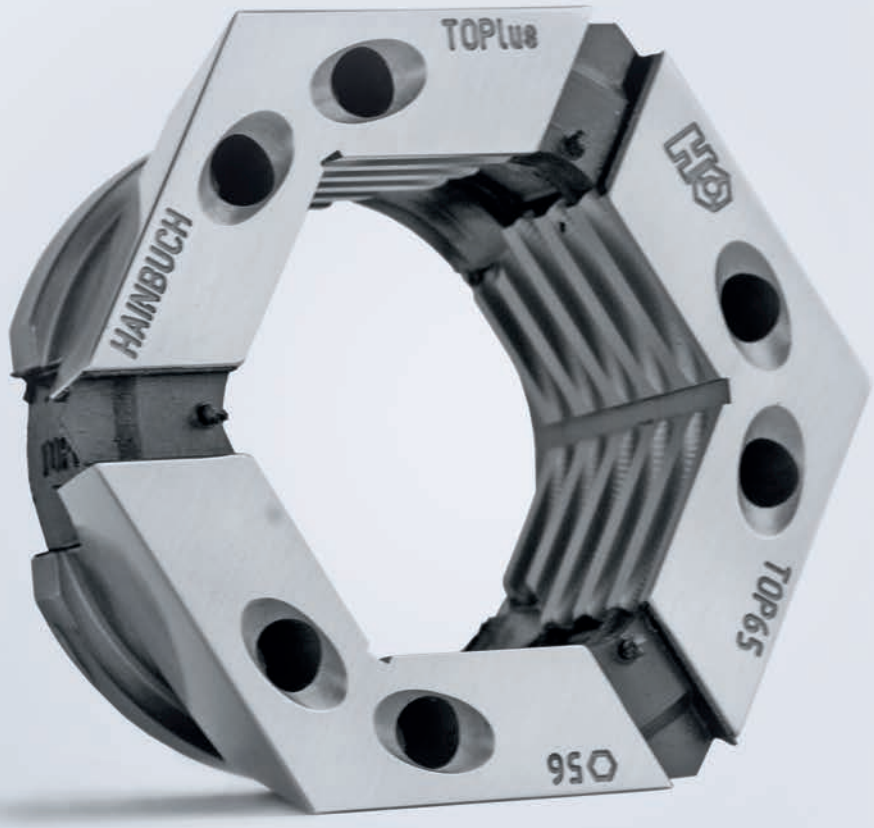

Clamping heads SE

Up to 25% more clamping force and higher output with the same clamping cylinder actuating force that is used to actuate our SPANNTOP chucks. The pyramid arrangement of glide surfaces makes it possible. In addition, the hexagon geometry ensures full-surface contact of the clamping head in the chuck for significantly better resistance to contamination than previous clamping head/chuck systems. Therefore, these clamping heads are even better suited for raw material, cast and forged parts, as well as fine-particle non-ferrous metals such as brass. With a run-out accuracy of ≤ 0.005 mm!

Key advantages

- 25 % higher holding power than clamping head RD [SPANNTOP]
- Superior resistance to contamination because of the clamping head geometry
- Unequalled rigidity due to full-surface contact of the clamping segments
- Run-out accuracy ≤ 0,005 mm possible
- Longer maintenance intervals
- Significantly improved wear behavior
- Active torsional safety

Clamping heads SE

Three SE types

	TOP	TOPG	TOP HSW
			
Applications	For clamping of raw material	For clamping of finished material	For machining to size
Sizes	26, 40, 52, 65, 80, 100	26, 40, 52, 65, 80, 100	40, 52, 65, 80, 100
Clamping range of all sizes [mm]	3 – 100	3 – 100	8 – 90
Clamping surface	Serrated	Smooth	
Material condition	Hard [60 HRC]	Hard [60 HRC]	Hard [60 HRC] / reduced hardness [40 HRC] in the bore
Standard profiles	Round Square Hexagonal	Round	Round
Special - serration	Coarse toothed [Z] Finely serrated [F]		
Definition	TOP = with serration	TOPG = G stands for smooth bore	TOP HSW = HSW stands for machineable

Machining to size of HSW clamping heads

Designation	
1 Chuck 2 HSW clamping head [reduced hardness of 40 HRC in the bore] 3 Loading ring 4 Bolts	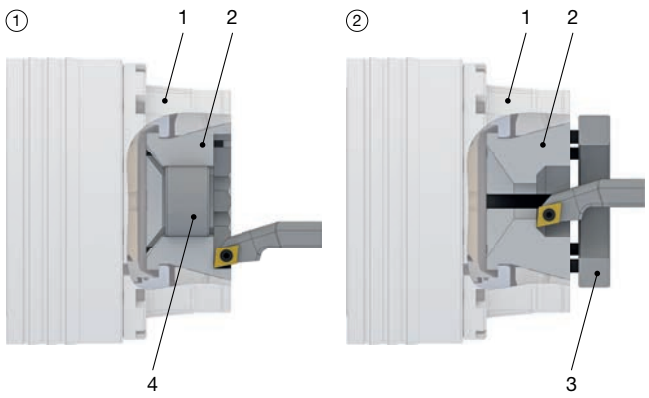

Design of the bore

Standard version	Special serration
Smooth  Clamping with virtually no clamping marks Application example: Clamping of previously machined contours	**F-serration** 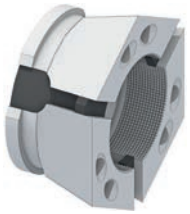 Powerful clamping through scoring the small pointed teeth – with clamping marks Application example: Clamping of raw material
Radial and axial grooves 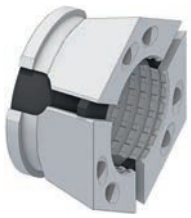 Powerful clamping with clamping marks Application example: Clamping of raw material	**Z-serration**  Powerful clamping through deep scoring of the clamping teeth – with clamping marks Application example: Clamping of raw material [e.g. oxidized, rolled material]
Radial grooves 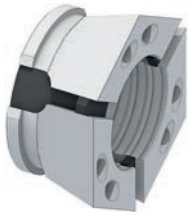 Powerful clamping with clamping marks Application example: Clamping of raw material	

Clamping head TOP. For raw material clamping

Size	Total length [mm]	Particularity	Profile	Increments [mm]	Type of serration	Clamping range [mm]	In stock	Material no.
26	34	Front nose extension	●	1	Smooth	4 - 7	✔	top26r4,0-7,0
						8	✔	top26r8,0
					Radial grooves	9 - 10	✔	top26r9,0-10,0
					Radial and axial grooves	11 - 26	✔	top26r11,0-26,0
			■		Smooth	7	-	top26v7,0
					Radial grooves	8 - 10	-	top26v8,0-10,0
						11 - 18	-	top26v11,0-18,0
			⬢		Smooth	7	-	top26s7,0
					Radial grooves	8 - 10	-	top26s8,0-10,0
						11 - 22	-	top26s11,0-22,0
40	47	Front nose extension	●	1	Smooth	4 - 7	✔	top40r4,0-7,0
					Radial grooves	8	✔	top40r8,0
						9 - 10	✔	top40r9,0-10,0
					Radial and axial grooves	11 - 40	✔	top40r11,0-40,0
			■		Smooth	7	-	top40v7,0
					Radial grooves	8 - 10	-	top40v8,0-10,0
						11 - 27	-	top40v11,0-27,0
			⬢		Smooth	7	-	top40s7,0
					Radial grooves	8 - 10	-	top40s8,0-10,0
						11 - 32	-	top40s11,0-32,0
52	42	No front nose	●	0,5	Smooth	4 - 7,5	✔	top52gr4,0-7,5
					Radial grooves	8	✔	top52r8,0
						8,5 - 10,5	✔	top52r8,5-10,5
					Radial and axial grooves	11 - 52	✔	top52r11,0-52,0
			■	1	Radial grooves	8 - 10	-	top52v8,0-10,0
						11 - 36	-	top52v11,0-36,0
			⬢		Smooth	7	✔	top52s7,0
					Radial grooves	8 - 10	✔	top52s8,0-10,0
						11 - 45	✔	top52s11,0-45,0
65	49	No front nose	●	0,5	Smooth	3 - 7,5	✔	top65gr3,0-7,5
					Radial grooves	8	✔	top65r8,0
						8,5 - 10,5	✔	top65r8,5-10,5
					Radial and axial grooves	11 - 65	✔	top65r11,0-65,0
			■	1	Radial grooves	8 - 10	-	top65v8,0-10,0
						11 - 45	-	top65v11,0-45,0
			⬢		Smooth	7	✔	top65s7,0
					Radial grooves	8 - 10	✔	top65s8,0-10,0
						11 - 56	✔	top65s11,0-56,0
80	49	No front nose	●	1	Smooth	5 - 8	✔	top80gr5,0-8,0
					Radial grooves	8	✔	top80r8,0
						9 - 10	✔	top80r9,0-10,0
					Radial and axial grooves	11 - 80	✔	top80r11,0-80,0
			■		Radial grooves	8 - 10	-	top80v8,0-10,0
						11 - 56	-	top80v11,0-56,0
			⬢		Smooth	7	✔	top80s7,0
					Radial grooves	8 - 10	✔	top80s8,0-10,0
						11 - 68	✔	top80s11,0-68,0
100	59	No front nose	●	1	Radial and axial grooves	15 - 41	-	top100r15,0-41,0
						42 - 100	✔	top100r42,0-100,0
			■	1	Radial grooves	50 - 70	-	top100v50,0-70,0
			⬢			50 - 86	-	top100s50,0-86,0

Explanations of the types of clamping surfaces on the previous pages.

Clamping head TOPG. For clamping of finished material

Size	Total length [mm]	Particularity	Profile	Increments [mm]	Type of serration	Clamping range [mm]	Variant	In stock	Material no.
26	31	No front nose	●	0,5	Smooth	3 - 8	Standard	✔	top26gr3,0-8,0
						8,5 - 26		✔	top26gr8,5-26,0
						10 - 26	Premium	[✔]	top26gr10,0-26,0p5
40	44	No front nose	●	0,5	Smooth	3 - 8	Standard	✔	top40gr3,0-8,0
						8,5 - 40		✔	top40gr8,5-40,0
						10 - 40	Premium	[✔]	top40gr10,0-40,0p5
52	42	No front nose	●	0,5	Smooth	3 - 8	Standard	✔	top52gr3,0-8,0
						8,5 - 52		✔	top52gr8,5-52,0
						10 - 52	Premium	[✔]	top52gr10,0-52,0p5
65	49	No front nose	●	0,5	Smooth	3 - 8	Standard	✔	top65gr3,0-8,0
						8,5 - 65		✔	top65gr8,5-65,0
						10 - 65	Premium	[✔]	top65gr10,0-65,0p5
80	49	No front nose	●	1	Smooth	5 - 8	Standard	✔	top80gr5,0-8,0
						9 - 80		✔	top80gr9,0-80,0
						10 - 80	Premium	[✔]	top80gr10,0-80,0
100	59	No front nose	●	1	Smooth	15 - 41	Standard	-	top100gr15,0-41,0
						42 - 100		✔	top100gr42,0-100,0
						15 - 100	Premium	[✔]	top100gr15,0-100,0p5

Note: For the premium clamping heads, you can choose the desired clamping diameter. Gradations of 0.5 or 1 mm are not necessary.
We manufacture parts to your required diameter with µm precision.

Explanations of types of clamping surfaces on the previous pages.

Clamping head TOP HSW. For machining to size

Size	Total length [mm]	Particularity	Profile	Base bore Ø [mm]	Max. axial drawtube force [pull / push] [kN]	In stock	Material no.
40	47	Face and clamping surface 40 HRC	●	8	33	✔	10013909
				15		✔	10013907
				30		✔	10013908
52	42	Face and clamping surface 40 HRC	●	8	40	✔	10014053
				15		✔	10014051
				30		✔	10014052
65	49	Face and clamping surface 40 HRC	●	5	45	✔	10014346
				8		✔	10014347
				20		✔	10014344
				40		✔	10014345
80	49	Face and clamping surface 40 HRC	●	8	50	✔	10017140
				20		✔	10017141
				40		✔	10017143
				60		✔	10017144
100	59	Face and clamping surface 40 HRC	●	15	65	✔	10013608
				30		✔	10013609
				45		✔	10013610
				65		✔	10013611
				90		✔	10013612

Loading ring [for clamping head TOP HSW]

Size	In stock	Material no.
40	✔	10006622
42/52	✔	10006624
65	✔	10006625
80	✔	10006626
100	✔	10006617

Permissible counter bore when manufacturing to order and for HSW clamping heads. Technical data

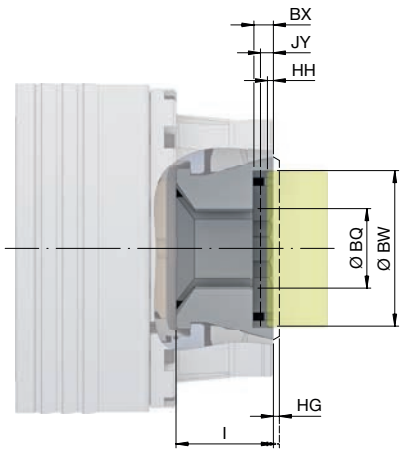

Size	Capacity	Length	Clamping head pro-trusion length	Variant 1 [max. turning Ø]				Variant 2 [max. clamping depth]			
				Max. permissible turning Ø	Max. permissible turning depth	Min. turning depth	Min. clamping depth of workpiece	Max. permissible turning Ø	Max. permissible turning depth	Min. turning depth	Min. clamping depth of workpiece
	BQ	l	HG	BW	BX	JY	HH	BW	BX	JY	HH
TOP 40 / TOP 40 HSW	40	47	3	52	10	9	6	42	22	9	6
TOP 40 G	40	44	0	52	7	6	6	42	19	6	3
TOP 52 / TOP 52 G / TOP 52 HSW	52	42	0	60	12	6,5	3	53,7	14	6,5	3
TOP 65 / TOP 65 G / TOP 65 HSW	65	49	0	78	10	6,5	3	66	25	6,5	3
TOP 80 / TOP 80 G / TOP 80 HSW	80	49	0	91	10	6,5	3	81	25	6,5	3
TOP 100 / TOP 100 G	101,6	59	0	120	20	9	3	103	31	9	3
TOP 100 HSW						16	16			16	16

Clamping heads

RD – the classic clamping head

HAINBUCH SYSTEM



Clamping heads RD

This development represents more than 30 years of SPANNTOP experience. It exploits all the advantages of the latest machine tools. This clamping head is not only extremely powerful, it is also convincing through simple handling. With the changing fixture you set up in no time. The combination of steel and rubber, specially developed by HAINBUCH, in conjunction with a vulcanization that has been perfected over the decades, is designed for maximum speeds and holding power – with optimal run-out, and incredible rigidity and service life.

The original!

Key advantages

- Run-out accuracy ≤ 0.01 mm possible
- Typical HAINBUCH features, such as user friendly set-up, full passage, parallel clamping, optimal power conversion, extreme rigidity and superior holding power, as well as minimal wear and tear

Clamping heads RD

Three RD types

	BZI	BZIG	BZI HSW
			
Applications	For clamping of raw material	For clamping of finished material	For machining to size
Sizes	32, 42, 52, 65, 80, 100, 125, 160	32, 42, 52, 65, 80, 100, 125, 160	32, 42, 52, 65, 80, 100, 125, 160
Clamping range of all sizes [mm]	3 – 160	3 – 160	5 – 130
Clamping surface	Serrated	Smooth	
Material condition	Hard [60 HRC]	Hard [60 HRC]	Hard [60 HRC] / reduced hardness [40 HRC] in the bore
Standard profiles	Round Square Hexagonal	Round	Round
Special - serration	Coarse toothed [Z] Finely serrated [F]		
Definition	BZI = with serration	BZIG = G stands for smooth bore	BZI HSW = HSW stands for machineable

Machining to size of HSW clamping heads

Designation	
1 Chuck 2 HSW clamping head [reduced hardness of 40 HRC in the bore] 3 Loading ring 4 Bolts	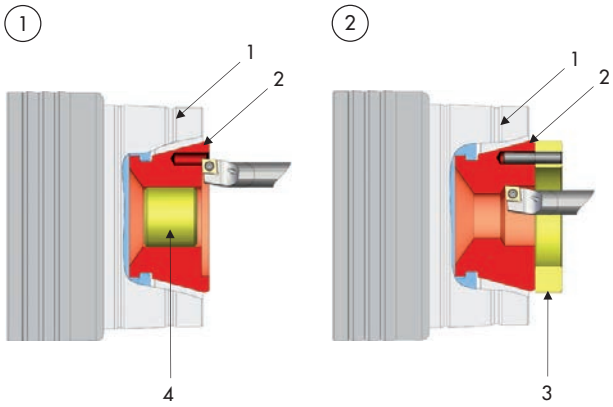

Design of the bore

Standard version	Special serration
Smooth  Clamping with virtually no clamping marks Application example: Clamping of previously machined contours	**F-serration**  Powerful clamping through scoring the small pointed teeth – with clamping marks Application example: Clamping of raw material
Radial and axial grooves  Powerful clamping with clamping marks Application example: Clamping of raw material	**Z-serration**  Powerful clamping through deep scoring of the clamping teeth – with clamping marks Application example: Clamping of raw material [e.g. oxidized, rolled material]
Radial grooves  Powerful clamping with clamping marks Application example: Clamping of raw material	

Clamping heads RD

Clamping head BZI. For raw material clamping

Size	Total length [mm]	Particularity	Profile	Increments [mm]	Type of serration	Clamping range [mm]	In stock	Material no.
32	47	Front nose extension	●	1	Smooth	4,0 - 7,0	✔	sk32bzir4,0-7,0
					Radial grooves	8	✔	sk32bzir8,0
						9,0 - 10,0	✔	sk32bzir9,0-10,0
					Radial and axial grooves	11 - 32	✔	sk32bzir11,0-32,0
			■		Smooth	7	✔	sk32bziv7,0
					Radial grooves	8 - 10	✔	sk32bziv8,0-10,0
						11 - 22	✔	sk32bziv11,0-22,0
			⬢		Smooth	7	✔	sk32bzis7,0
					Radial grooves	8 - 10	✔	sk32bzis8,0-10,0
						11 - 27	✔	sk32bzis11,0-27,0
42	47	Front nose extension	●	0,5	Smooth	4,0 - 7,5	✔	sk42bzir4,0-7,5
					Radial grooves	8	✔	sk42bzir8,0
						8,5 - 10,5	✔	sk42bzir8,5-10,5
					Radial and axial grooves	11 - 42	✔	sk42bzir11,0-42,0
			■	1	Smooth	7	✔	sk42bziv7,0
					Radial grooves	8 - 10	✔	sk42bziv8,0-10,0
						11 - 28	✔	sk42bziv11,0-28,0
			⬢		Smooth	7	✔	sk42bzis7,0
					Radial grooves	8 - 10	✔	sk42bzis8,0-10,0
						11 - 37	✔	sk42bzis11,0-37,0
52	46	Reduced front nose	●	0,5	Smooth	4,0 - 7,5	✔	sk52bzigr4,0-7,5
					Radial grooves	8	✔	sk52bzir8,0
						8,5 - 10,5	✔	sk52bzir8,5-10,5
					Radial and axial grooves	11 - 52	✔	sk52bzir11,0-52,0
			■	1	Radial grooves	8 - 10	✔	sk52bziv8,0-10,0
						11 - 36	✔	sk52bziv11,0-36,0
			⬢		Smooth	7	✔	sk52bzis7,0
					Radial grooves	8 - 10	✔	sk52bzis8,0-10,0
						11 - 45	✔	sk52bzis11,0-45,0
65	58	Front nose extension	●	0,5	Smooth	4,0 - 7,5	✔	sk65bzir4,0-7,5
					Radial grooves	8	✔	sk65bzir8,0
						8,5 - 10,5	✔	sk65bzir8,5-10,5
					Radial and axial grooves	11 - 65	✔	sk65bzir11,0-65,0
			■	1	Radial grooves	8 - 10	✔	sk65bziv8,0-10,0
						11 - 45	✔	sk65bziv11,0-45,0
			⬢		Smooth	7	✔	sk65bzis7,0
					Radial grooves	8 - 10	✔	sk65bzis8,0-10,0
						11 - 55	✔	sk65bzis11,0-55,0
80	53	Reduced front nose	●	1	Smooth	4 - 7	✔	sk80bzigr4,0-7,0
					Radial grooves	8	✔	sk80bzir8,0
						9 - 10	✔	sk80bzir9,0-10,0
					Radial and axial grooves	11 - 80	✔	sk80bzir11,0-80,0
			■		Radial grooves	8 - 10	✔	sk80bziv8,0-10,0
						11 - 56	✔	sk80bziv11,0-56,0
			⬢		Smooth	7	✔	sk80bzis7,0
					Radial grooves	8 - 10	✔	sk80bzis8,0-10,0
						11 - 68	✔	sk80bzis11,0-68,0
100	59	No front nose	●	1	Radial grooves	15 - 24	-	sk100bzr15,0-24,0
					Radial and axial grooves	25 - 41	-	sk100bzr25,0-41,0
						42 - 100	✔	sk100bzr42,0-100,0
			■		Radial grooves	50 - 70	-	sk100bzv50,0-70,0
			⬢	1	Radial grooves	50 - 86	✔	sk100bzs50,0-86,0

Size	Total length [mm]	Particularity	Profile	Increments [mm]	Type of serration	Clamping range [mm]	In stock	Material no.
125	67	Reduced front nose	●	1	Radial and axial grooves	25 - 125	-	sk125bzr25,0-125,0
			■		Radial grooves	25 - 87	-	sk125bzv25,0-87,0
			⬢			25 - 107	-	sk125bzs25,0-107,0
160	63	Reduced front nose	●	1	Radial and axial grooves	27 - 160	-	sk160bzr27,0-160,0
			■		Radial grooves	27 - 112	-	sk160bzv27,0-112,0
			⬢			27 - 137	-	sk160bzs27,0-137,0

Explanations of types of clamping surface on the previous pages.
*Clamping range 36 mm and 37 mm have restricted clamping forces.

Clamping head BZIG. For clamping of finished material

Size	Total length [mm]	Particularity	Profile	Increments [mm]	Type of serration	Clamping range [mm]	In stock	Material no.
32	44	Reduced front nose	●	1	Smooth	3 - 8	✔	sk32bzigr3,0-8,0
						9 - 32	✔	sk32bzigr9,0-32,0
42	42	Reduced front nose	●	0,5	Smooth	3 - 8	✔	sk42bzigr3,0-8,0
						8,5 - 42	✔	sk42bzigr8,5-42,0
52	46	Reduced front nose	●	0,5	Smooth	3 - 8	✔	sk52bzigr3,0-8,0
						8,5 - 52	✔	sk52bzigr8,5-52,0
65	53	Reduced front nose	●	0,5	Smooth	3 - 8	✔	sk65bzigr3,0-8,0
						8,5 - 65	✔	sk65bzigr8,5-65,0
			⬢	1		7 - 10	-	sk65bzigs7,0-10,0
						11 - 55	-	sk65bzigs11,0-55,0
80	53	Reduced front nose	●	1	Smooth	4 - 8	✔	sk80bzigr4,0-8,0
						9 - 80	✔	sk80bzigr9,0-80,0
100	59	No front nose	●	1	Smooth	15 - 41	-	sk100bzgr15,0-41,0
						42 - 100	✔	sk100bzgr42,0-100,0
125	67	Reduced front nose	●	1	Smooth	25 - 125	-	sk125bzgr25,0-125,0
160	63	Reduced front nose	●	1	Smooth	27 - 160	-	sk160bzgr27,0-160,0

Explanations of the types of clamping surfaces on the previous page.

Clamping head BZI HSW. For machining to size

Size	Total length [mm]	Particularity	Profile	Base bore Ø [mm]	Max. axial drawtube force [pull / push] [kN]	In stock	Material no.
32	44	Face and clamping surface 40 HRC	●	5	15	✔	10010676
				10		✔	10010674
				20		✔	10010675
42	42	Face and clamping surface 40 HRC	●	8	18	✔	10010960
				15		✔	10010958
				30		✔	10010959
52	46	Face and clamping surface 40 HRC	●	8	34	✔	10011274
				15		✔	10011272
				30		✔	10011273
65	53	Face and clamping surface 40 HRC	●	3	45	✔	10011663
				5		✔	10011665
				8		✔	10011666
				20		✔	10011662
				40		✔	10011664
80	53	Face and clamping surface 40 HRC	●	8	44	✔	10012160
				20		✔	10012157
				40		✔	10012158
				60		✔	10012159
100	59	Face and clamping surface 40 HRC	●	15	50	✔	10009565
				30		✔	10009566
				45		✔	10009567
				65		✔	10009568
				90		✔	10009569
125	67	Face and clamping surface 40 HRC	●	25	70	✔	10009819
				45		✔	10009821
				70		✔	10009822
				100		✔	10009818
160	63	Face and clamping surface 40 HRC	●	27	100	✔	10010206
				65		✔	10010207
				100		✔	10010204
				130		✔	10010205

Loading ring [for clamping head BZI HSW]

Size	In stock	Material no.
32	✔	10006621
42	✔	10006623
42/52	✔	10006624
65	✔	10006625
80	✔	10006626
100	✔	10006617
125	✔	10006619
160	✔	10006620

Please note:
ar42/52: for clamping heads with two change bores per segment
ar42: for clamping heads with one change bore per segment

Max. permissible counter bores when manufacturing to order and for HSW clamping heads. Technical data

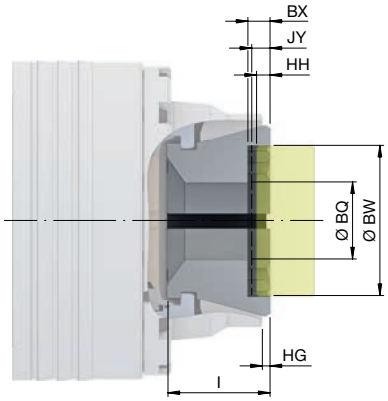

Size	Capacity	Length	Clamping head protrusion length	Variant 1 [max. turning Ø]				Variant 2 [max. clamping depth]			
				Max. permissible turning Ø	Max. permissible turning depth	Min. turning depth	Min. clamping depth of workpiece	Max. permissible turning Ø	Max. permissible turning depth	Min. turning depth	Min. clamping depth of workpiece
	BQ	l	HG	BW	BX	JY	HH	BW	BX	JY	HH
SK 32 BZI	32	47	6	40	14	13	9	35,5	24	13	9
SK 32 BZIG	32	44	3	40	11	10	6	35,5	21	10	6
SK 32 HSW	32	44	3	40	11	10	6	35,5	21	10	6
SK 42 BZI	42	47	9	62	17	15,5	12	45	27	15,5	12
SK 42 BZIG	42	42	4	62	12	10,5	7	45	22	10,5	7
SK 42 HSW	42	42	4	62	12	10,5	7	45	22	10,5	7
SK 52 BZI / SK 52 BZIG	52	46	4	62	14	10,5	7	53,6	18	10,5	7
SK 52 HSW	52	46	4	62	14	10,5	7	53,6	18	10,5	7
SK 65 BZI	65	58	9	78	19	15,5	12	66	34	15,5	12
SK 65 BZIG	65	53	4	78	14	10,5	7	66	29	10,5	7
SK 65 HSW	65	53	4	78	14	10,5	7	66	29	10,5	7
SK 80 BZI / SK 80 BZIG	80	53	4	91	14	10,5	7	81	30	10,5	7
SK 80 HSW	80	53	4	91	14	10,5	7	81	30	10,5	7
SK 100 BZ / SK 100 BZG	100	59	0	117	20	9	3	103	31	9	3
SK 100 HSW	100	59	0	117	20	16	10	103	31	9	3
SK 120 BZ	120	61	3	152	18	9,5	6	141	30	9,5	6
SK 120 HSW	120	61	3	152	18	13,5	10	136	30	9,5	6
SK 125 BZ / SK 125 BZG	127	67	4	167	19	14	7	151	36	14	7
SK 125 HSW	127	67	4	167	19	19	7	151	36	19	12
SK 140 BZ	140	63	5	170	18	12	8	144	36	12	8
SK 140 HSW	140	63	5	170	18	17	13	144	36	17	13
SK 160 BZ	160	63	5	210	12	12	8	188	32	12	8
SK 160 HSW	160	63	5	177	32	14	8	187	32	17	13

Special clamping heads



Special profiles

Do your workpieces include frequently recurring profiles? In these cases, we manufacture special profile clamping heads for you. We are also flexible with regard to the type and execution of the vulcanization. Vulcanization along the bore, for example, is even more effective in sealing the clamping device in the case of critical components. If a special profile is not sufficient, and your workpiece requires an even more customized clamping head, then we will create it for you – custom tailored to your workpiece.

Clamping head unit [SK-Unit]

Since we know how urgently such clamping heads are needed, we formed a special-purpose team: the SK-Unit for special clamping heads. The team consists of experts from different areas, to ensure prompt processing of your inquiry or order. Our goal is that you know within 24 hours when you can expect to receive your special clamping head.

Key advantages

- Benefits of clamping head clamping also in the case of special workpiece geometries
- Special clamping heads with respect to bore profile, front nose extension, clearance hole, vulcanization, etc.
- SK Unit ensures fast response and machining times for special clamping heads
- Exact radially fixed

We offer this service for the following sizes: SK16, SK32, SK42, SK52, SK65, SK80, SK100, SK120, SK125, SK140 as well as TOP26, TOP40, TOP52, TOP65 and TOP100.





Special clamping heads

Overview

Find what's important fast



Standard segmented clamping bushings

	Segmented clamping bushing RD	Segmented clamping bushing SE
		
Variant	RD [round]	SE [hexagonal]
Applications	Raw material clamping, clamping of finished material	Raw material clamping, clamping of finished material
Sizes	XXS, XS, S, 1, 2, 3, 4, 5, 6, 7	A, B, C, D, E, F
Clamping range of all sizes [mm]	8 – 200	18 – 100
Advantages	■ Parallel clamping over the entire clamping length ■ Vibration dampening through rigid steel segments ■ Large clamping ranges due to elastic vulcanization between the segments	■ Run-out accuracy ≤ 0.007 mm possible ■ Unique rigidity through pyramid shape ■ Resistant to contamination through large-surface contact of the clamping segments ■ Active torsional safety ■ Longer maintenance intervals
	Page 442	Page 448

Bushings

RD – round clamping geometry



Segmented clamping bushings RD

In terms of precision, stability, and flexibility the vulcanized segmented clamping bushings are unbeatable. They consist of segments made of chrome/nickel, case hardened steel that is very hard, extremely wear resistant, and rigid [60 HRC]. Plus, they do not have to »bend« to clamp the workpiece. In addition, all functional surfaces are completely ground in one clamping set-up. The result: maximum run-out accuracy, maximum holding power, and long life span.

Key advantages

- Parallel clamping over the entire clamping length
- Vibration dampening through rigid steel segments
- Large clamping ranges due to elastic vulcanization between the segments

Segmented clamping bushings RD

RD models

	MANDO T211 / G211 segmented clamping bushing	MANDO T212 / T812 segmented clamping bushing	MANDO SAD segmented clamping bushing
			
Applications	Raw material / machined part	Raw material / machined part	For machining to size
Sizes	0, 1, 2, 3, 4, 5, 6, 7	XXS, XS, S, 1, 2, 3, 4, 5, 6, 7	XXS, XS, S, 1, 2, 3, 4, 5, 6, 7
Clamping range of all sizes [mm]	20 – 200	8 – 190	18 – 200
Clamping surface	Smooth	Smooth	
Material condition	60 HRC	60 HRC	50 HRC
Standard profiles	Round	Round	Round
Special - serration	Coarse toothed [Z] Finely serrated [F]	Coarse toothed [Z] Finely serrated [F]	
Definition	211 = with draw bolt	212 / 812 = without draw bolt	SAD = for machining to size

Machining the MANDO T211 / G211 SAD segmented clamping bushing to size

Designation	
1 Support ring 2 SAD segmented clamping bushing [reduced hardness of 50 HRC]	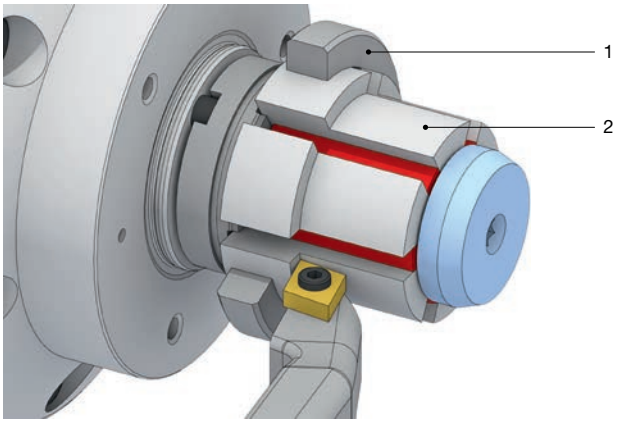

Machining the MANDO T212 / T812 SAD segmented clamping bushing to size

Designation	
1 Support sleeve for SAD segmented clamping bushing 2 Support ring 3 SAD segmented clamping bushing [reduced hardness of 50 HRC]	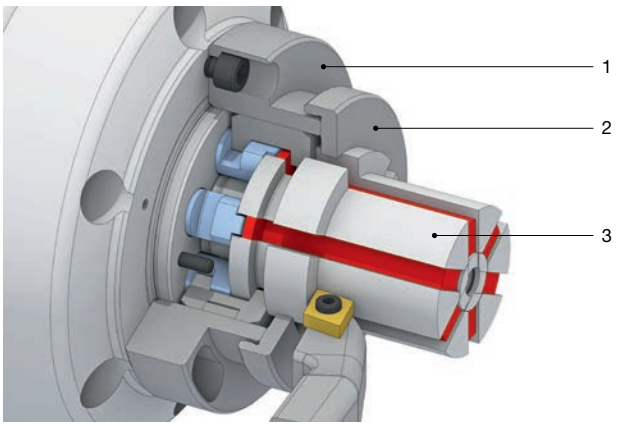

Segmented clamping bushing MANDO T211 / G211

Size	Clamping range [mm]	Range / recommended workpiece tolerance [mm]	Max. clamping length [mm]	Increments [mm]	In stock	Material no.
0	20 - 28	± 0,25	22	0,5	✔	sb100r20,0-28,0
1	26 - 38	± 0,25	26	0,5	✔	sb110r26,0-38,0
2	36 - 54	± 0,25	43	0,5	✔	sb120r36,0-54,0
3	50 - 80	± 0,35	49	0,5	✔	sb130r50,0-80,0
4	69 - 100	± 0,4	59	0,5	✔	sb140r69,0-100,0
	101 - 120			1	-	sb140r101,0-120,0
5	100 - 130	± 0,5	86	1	-	sb150r100,0-130,0
6	130 - 160	± 0,5	96	1	-	sb160r130,0-160,0
7	160 - 200	± 0,5	94	1	-	sb170r160,0-200,0

Segmented clamping bushing size 5, 6, and 7 upon request.
For size 4, clamping range 101 - 120 mm, a max. speed of 4200 RPM applies.

Segmented clamping bushings RD

Segmented clamping bushing MANDO T211 / G211 SAD. For machining to size

Size	Clamping Ø [mm]	Particularity	At least clamping Ø [mm]	Max. clamping length [mm]	In stock	Material no.
0	24	Face and clamping surface 50 HRC	20	22	✔	10008191
	28				✔	10008192
1	32	Face and clamping surface 50 HRC	26	26	✔	10008193
	38				✔	10008194
2	42	Face and clamping surface 50 HRC	36	43	✔	10008195
	48				✔	10008196
	54				✔	10008197
3	56	Face and clamping surface 50 HRC	50	49	✔	10008198
	62				✔	10008199
	70				✔	10008200
	80				✔	10008201
4	76	Face and clamping surface 50 HRC	70	59	✔	10008204
	84				✔	10008205
	92				✔	10008206
	100				✔	10008202
	120			48	✔	10008203
5	110	Face and clamping surface 50 HRC	100	76	✔	10008207
	120				✔	10008208
	130				✔	10008209
6	140	Face and clamping surface 50 HRC	130	84	✔	10008210
	150				✔	10008211
	160				✔	10008212
7	170	Face and clamping surface 50 HRC	160	89	✔	10008213
	180				✔	10008214
	200				✔	10008216

Support ring is included free of charge.

Segmented clamping bushing MANDO T212 and T812

Size	Clamping Ø [mm]	Range / recommended workpiece tolerance [mm]	Max. clamping length [mm]	Increments [mm]	In stock	Material no.
XXS	8	± 0,2	6	0,5	✔	10009234
	8,5		6,7		✔	10009235
	9		7,4		✔	10009236
	9,5		8,1		✔	10009237
	10		8,8		✔	10009227
	10,5		9,4		✔	10009228
	11		10,1		✔	10009229
	11,5		10,8		✔	10009230
	12		11,5		✔	10009231
	12,5		12,2		✔	10009232
	13		12,9		✔	10009233
XS	13 - 19	± 0,25	14	0,5	✔	sb2xsr13,0-19,0
S	16 - 21	± 0,25	15	0,5	✔	sb2sr16,0-21,0
0	20 - 28	± 0,25	21	0,5	✔	sb200r20,0-28,0
1	26 - 38	± 0,25	25	0,5	✔	sb210r26,0-38,0
2	36 - 54	± 0,25	40	0,5	✔	sb220r36,0-54,0
3	50 - 80	± 0,35	44,5	0,5	✔	sb230r50,0-80,0
4	69 - 100	± 0,4	52,5	0,5	✔	sb240r69,0-100,0
5	100 - 130	± 0,5	53	1	-	sb250r100,0-130,0
6	130 - 160	± 0,5	61	1	-	sb260r130,0-160,0
7	160 - 190	± 0,5	63	1	-	sb270r160,0-190,0

Segmented clamping bushing MANDO T212 / T812 SAD. For machining to size

Size	Clamping Ø [mm]	Particularity	At least clamping Ø [mm]	Max. clamping length [mm]	In stock	Material no.
XS	18	Face and clamping surface 50 HRC	13	9	✔	10008259
S	21	Face and clamping surface 50 HRC	16	9,5	✔	10008258
0	24	Face and clamping surface 50 HRC	20	15,5	✔	10008231
	28				✔	10008232
1	32	Face and clamping surface 50 HRC	26	21	✔	10008233
	38				✔	10008234
2	42	Face and clamping surface 50 HRC	36	33	✔	10008235
	48				✔	10008236
	54				✔	10008237
3	56	Face and clamping surface 50 HRC	50	39	✔	10008238
	62				✔	10008239
	70				✔	10008240
	80				✔	10008241
4	76	Face and clamping surface 50 HRC	69	45	✔	10008243
	84				✔	10008244
	92				✔	10008245
	100				✔	10008242
5	106	Face and clamping surface 50 HRC	100	48	✔	10008246
	114				✔	10008247
	122				✔	10008248
	130				✔	10008249
6	136	Face and clamping surface 50 HRC	130	56	✔	10008250
	144				✔	10008252
	152				✔	10008253
	160				✔	10008254
7	170	Face and clamping surface 50 HRC	147	55	✔	10008255
	180				✔	10008256
	190				✔	10008257

Support ring is included free of charge.

Bushings

SE – hexagonal clamping geometry



Segmented clamping bushings SE

The segmented clamping bushing SE with the hexagon socket sits on the clamping pyramid, absolutely form-fitted in every clamping position and thereby enables maximum machining performance with minimal vibration and thus less tool wear. The full-surface contact of the segmented clamping bushing on the mandrel ensures a significantly better insensitivity to contamination than previous segmented clamping bushing/mandrel systems. Therefore, these segmented clamping bushings are even better suited for raw material, cast and forged parts, as well as fine-particle non-ferrous metals such as brass. And they offer this suitability at run-out of ≤ 0.01 mm and in the premium version at ≤ 0.007 mm.

Key advantages

- Run-out accuracy ≤ 0.007 mm possible
- Unique rigidity through pyramid shape
- Resistant to contamination through large-surface contact of the clamping segments
- Active torsional safety
- Longer maintenance intervals

Segmented clamping bushings SE

SE models

	MAXXOS T211 segmented clamping bushing	MAXXOS SAD segmented clamping bushing
		
Applications	Raw material / machined part	For machining to size
Sizes	A, B, C, D, E, F	A, B, C, D, E, F
Clamping range of all sizes [mm]	18 – 100	24 – 100
Clamping surface	Smooth	Smooth
Material condition	60 HRC	60 / 40 HRC
Standard profiles	Round	Round
Special - serration	Coarse toothed [Z] Finely serrated [F]	

Machining the MAXXOS SAD segmented clamping bushing to size

Designation	
1 Mandrel 2 Support ring 3 SAD segmented clamping bushing [reduced hardness of 50 HRC] 4 Draw bolt	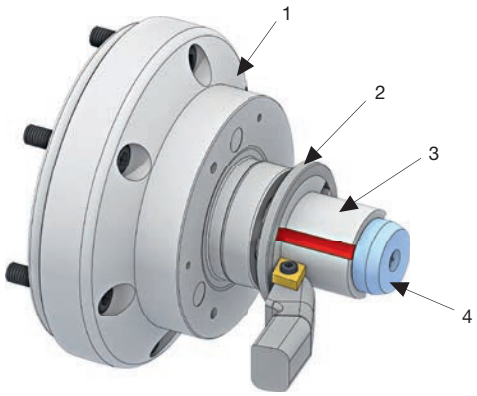

Segmented clamping bushing MAXXOS T211

Size	Clamping range [mm]	Range / recommended workpiece tolerance [mm]	Max. clamping length [mm]	Increments [mm]	Variant	Run-out ≤ [mm]	In stock	Material no.
A	18 - 24	± 0,15	20	0,5	Standard	0,010	✔	sb1ar18,0-24,0
					Premium	0,007	-	sb1ar18,0-24,0p7
B	20 - 32	± 0,15	20	0,5	Standard	0,010	✔	sb1br20,0-32,0
					Premium	0,007	-	sb1br20,0-32,0p7
C	24 - 39	± 0,25	24	0,5	Standard	0,010	✔	sb1cr24,0-39,0
					Premium	0,007	-	sb1cr24,0-39,0p7
D	32 - 50	± 0,3	35	0,5	Standard	0,010	✔	sb1dr32,0-50,0
					Premium	0,007	-	sb1dr32,0-50,0p7
E	39 - 68	± 0,3	45	0,5	Standard	0,010	✔	sb1er39,0-68,0
					Premium	0,007	-	sb1er39,0-68,0p7
F	50 - 100	± 0,3	45	0,5	Standard	0,010	✔	sb1fr50,0-100,0
					Premium	0,007	-	sb1fr50,0-100,0p7

Segmented clamping bushing MAXXOS T211 SAD. For machining to size

Size	Particularity	Clamping Ø [mm]	At least clamping Ø [mm]	Max. clamping length [mm]	In stock	Material no.
A	Face and clamping surface 40 HRC	24	18	20	✔	10008218
B	Face and clamping surface 40 HRC	27	20	20	✔	10008219
		32			✔	10008220
C	Face and clamping surface 40 HRC	33	24	24	✔	10008221
		39			✔	10008222
D	Face and clamping surface 40 HRC	43	32	35	✔	10008223
		50			✔	10008224
E	Face and clamping surface 40 HRC	58	39	45	✔	10008225
F	Face and clamping surface 40 HRC	63	50	45	✔	10008228
E	Face and clamping surface 40 HRC	68	39	45	✔	10008226
F	Face and clamping surface 40 HRC	81	50	45	✔	10008229
		100			✔	10008227

Support ring is included free of charge.

Overview

Find what's important fast



Jaws

Jaws for jaw chucks B-Top and B-Top3 454

Jaws for InoFlex manual / power chuck 458

Jaws for InoFlex centric clamping vise 467

Jaws for jaw modules 472

Jaws for jaw chucks B-Top and B-Top3

Overview jaws for jaw chuck B-Top and B-Top3

	Master jaws	Top jaws, soft	Top jaws, aluminum	Top jaws, hard	Claw jaws, hard	Profiled stepped jaws, hard
				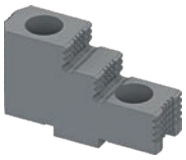		
Jaw type	GBK	SFA	SFA	SHF	SZKA	GST
Description	Master jaws for use with top jaws	Soft top jaws for in-house machining	Soft top jaws with low jaw mass for in-house machining	Hard stepped top jaws with large clamping range	»All-rounders« with maximum clamping range	Hard profiled stepped jaws with large clamping range
Sizes	165, 215, 260, 315	165, 215, 260, 315	165, 215, 260, 315	165, 215, 260, 315	165, 215, 260, 315	165, 215, 260, 315
Workpiece condition	Finished part Raw material	Finished part	Finished part	Raw material	Raw material	Raw material
Clamping possibilities	I.D. and O.D. clamping	I.D. and O.D. clamping	I.D. and O.D. clamping	I.D. and O.D. clamping	I.D. and O.D. clamping	I.D. and O.D. clamping
In-house machining	No	Yes	Yes	No	No	No
Workpiece geometry	Any	Any	Any	Any	Any	Any

Master jaws. Technical data

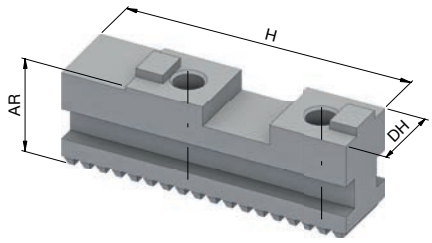

Size		165	215	260	315
Jaw type		GBK 160	GBK 200	GBK 250	GBK 315
Jaw connection		Straight			
Connection		Cross offset			
Length [mm]	H	65	85	104	115
Jaw height [mm]	AR	27,5	29,5	37	43
Jaw width [mm]	DH	20	22	26	32
In stock		-	-	-	-
Material no.		10002116	10002117	10002118	10000094

Top jaws, soft. Technical data

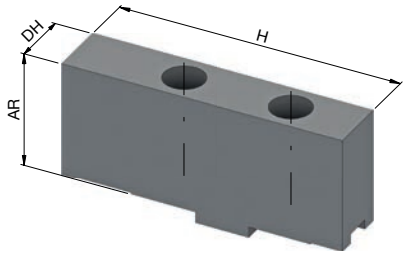

Size		165			
Jaw type		**SFA 160**	**SFA 160-C1**	**SFA 160-C2**	**SFA 160-C3**
Material		16MnCr5			
Jaw connection		Cross offset			
Length [mm]	H	85		63	70
Jaw height [mm]	AR	36	51	36	56
Jaw width [mm]	DH	20	30	35	40
In stock		-	-	-	-
Material no.		10002089	10002090	10002091	10002092

Size		215					
Jaw type		**SFA 200**	**SFA 200-C1**	**SFA 200-C2**	**SFA 200-C3**	**SFA 200-C4**	**SFA 200-C5**
Material		16MnCr5					
Jaw connection		Cross offset					
Length [mm]	H	105	100		70	85	95
Jaw height [mm]	AR	43	51		36	56	76
Jaw width [mm]	DH	22	30	22	40		
In stock		-	-	-	-	-	-
Material no.		10002094	10002095	10002096	10002097	10002098	10002099

Size		260/315							
Jaw type		**SFA 250**	**SFA 250-C1**	**SFA 250-C2**	**SFA 250-C3**	**SFA 250-C4**	**SFA 250-C5**	**SFA 250-C6**	**SFA 250-C7**
Material		16MnCr5							
Jaw connection		Cross offset							
Length [mm]	H	125	90	125				90	
Jaw height [mm]	AR	50	55		75	95	115	55	
Jaw width [mm]	DH	30	40					60	80
In stock		-	-	-	-	-	-	-	-
Material no.		10002101	10002102	10002103	10002104	10002105	10002106	10002107	10002108

Top jaws, aluminum. Technical data

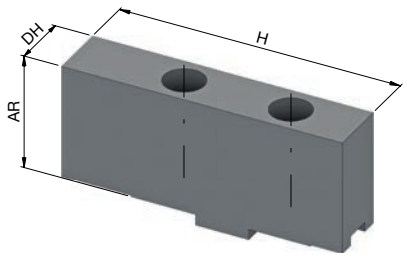

Size		165	215	260/315
Jaw type		**SFA AL160**	**SFA AL200**	**SFA AL250**
Material		Aluminum		
Jaw connection		Cross offset		
Length [mm]	H	85	105	125
Jaw height [mm]	AR	46		55
Jaw width [mm]	DH	25		40
In stock		-	-	-
Material no.		10002093	10002100	10002109

Jaws for jaw chucks B-Top and B-Top3

Top jaws, hard. Technical data

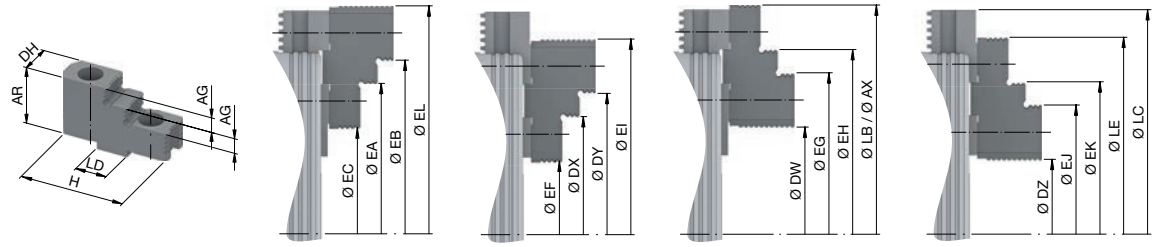

Size		165	215	260/315
Jaw type		**SHF 160**	**SHF 200**	**SHF 250**
Length [mm]	H	63	72	90
Wedge length [mm]	LD	20		
Jaw connection		Cross offset		
Jaw height [mm]	AR	32,5	38	50
Jaw width [mm]	DH	20	22	30
Max. clamping length [mm]	AG	7,5	10	14
Ø clamping range O.D.	DW	23-79	47-127	74-171 / 99-229
Ø clamping range O.D.	DX	62-118	62-142	14-111 / 18-148
Ø clamping range O.D.	DY	81-137	89-169	93-190 / 98-228
Ø clamping range O.D.	DZ	5-61	9-89	10-107 / 15-145
Ø clamping range O.D.	EA	74-130	100-180	77-174 / 102-232
Ø clamping range O.D.	EB	99-155	127-207	157-254 / 182-312
Ø clamping range O.D.	EC	28-84	48-128	
Ø clamping range O.D.	EF	11-67	10-90	
Ø clamping range I.D	EG	78-134	111-191	155-252 / 180-310
Ø clamping range I.D	EH	103-159	138-218	235-332 / 260-390
Ø clamping range I.D	EI	135-191	152-232	173-270 / 179-309
Ø clamping range I.D	EJ	60-116	73-153	91-188 / 96-226
Ø clamping range I.D	EK	85-141	100-180	171-268 / 176-306
Ø clamping range I.D	EL	153-209	190-270	237-334 / 262-392
Ø clamping range I.D	LB	149-205	191-271	
Ø clamping range I.D	LE	131-187	152-232	
Swing Ø	AX	205	271	255-352 / 279-409
Swing Ø 2	LC	192	265	326 / 384
In stock		-	-	-
Material no.		10002086	10002087	10002088

Claw jaws, hard. Technical data

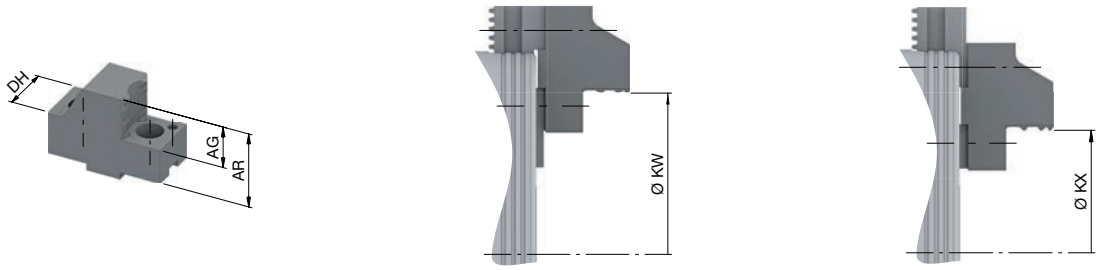

Size		165			215			260/315		
Jaw type		**SZKA 163**	**SZKA 167**	**SZKA 169**	**SZKA 212**	**SZKA 213**	**SZKA 216**	**SZKA 263**	**SZKA 266**	**SZKA 268**
Jaw connection		Cross offset								
Jaw height [mm]	AR	40			45			50		
Jaw width [mm]	DH	30		26		30			40	
Clamping range for master jaw position 1	KW	78-116	123-167	28-68	26-96	97-172	132-207	86-156 / 114-221	143-214 / 143-253	177-247 / 203-313
Clamping range for master jaw position 2	KX	55-98	105-149			59-134	94-196	29-101 / 31-138	87-158 / 60-170	121-192 / 120-230
Max. clamping length [mm]	AG	20			25					
Swing Ø	AX	201			265			326 / 385		
In stock		-	-	-	-	-	-	-	-	-
Material no.		10000010	10002111	10002110	10000040	10000039	10002112	10002113	10002114	10002115

Support bolts for claw jaws

Product	Figure	Height [mm] J	Wrench size [SW] BT	Thread size [M] L	In stock	Material no.
Support bolts for claw jaws	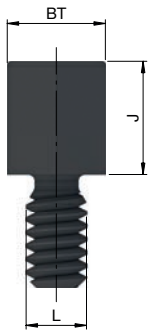	5	10	6	-	10002126
		10			-	20000947
		15			-	10002127
		20			-	10002128
		25			-	10002129

Profiled stepped jaws, hard. Technical data

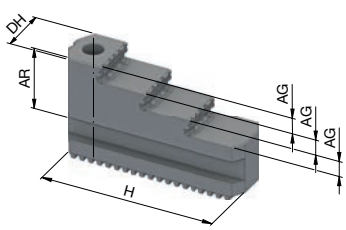

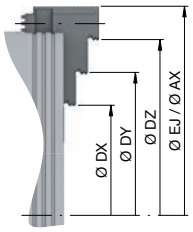

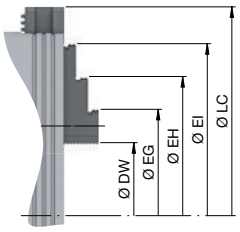

Size		165		215	260	315
Jaw type		**GST 160 I**	**GST 160 II**	**GST 201**	**GST 251**	**GST 315**
Length [mm]	H	58		84,9	107,5	116,3
Jaw height [mm]	AR	22		29	36	32
Jaw width [mm]	DH	20		22	26	32
Max. clamping length [mm]	AG	7		8	10	
Ø clamping range O.D.	DW	13-52	16-50	17-84	20-98	15-125
Ø clamping range O.D.	DX	45-77	49-73	45-120	70-148	82-192
Ø clamping range O.D.	DY	76-108	85-106	92-168	125-202	138-248
Ø clamping range O.D.	DZ	105-138	116-137	140-215	180-256	194-304
Ø clamping range I.D	EG	47-85	50-84	64-130	81-158	76-186
Ø clamping range I.D	EH	77-116	80-113	112-178	136-213	130-240
Ø clamping range I.D	EI	108-147	112-144	160-226	190-263	158-268
Ø clamping range I.D	EJ	136-171	132-165	186-260	242-316	250-360
Swing Ø	AX	135-168	132-171	186-260	242-316	250-360
Swing Ø 2	LC	125-168	132-171	186-260	234-308	248-258
In stock		-	-	-	-	-
Material no.		10002119	10002120	10002121	10002122	10000077

If absolute run-out is required, the hard profiled stepped jaws must be ground on the chuck.

Jaws for InoFlex manual / power chuck

Top jaws for InoFlex VD and VT-S

	Top jaws, soft beveled	Top jaws, soft straight	Top jaws, soft undrilled
	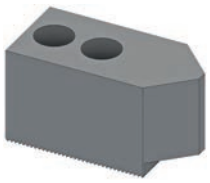	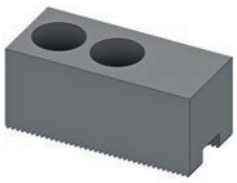	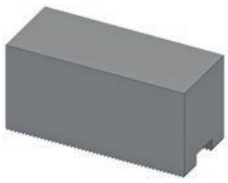
Jaw type	VS	BQ / DJ / BO / DK	HM / HJ
Description	Soft top jaws with beveled clamping surface for in-house machining	Soft top jaws for in-house machining	Soft top jaws without bores for individual shaping
Sizes	165 – 315	165 – 315	215 – 315
Workpiece condition	Finished part	Finished part	Finished part
Clamping possibilities	I.D. and O.D. clamping	I.D. and O.D. clamping	I.D. and O.D. clamping
In-house machining	Yes	Yes	Yes
Workpiece geometry	Round	Any	Any

	Claw jaws, hard	Segmented jaws, soft	Profiled stepped jaws, hard
	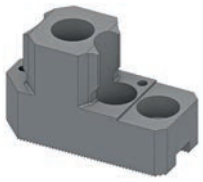		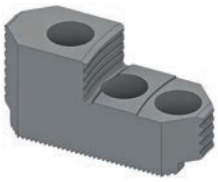
Jaw type	VG	VQ	VU
Description	»All-rounder« with height-adjustable support plate through attachment bolts	Soft segmented jaws for clamping round workpieces that are susceptible to deformation	Hard profiled stepped jaws with large clamping range
Sizes	165 – 315	165 – 315	165 – 315
Workpiece condition	Raw material	Finished part	Raw material
Clamping possibilities	I.D. and O.D. clamping	I.D. and O.D. clamping	I.D. and O.D. clamping
In-house machining	No	Yes	No
Workpiece geometry	Any	Round	Any

Top jaws, soft beveled. Technical data

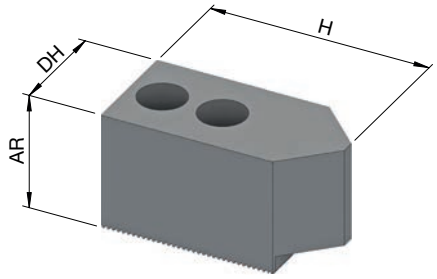

Size		165		215	260/315	
Suitable for		VD / VT-S				
Material		16MnCr5				
Jaw connection		1,5 x 60° [serration]				
Length [mm]	H	80	67	90	106	97
Jaw height [mm]	AR	35	26	48	50	45
Jaw width [mm]	DH	32	24	35	38	37
Clamping range – O.D. clamping, round [mm]		10 – 165	7 – 165	9 – 210	260: 25 – 255 315: 42 – 315	260: 40 – 255 315: 62 – 315
Clamping range – O.D. clamping, square [mm]		7 – 165		8 – 210	260: 22 – 255 315: 41 – 315	260: 38 – 255 315: 60 – 315
Clamping range – I.D. clamping, round [mm]		50 – 165	40 – 165	50 – 210	260: 60 – 255 315: 100 – 315	260: 70 – 255 315: 100 – 315
Clamping range – I.D. clamping, square [mm]		50 – 165	40 – 165	50 – 210	260: 60 – 255 315: 100 – 315	260: 70 – 255 315: 100 – 315
Standard T-slot nut		GP05		GP07	GP11	
In stock		✔	✔	✔	✔	✔
Material no.		10001163	10001164	10001166	10001167	10001168

Set = 4 pieces

Top jaws, soft straight. Technical data

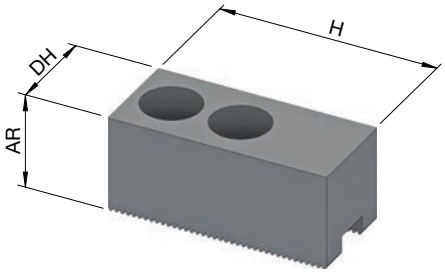

Size		165		215		260/315		
Suitable for		VD / VT-S						
Material		C15						
Jaw connection		1,5 x 60° [serration]						
Length [mm]	H	57		72		90	110	
Jaw height [mm]	AR	25	50	30	60		40	80
Jaw width [mm]	DH	25		30		40		
Standard T-slot nut		GP05		GP07		GP11		
In stock		✔	✔	✔	✔	✔	✔	✔
Material no.		10001169	10001170	10001171	10001173	10001174	10001175	10001176

Set = 4 pieces

Jaws for InoFlex manual / power chuck

Top jaws, soft undrilled. Technical data

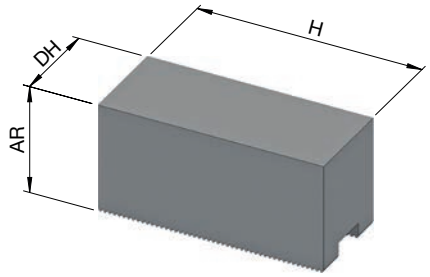

Size		215	260/315		
Suitable for		VD / VT-S			
Material		C15			
Jaw connection		1,5 x 60° [serration]			
Length [mm]	H	72	110		
Jaw height [mm]	AR	80	40	80	125
Jaw width [mm]	DH	30	40		
Standard T-slot nut		GP07	GP11		
In stock		✔	✔	✔	✔
Material no.		10001179	10001184	10001187	10001189

Set = 4 pieces

Claw jaws, hard. Technical data

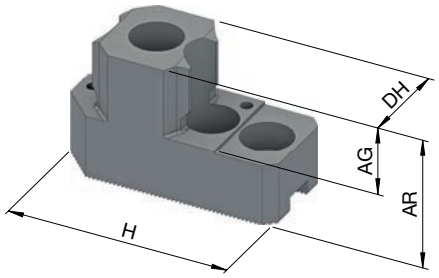

Size		165	215	260		
Suitable for		VD / VT-S		VT-S		
Jaw type		VG10	VG12	LC02-4	LC04-4	LC08-4
Material		16MnCr5				
Jaw connection		1,5 x 60° [serration]				
Length [mm]	H	67	79	115,5	96	79,5
Jaw height [mm]	AR	35	48	59		
Jaw width [mm]	DH	32	35	40		
Clamping range – O.D. clamping, round [mm]		30 – 165	VD: 42 – 210 VT-S: 42 – 205	26 – 68	67 – 109	109 – 151
Clamping range – O.D. clamping, square [mm]		25 – 165	VD: 37 – 210 VT-S: 40 – 203	21 – 66	61 – 105	104 – 148
Clamping range – I.D. clamping, round [mm]		85 – 165	VD: 115 – 210 VT-S: 110 – 210			
Clamping range – I.D. clamping, square [mm]		84 – 165	VD: 108 – 210 VT-S: 109 – 210			
Max. clamping length [mm]	AG	15	25	24	25	
Standard T-slot nut		GP05	GP07	GP11		
In stock		✔	✔	✔	✔	✔
Material no.		10000092	10001194	10001198	10001199	10001200

Jaws for InoFlex manual / power chuck

Size		260			
Suitable for		**VT-S**			
Jaw type		LC13-4	LC17-4	LC20-4	MC06-4
Material		16MnCr5			
Jaw connection		1,5 x 60° [serration]			
Length [mm]	H	64,5		81	98
Jaw height [mm]	AR	59			
Jaw width [mm]	DH	40			
Clamping range – O.D. clamping, round [mm]		150 – 192	192 – 236	227 – 264	
Clamping range – O.D. clamping, square [mm]		147 – 190	190 – 234	225 – 260	
Clamping range – I.D. clamping, round [mm]					85 – 128
Clamping range – I.D. clamping, square [mm]					82 – 126
Max. clamping length [mm]	AG	25			
Standard T-slot nut		GP11			
In stock		✔	✔	✔	✔
Material no.		10001201	10001202	10001203	10001204

Size		260			260/315
Suitable for		**VT-S**			**VD / VT-S**
Jaw type		MC10-4	MC14-4	MC18-4	VG16
Material		16MnCr5			
Jaw connection		1,5 x 60° [serration]			
Length [mm]	H	81,5	65	64,5	109
Jaw height [mm]	AR	59			48
Jaw width [mm]	DH	40			35
Clamping range – O.D. clamping, round [mm]					VD 260: 52 – 255 VD 315: 52 – 315 VT-S 315: 65 – 315
Clamping range – O.D. clamping, square [mm]					VD 260: 48 – 255 VD 315: 48 – 315 VT-S 315: 64 – 315
Clamping range – I.D. clamping, round [mm]		126 – 168	166 – 209	206 – 249	VD 260: 137 – 255 VD 315: 137 – 315 VT-S 315: 149 – 315
Clamping range – I.D. clamping, square [mm]		123 – 166	164 – 207	204 – 247	VD 260: 135 – 255 VD 315: 135 – 315 VT-S 315: 148 – 315
Max. clamping length [mm]	AG	25			
Standard T-slot nut		GP11			
In stock		✔	✔	✔	✔
Material no.		10001205	10001206	10001207	10001197

Set = 4 pieces

Jaws for InoFlex manual / power chuck

Segmented jaws, soft. Technical data

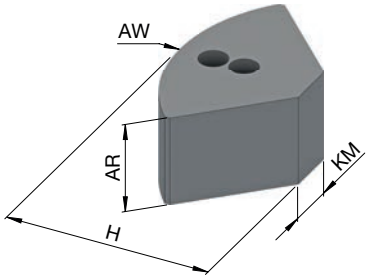

Size		165	215	260	315
Suitable for			**VD / VT-S**		
Jaw type		VQ10	VQ12	VQ16	VQ18
Material		16MnCr5			
Jaw connection		1,5 x 60° [serration]			
Length [mm]	H	70	86	106	135
Jaw height [mm]	AR	66		76	
Outer Ø [mm]	AW	165	210	255	315
Point width [mm]	KM	19,3	34,3	35,9	38,0
Clamping range – O.D. clamping, round [mm]		22 – 165	35 – 215	37 – 260	45 – 315
Clamping range – O.D. clamping, square [mm]		22 – 165	35 – 215	37 – 260	45 – 315
Clamping range – I.D. clamping, round [mm]		70 –165	90 – 215	110 – 260	100 – 315
Clamping range – I.D. clamping, square [mm]		70 –165	90 – 215	110 – 260	100 – 315
Standard T-slot nut		GP05	GP07	GP11	
In stock		✔	✔	✔	✔
Material no.		10001215	10001217	10001219	10001221

Set = 4 pieces

Profiled stepped jaws, hard. Technical data

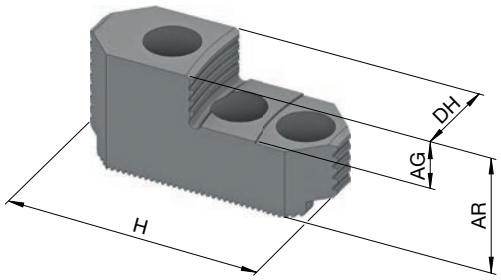

Size		165	215	260/315
Suitable for			**VD / VT-S**	
Jaw type		VU210	VU212	VU216
Material		16MnCr5		
Jaw connection		1,5 x 60° [serration]		
Length [mm]	H	57	68	99
Jaw height [mm]	AR	32	50	
Jaw width [mm]	DH	25	35	40
Clamping range – O.D. clamping, round [mm]		10 – 165	15 – 210	260: 22 – 255 315: 42 – 315
Clamping range – I.D. clamping, round [mm]		77 – 165	104 – 210	260: 120 – 255 315: 140 – 315
Max. clamping length [mm]	AG	13	11	15
Standard T-slot nut		GP05	GP07	GP11
In stock		✔	✔	✔
Material no.		10001212	10001213	10001214

Set = 4 pieces
The design of the chuck jaw can vary from the design shown in the graphic depending on the selected clamping range.

Support bolts for claw jaws. Technical data

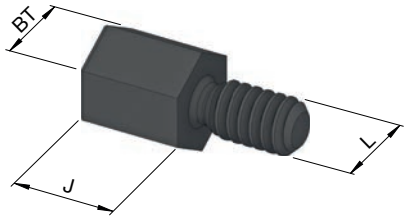

Suitable for		VG16					VG10 / VG12			
Designation		**IT25**	**IT20**	**IT15**	**IT10**	**IT05**	**IR20**	**IR15**	**IR10**	**IR05**
Thread size [M]	L	6					5			
Height [mm]	J	25	20	15	10	5	20	15	10	5
Wrench size [SW]	BT	10					8			
In stock		✔	✔	✔	✔	✔	✔	✔	✔	✔
Material no.		10001278	10001277	10001276	10001275	10001274	10001273	10001272	10001271	10001270

Set = 4 pieces

T-slot nuts. Technical data

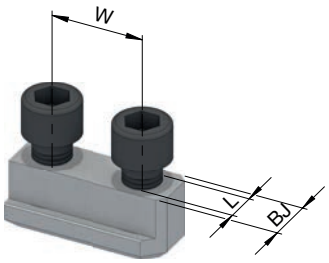

Size		165	215	260	260/315	
Suitable for		VD / VT-S		WT025-04-WV02	VD / VT-S WT031-4-WV05	TM040-4
Designation		GP05	GP07	WN26	GP11	TT20
Material		40NiCrMo6				
Thread size [M]	L	8	10		12	
Groove width [mm]	BJ	10	12	16		
Bolt hole distance [mm]	W	18	20	26	30	25
In stock		✔	✔	✔	✔	✔
Material no.		10001267	10001268	10001336	10001269	10001337

Set = 4 pieces

Jaws for InoFlex manual / power chuck

InoZet pendulum bridge in detail

Designation	
1 T-slot nut for InoZet top jaw 2 InoZet top jaw 3 InoZet pendulum bridge for clamping components that are particularly susceptible to deformation 4 T-slot nut for InoZet pendulum bridge 5 Compensating 4-jaw chuck	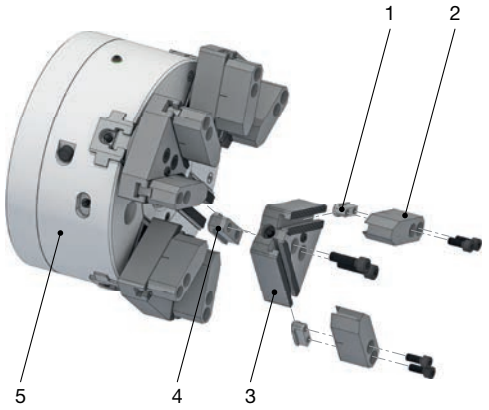

InoZet pendulum bridge. Technical data

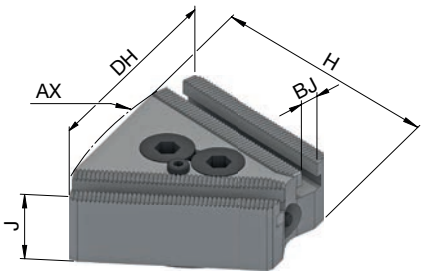

Size		260	315
Suitable for		VD / VT-S	
Jaw type		WT025-04-WV02	WT031-4-WV05
Clamping range – O.D. clamping, round [mm]		63 – 260	82 – 315
Clamping range – I.D. clamping, round [mm]		113 – 260	148 – 315
RPM n max. [1/min.]		2000	1300
Swing Ø	AX	262	336
Jaw width [mm]	DH	120	154
Height without jaws [mm]	KQ	44	51
Length [mm]	H	95	123
Jaw connection		2.0 x 60° [serration]	
Groove width [mm]	BJ	10	
Weight [kg]		8	14,8
In stock		✔	✔
Material no.		10001223	10001224

Set = 4 pieces

Extra T-slot nuts are required for size 260 [see T-slot nuts].
InoZet pendulum bridges must always be lubricated with the appropriate special grease [see Various accessories].

InoZet top jaws, soft beveled. Technical data

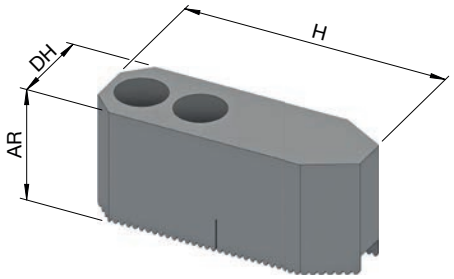

Size		260	315
Suitable for		**VD / VT-S**	
Jaw type		WI10-08	WI12-8
Material		16MnCr5	
Jaw connection		2.0 x 60° [serration]	
Length [mm]	H	80	90
Jaw height [mm]	AR	35	48
Jaw width [mm]	DH	27	35
Standard T-slot nut		GP05	GP07
In stock		✔	✔
Material no.		10001226	10001227

Set = 8 pieces

InoZet claw jaws, hard. Technical data

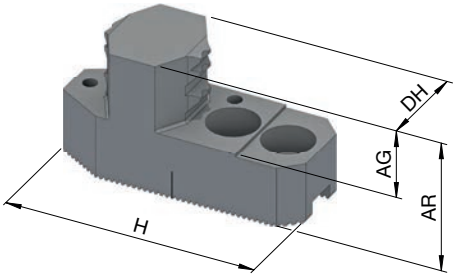

Size		260	315
Suitable for		**VD / VT-S**	
Jaw type		WU10-8	WU12-8
Material		16MnCr5	
Jaw connection		2.0 x 60° [serration]	
Length [mm]	H	74	90
Jaw height [mm]	AR	35	48
Jaw width [mm]	DH	27	35
Max. clamping length [mm]	AG	15	25
Standard T-slot nut		GP05	GP07
In stock		✔	✔
Material no.		10001228	10001229

Set = 8 pieces

Jaws for InoFlex manual / power chuck

InoTop hybrid chuck jaws in detail

Designation	
1 InoTop hybrid chuck jaw for pressureless clamping of thin-walled components 2 T-slot nut 3 Compensating 4-jaw chuck	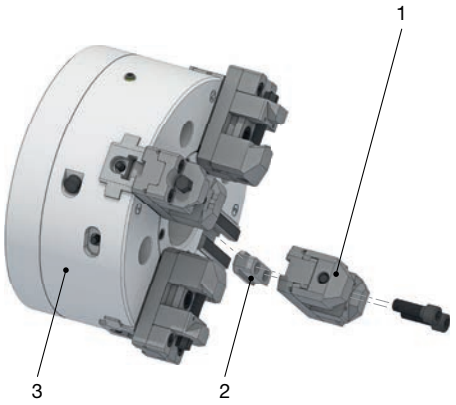

InoTop hybrid chuck jaws, hard. Technical data

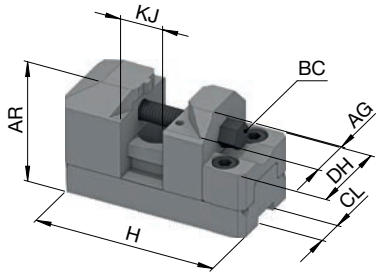

Size		260/315
Suitable for		VD / VT-S
Jaw type		TM040-4
Clamping range – O.D. clamping, round [mm]		VD 260: 170 – 255 VT-S 260: 190 – 264 VD 315: 170 – 315 VT-S 315: 215 – 315
Component wall thickness min. / max. [mm]	KJ	3 – 25
Max. clamping length [mm]	AG	10
Jaw width [mm]	DH	47
Jaw height [mm]	AR	60
Length [mm]	H	103,5
Max. actuating torque [Nm]	BC	30
Jaw connection		2.0 x 60° [serration]
Groove width [mm]	CL	16
Weight [kg]		4,3
In stock		✔
Material no.		10001225

Set = 4 pieces
Extra T-slot nuts are required for InoTop hybrid chuck jaws [See T-slot nuts].

Top jaws for InoFlex VF Selection overview

	Top jaws, soft	Claw jaws, hard	Positive stop jaws, hard smooth
		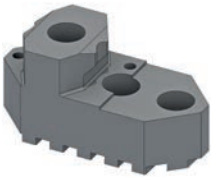	
Jaw type	VP	VR	VCF
Description	Top jaw, that can be individually shaped through milling out	Hard top jaw for versatile implementation	Screw-type positive stop jaw for vise clamping
Sizes	160 / 260	160 / 260	160 / 260
Workpiece condition	Finished part	Raw material	Finished part
Clamping possibilities	I.D. and O.D. clamping	I.D. and O.D. clamping	I.D. and O.D. clamping
In-house machining	Yes	No	No
Workpiece geometry	Any	Any	Angular
Interchangeable support bar	No	No	Yes

	Movable jaws	Movable jaws, hard toothed
		
Jaw type	VCB	VCG
Description	Movable jaw in narrow and wide for clamping of finished material	Movable wide jaw with toothed clamping surface for clamping of raw material
Sizes	160 / 260	160 / 260
Workpiece condition	Finished part	Raw material
Clamping possibilities	I.D. and O.D. clamping	I.D. and O.D. clamping
In-house machining	No	No
Workpiece geometry	Angular	Angular
Interchangeable support bar	Yes	Yes

Jaws for InoFlex centric clamping vise

Top jaws, soft beveled. Technical data

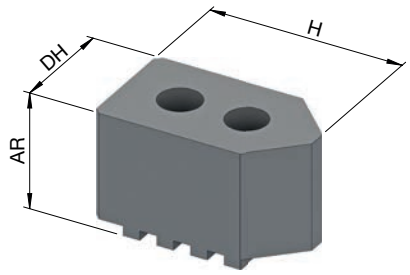

Size		160	260
Suitable for		**VF**	
Jaw type		VP10	VP12
Material		16MnCr5	
Jaw connection		Wedge profile	
Length [mm]	H	63	80
Jaw height [mm]	AR	38	58
Jaw width [mm]	DH	36	48
Clamping range – O.D. clamping, round [mm]		10 – 180	12 – 255
Clamping range – O.D. clamping, square [mm]		8 – 180	10 – 255
Clamping range – I.D. clamping, round [mm]		20 – 212	30 – 291
Clamping range – I.D. clamping, square [mm]		22 – 212	32 – 291
In stock		✔	✔
Material no.		10015013	10015014

Set = 4 pieces

Claw jaws, hard. Technical data

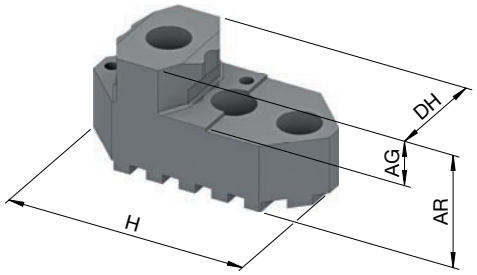

Size		160	260
Suitable for		**VF**	
Jaw type		VR10	VR12
Material		16MnCr5	
Jaw connection		Wedge profile	
Length [mm]	H	79	92
Jaw height [mm]	AR	38	55
Jaw width [mm]	DH	36	48
Clamping range – O.D. clamping, round [mm]		30 – 180	52 – 255
Clamping range – O.D. clamping, square [mm]		28 – 180	48 – 255
Clamping range – I.D. clamping, round [mm]		87 – 215	137 – 255
Clamping range – I.D. clamping, square [mm]		86 – 215	135 – 255
Max. clamping length [mm]	AG	15	25
In stock		✔	✔
Material no.		10015015	10015016

Set = 4 pieces

Positive stop jaws, hard smooth. Technical data

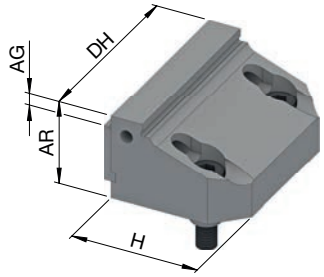

Size		160	260
Suitable for		**VF**	
Jaw type		VCF016	VCF026
Material		16MnCr5	
Length [mm]	H	52	65
Jaw height [mm]	AR	35	45
Jaw width [mm]	DH	77	100
Clamping range – O.D. clamping, square [mm]		30 – 165	60 – 272
Clamping range – I.D. clamping, square [mm]		50 – 185	92 – 291
Max. clamping length [mm]	AG	5	
In stock		✔	✔
Material no.		10015034	10015037

Movable jaws, hard smooth. Technical data

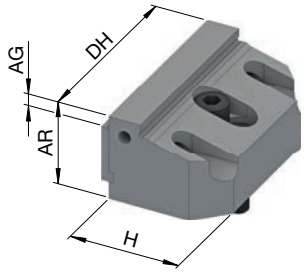

Size		160		260	
Suitable for		**VF**			
Jaw type		VCB016	VCB018	VCB026	VCB028
Material		16MnCr5			
Jaw connection		Wedge profile			
Length [mm]	H	45		64	
Jaw height [mm]	AR	35		45	
Jaw width [mm]	DH	77	36	100	48
Clamping range – O.D. clamping, square [mm]		13 – 185		27 – 291	
Clamping range – I.D. clamping, square [mm]		38 – 185		59 – 291	
Max. clamping length [mm]	AG	5			
In stock		✔	✔	✔	✔
Material no.		10015040	10015045	10015041	10015048

Jaws for InoFlex centric clamping vise

Movable jaws, hard toothed. Technical data

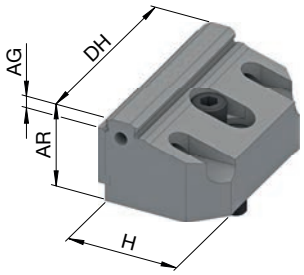

Size		160	260
Suitable for		**VF**	
Jaw type		VCG016	VCG026
Material		16MnCr5	
Jaw connection		Wedge profile	
Length [mm]	H	45	64
Jaw height [mm]	AR	35	45
Jaw width [mm]	DH	77	100
Clamping range – O.D. clamping, square [mm]		13 – 185	27 – 291
Clamping range – I.D. clamping, square [mm]		38 – 185	59 – 291
Max. clamping length [mm]	AG	5	
In stock		✔	✔
Material no.		10015049	10015050

Support bars

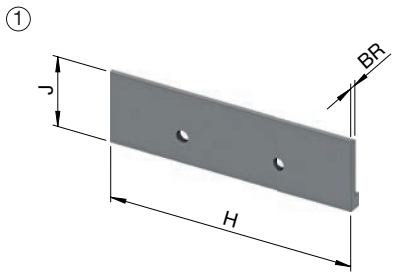

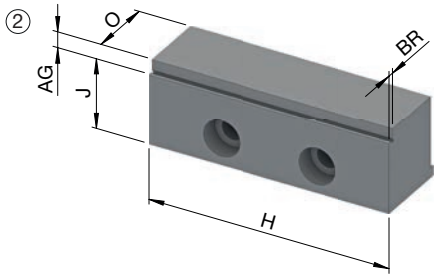

Size		160		260	
Designation		**VCA016**	**VCA017**	**VCA026**	**VCA027**
Type		1	2	1	2
Suitable for		VCB016 / VCF016		VCB026 / VCF026	
Length [mm]	H	77		100	
Height [mm]	J	23	28	29	34
Width [mm]	O		9,8		27,5
Depth [mm]	BR	3	2,7	3	2,5
Max. clamping length [mm]	AG		5		5
In stock		✔	✔	✔	✔
Material no.		10015056	10015059	10015060	10015062

Jaws for InoFlex centric clamping vise

Clamping bar

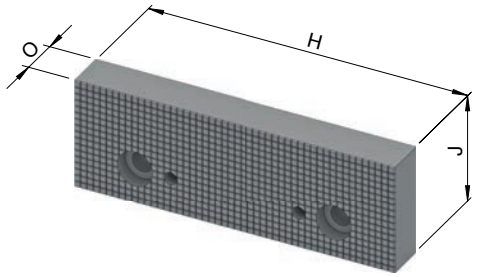

Size		260
Designation		**VCS100**
Suitable for		VCB026 / VCF026
Length [mm]	H	100
Height [mm]	J	34
Width [mm]	O	13
In stock		✔
Material no.		10015063

Jaws for jaw modules

Overview jaws for 3-jaw module

	Top jaws, soft	Radial grooved jaws
		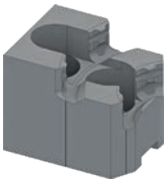
Description	Soft top jaws for in-house machining and in-house milling	Hard radial grooved jaws with max. clamping range
Sizes	145, 215	145, 215
Workpiece condition	Finished part	Raw material
Clamping possibilities	O.D. clamping	O.D. clamping
In-house machining	Yes	No
Workpiece geometry	Round	Round

Top jaws, soft. Technical data

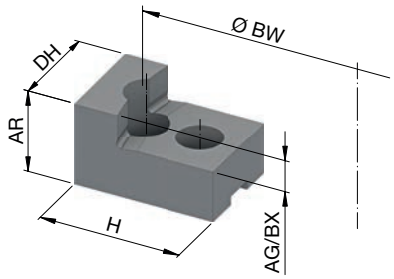

Product		Top jaws, soft
Size		145/215
Jaw connection		1,5 x 60° [serration]
Length [mm]	H	65
Jaw width [mm]	DH	45
Jaw height [mm]	AR	40
Clamping range for size 145 [mm]		25 - 140
Clamping range for size 215 [mm]		25 - 209
Max. clamping length [mm]	AG	15
Max. permissible turning Ø [mm]	BW	140 / 209
Max. permissible turning depth [mm]	BX	15
In stock		✔
Material no.		10000734

Radial grooved jaws. Technical data

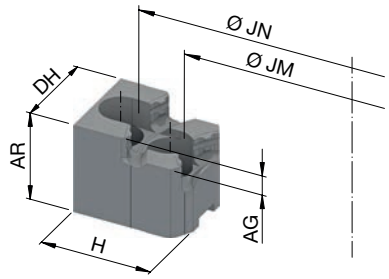

Product		Radial grooved jaws				
Size		145/215				
Jaw connection		1,5 x 60° [serration]				
Length [mm]	H	63	55			
Jaw width [mm]	DH	45				
Jaw height [mm]	AR	46				
Clamping range at counter bore 1 size 145 [mm]	JM	25 - 34	35 - 43	43 - 52	52 - 60	62 - 71
Clamping range at counter bore 2 size 145 [mm]	JN	70 - 79	79 - 89	89 - 99	97 - 107	106 - 116
Clamping range at counter bore 1 size 215 [mm]	JM	25 - 103	35 - 111	43 - 119	52 - 126	62 - 137
Clamping range at counter bore 2 size 215 [mm]	JN	70 - 148	79 - 158	89 - 168	97 - 177	106 - 187
Ø Counter bore 1 side 1 [mm]	JM	25	35	43	52	62
Ø Counter bore 2 side 1 [mm]	JN	70	79	89	97	106
Max. clamping length [mm]	AG	10				
In stock		✔	✔	✔	✔	✔
Material no.		10000725	10000730	10000731	10000728	10000732

Jaws for jaw modules

Overview jaws for 2-jaw module

	Top jaws, soft	Reversible stepped jaws, hard
		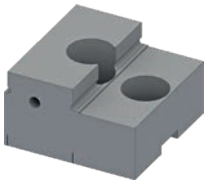
Description	Soft top jaws for in-house machining and in-house milling	Hard reversible stepped jaws with large clamping range
Sizes	215	215
Workpiece condition	Finished part	Raw material
Clamping possibilities	O.D. clamping	O.D. clamping
In-house machining	Yes	No
Workpiece geometry	Any	Any

Top jaws, soft. Technical data

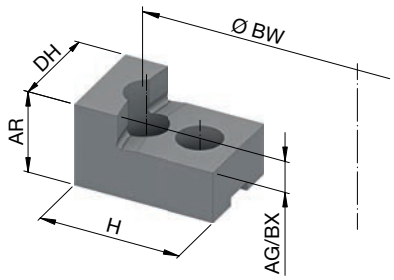

Product		Top jaws, soft
Size		215
Jaw connection		1,5 x 60° [serration]
Length [mm]	H	65
Jaw width [mm]	DH	45
Jaw height [mm]	AR	40
Clamping range [mm]		25 - 209
Max. clamping length [mm]	AG	15
Max. permissible turning Ø [mm]	BW	209
Max. permissible turning depth [mm]	BX	15
In stock		✔
Material no.		10016853

Reversible stepped jaws, soft. Technische Daten

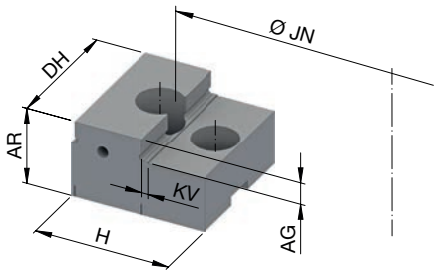

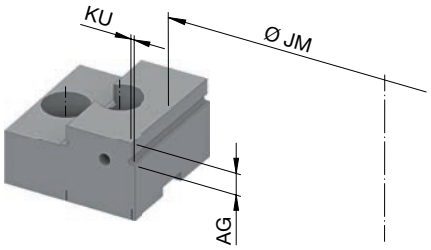

Product		**Reversible stepped jaws, soft**
Size		**215**
Jaw connection		1,5 x 60° [serration]
Length [mm]	H	60
Jaw width [mm]	DH	60
Jaw height [mm]	AR	36
Clamping range at counter bore 1 size 215 [mm]	JM	15 - 96
Clamping range at counter bore 2 size 215 [mm]	JN	95 - 176
Ø Counter bore 1 side 1 [mm]	JM	15
Ø Counter bore 2 side 1 [mm]	JN	95
Support surface for counter bore 1 [mm]	KU	1,5
Support surface for counter bore 2 [mm]	KV	3
Max. clamping length [mm]	AG	10
In stock		✔
Material no.		10016852

Overview

Find what's important fast



Accessories


vario part end-stop system 480


vario quick end-stop system 483


vario flex end-stop system 494


End-stop blanks 496


Front end-stops 502


Chip protection rings 505


Adaptation ring HAINBUCH SYSTEM 508


Insert bushings jaw chuck 510


Clamping head adapter 513


Flanges / drawtube adapters / drawtubes 517


Adapters for air sensing control 524


Base plate for TOROK 526


Adaptation set for MANDO G211 528


Tandem cylinder / base plate for HYDROK 530


Multiple clamping pallets 533


hainBOX storage system 535


Changing fixtures 537


Alignment set 540


Grease 542


Various 545

Quick reference overview

Overview of accessories

		vario part end-stop system	vario quick end-stop system	vario flex end-stop system	End-stop blanks	Front end-stops	Chip protection rings	Adaptation ring HAINBUCH SYSTEM
								
		Page 480	Page 483	Page 494	Page 496	Page 502	Page 505	Page 508
	Chucks							
	Chuck TOPlus mini	X	X	X	X	X	X	
	Chuck TOPlus premium	X	X	X	X	X	X	
	Chuck TOPlus	X	X	X	X	X	X	
	Chuck SPANNTOP mini	X	X	X	X	X	X	X
	Chuck SPANNTOP nova	X	X	X	X	X	X	
	Manual chuck TOROK	X	X			X		
	Jaw chuck B-Top							
	Jaw chuck B-Top3							
	Eccentric chuck							
	InoFlex VD							
	InoFlex VT-S							
	Mandrels							
	Mandrel MANDO				X			
	Mandrel MANDO G							
	Mandrel MAXXOS				X			
	Mandrel actuating units ms dock / hs dock							
	Stationary clamping devices							
	Manual stationary chuck MANOK				X			
	Manual stationary chuck MANOK plus	X	X			X		
	Hydraulic stationary chuck HYDROK					X		
	InoFlex VF							
	Adaptation clamping devices							
	MANDO Adapt [mandrel adaptation]				X			
	Jaw module							
	Face driver / morse taper adaptation							
	Magnet module							
	Clamping elements [clamping heads]							
	Clamping heads SE							
	Clamping heads RD							
	Clamping heads with special profiles							

Customer-specific adaptations and other accessories available upon request.

Quick reference overview

Insert bushings jaw chuck	Clamping head adapter	Flanges / drawtube adapters / drawtubes	Adapters for air sensing control	Base plate for TOROK	Adaptation set for MANDO G211	Tandem cylinder / base plate for HYDROK	Multiple clamping pallets	hainBOX storage system	Changing fixtures	Alignment set	Grease	Various
												
Page 510	Page 513	Page 517	Page 524	Page 526	Page 528	Page 530	Page 533	Page 535	Page 537	Page 540	Page 542	Page 545
	X	X								X	X	X
	X	X								X	X	X
	X	X								X	X	X
	X	X									X	X
	X	X									X	X
	X	X		X							X	X
X		X									X	X
X		X									X	X
		X									X	X
		X									X	X
		X									X	X
		X	X								X	X
		X			X						X	X
		X	X		X						X	X
					X		X				X	X
	X										X	X
	X										X	X
	X					X	X				X	X
											X	X
											X	X
											X	X
												X
								X	X		X	
								X	X		X	
								X	X		X	

End-stop system vario part



End-stop system vario part

The vario part is an extremely rigid and precise end-stop system that functions like a gauge block box. With the ground gauge discs the clamping length can be determined with millimeter accuracy. Thus, in principle you already have the suitable end-stop ready in the drawer – and this saves valuable work preparation time.

The offered sets can be extended as desired with further end-stop plates.

Key advantages

- Standardized workpiece end-stops
- Proven and well-known system with gauge discs
- Through gauge discs the clamping length is flexibly adjustable and adaptable to the workpiece in 1 mm increments
- Can be used rotating and stationary
- Practical storage box

Your benefits

- End-stop design is virtually unnecessary
- Faster set-up
- Multiple use through modular structure

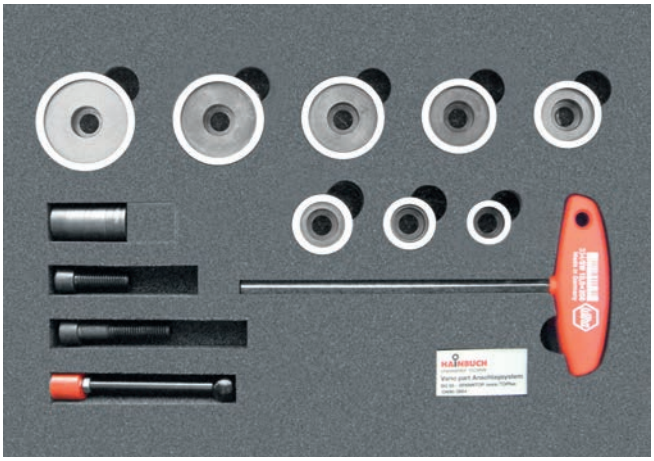

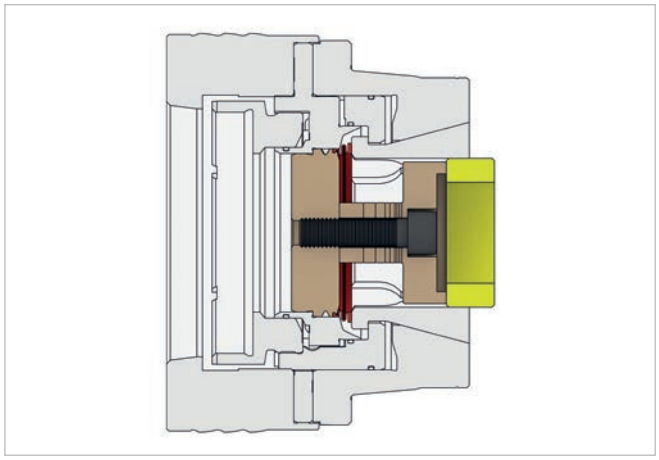

vario part in detail

Designation	
1 Base plate 2 Gauge discs 3 End-stop plate 4 Chip protection ring [not included in the scope of delivery]	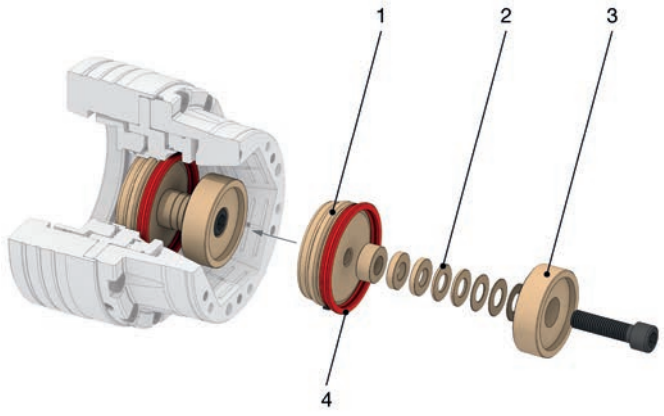

vario part SETS. Order overview

Size	Suitable for	In addition to the basic equipment* set also contains	In stock	Material no.
32	SPANNTOP mini	End-stop plate Ø 29 mm	✔	10000440
	SPANNTOP nova		✔	10000399
40	TOPlus mini TOPlus premium	End-stop plate Ø 29 / 34 mm	✔	10000442
42	SPANNTOP mini	End-stop plate Ø 29 / 39 mm	✔	10000443
	SPANNTOP nova		✔	10000400
52	TOPlus mini TOPlus premium SPANNTOP mini	End-stop plate Ø 29 / 39 / 49 mm	✔	10000445
	TOPlus SPANNTOP nova		✔	10000401
	TOROK steel SE/RD TOROK CFK SE/RD MANOK plus CFK SE/RD		✔	10000449
65	TOPlus mini TOPlus premium SPANNTOP mini	End-stop plate Ø 29 / 39 / 49 / 59 mm Chip protection ring	✔	10019018
	TOPlus SPANNTOP nova		✔	10019023
	TOROK steel SE/RD TOROK CFK SE/RD		✔	10019025
	MANOK plus SE/RD MANOK plus CFK SE/RD		✔	10019024

End-stop system vario part

Size	Suitable for	In addition to the basic equipment* set also contains	In stock	Material no.
80	TOPlus mini TOPlus premium SPANNTOP mini	End-stop plate Ø 29 / 39 / 49 / 59 / 69 / 79 mm Chip protection ring	✔	10019020
	SPANNTOP nova		✔	10019026
	TOROK steel RD		✔	10019117
100	TOPlus mini TOPlus premium SPANNTOP mini	End-stop plate Ø 49 / 59 / 69 / 79 / 89 mm Chip protection ring	✔	10019021
	TOPlus combi pull-back SPANNTOP nova combi pull-back		✔	10019027
	TOPlus combi deadlength SPANNTOP nova combi deadlength		✔	10019028
	TOROK SE/RD		✔	10019029

* Basic equipment: Allen wrench, gauge discs, base plate and a magnet.

Supplemental end-stop plates for vario part [included in some sets]

Product	Figure	End-stop outer Ø [mm] AZ	In stock	Material no.
End-stop plate	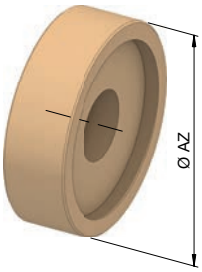	29,0	✔	10000419
		34,0	✔	10000426
		39,0	✔	10000420
		44,0	✔	10000427
		49,0	✔	10000421
		54,0	✔	10000428
		59,0	✔	10000422
		64,0	✔	10000429
		69,0	✔	10000423
		74,0	✔	10000430
		79,0	✔	10000424
		84,0	✔	10000431
		89,0	✔	10000425
		94,0	✔	10000432



End-stop system vario quick

Vario quick is an end-stop system with standardized adjustable workpiece end-stops. It saves valuable work preparation time and gives you significantly more flexibility. Since you always have the required clamping length on hand – without having to produce the end-stops yourself.

The clamping length is set for the end-stop screws / blank screws via a threaded spindle. One half turn corresponds to 1 mm adjustment travel.

The sets can be extended individually with separately available end-stop screws and blank screws. The vario quick end-stop system can also be used stationary under specific conditions [table bore required]. As an alternative, we recommend our vario part system.

Key advantages

- Standardized workpiece end-stops
- End-stop depth can quickly be adjusted in 1 mm increments
- End-stop blanks available
- Can be used rotating and stationary
- Practical storage box

Your benefits

- End-stop design is virtually unnecessary
- Faster set-up
- Multiple use through modular structure

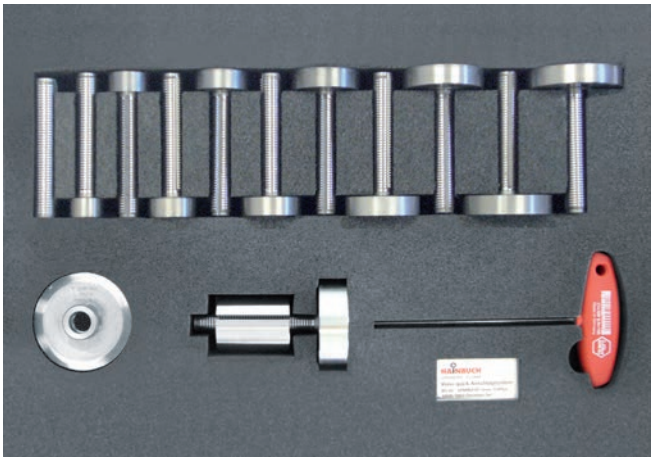

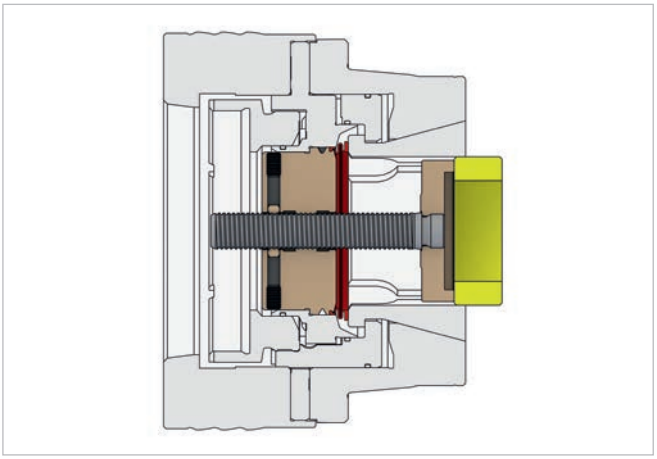

End-stop system vario quick

vario quick in detail

Designation	
1 Base plate [By replacing the base plate the end-stop screws and blank screws can also be used on other clamping devices.] 2 End-stop screws 3 Blank screw 4 Chip protection ring [not included in the scope of delivery]	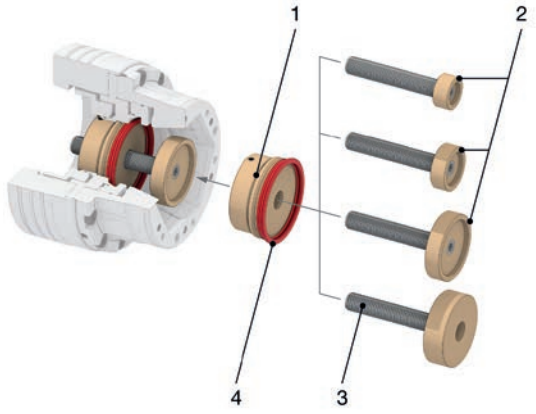

vario quick SETS. Order overview

Size	Suitable for	Variant	In addition to the basic equipment* set also contains	In stock	Material no.
32	SPANNTOP mini	Starter set	End-stop screw Ø 15,5 mm Blank screw Ø 30 mm Chip protection ring	✔	10000376
		Standard set	End-stop screw Ø 15,5 / 29 mm Blank screw Ø 30 mm Chip protection ring	✔	10000377
	SPANNTOP nova	Starter set	End-stop screw Ø 15,5 mm Blank screw Ø 30 mm	✔	10000310
		Standard set	End-stop screw Ø 15,5 / 29 mm Blank screw Ø 30 mm	✔	10000301
40	TOPlus mini TOPlus premium	Starter set	End-stop screw Ø 15,5 / 29 mm Blank screw Ø 40 mm Chip protection ring	✔	10000378
		Standard set	End-stop screw Ø 15,5 / 29 / 34 mm Blank screw Ø 40 mm Chip protection ring	✔	10000379
42	SPANNTOP mini	Starter set	End-stop screw Ø 15,5 / 29 mm Blank screw Ø 40 mm Chip protection ring	✔	10000380
		Standard set	End-stop screw Ø 15,5 / 29 / 34 mm Blank screw Ø 40 mm Chip protection ring	✔	10000381
	SPANNTOP nova	Starter set	End-stop screw Ø 15,5 / 29 mm Blank screw Ø 40 mm	✔	10000311
		Standard set	End-stop screw Ø 15,5 / 29 / 39 mm Blank screw Ø 40 mm	✔	10000302

End-stop system vario quick

Size	Suitable for	Variant	In addition to the basic equipment* set also contains	In stock	Material no.
52	TOPlus mini TOPlus premium SPANNTOP mini	Starter set	End-stop screw Ø 15,5 / 39 mm Blank screw Ø 50 mm Chip protection ring	✔	10000382
		Standard set	End-stop screw Ø 15,5 / 29 / 39 / 49 mm Blank screw Ø 50 mm Chip protection ring	✔	10000383
	TOPlus SPANNTOP nova	Starter set	End-stop screw Ø 15,5 / 39 mm Blank screw Ø 50 mm Chip protection ring	✔	10000312
	TOPlus SPANNTOP nova	Standard set	End-stop screw Ø 15,5 / 29 / 39 / 49 mm Blank screw Ø 50 mm Chip protection ring	✔	10000303
	TOROK CFK SE/RD TOROK steel SE/RD MANOK plus CFK SE/RD	Starter set	End-stop plate Ø 29 / 39 mm Blank screw Ø 50 mm	✔	10000391
		Standard set	End-stop screw Ø 15,5 / 29 / 39 / 49 mm Blank screw Ø 50 mm	✔	10000392
65	TOPlus mini TOPlus premium SPANNTOP mini	Starter set	End-stop screw Ø 15,5 / 39 mm Blank screw Ø 63 mm Chip protection ring	✔	10000384
		Standard set	End-stop screw Ø 15,5 / 29 / 39 / 49 / 59 mm Blank screw Ø 63 mm Chip protection ring	✔	10000385
	TOPlus SPANNTOP nova	Starter set	End-stop screw Ø 15,5 / 39 mm Blank screw Ø 63 mm Chip protection ring	✔	10000313
		Standard set	End-stop screw Ø 15,5 / 29 / 39 / 49 / 59 mm Blank screw Ø 63 mm Chip protection ring	✔	10000304
	TOROK steel / CFK SE/RD MANOK plus CFK SE/RD	Starter set	End-stop screw Ø 15,5 / 39 mm Blank screw Ø 63 mm Chip protection ring	✔	10000372
		Standard set	End-stop screw Ø 15,5 / 29 / 39 / 49 / 59 mm Blank screw Ø 63 mm Chip protection ring	✔	10000373
	MANOK plus steel SE/RD	Starter set	End-stop screw Ø 15,5 / 39 mm Blank screw Ø 63 mm Chip protection ring	✔	10000314
		Standard set	End-stop screw Ø 15,5 / 29 / 39 / 49 / 59 mm Blank screw Ø 63 mm Chip protection ring	✔	10000305

End-stop system vario quick

Size	Suitable for	Variant	In addition to the basic equipment* set also contains	In stock	Material no.
80	TOPlus mini TOPlus premium SPANNTOP mini	Starter set	End-stop screw Ø 15,5 / 39 / 69 mm Blank screw Ø 78 mm Chip protection ring	✔	10000386
		Standard set	End-stop screw Ø 15,5 / 29 / 39 / 49 / 59 / 69 / 79 mm Blank screw Ø 78 mm Chip protection ring	✔	10000387
	SPANNTOP nova	Starter set	End-stop screw Ø 15,5 / 39 / 69 mm Blank screw Ø 78 mm Chip protection ring	✔	10000316
		Standard set	End-stop screw Ø 15,5 / 29 / 39 / 49 / 59 / 69 / 79 mm Blank screw Ø 78 mm Chip protection ring	✔	10000307
	TOROK steel RD	Starter set	End-stop screw Ø 15,5 / 39 / 69 mm Blank screw Ø 78 mm Chip protection ring	✔	10019119
		Standard set	End-stop screw Ø 15,5 / 29 / 39 / 49 / 59 / 69 / 79 mm Blank screw Ø 78 mm Chip protection ring	✔	10019118
100	TOPlus mini TOPlus premium SPANNTOP mini	Starter set	End-stop screw Ø 39 / 79 mm Blank screw Ø 93 mm Chip protection ring	✔	10000388
		Standard set	End-stop screw Ø 39 / 49 / 59 / 69 / 79 / 89 mm Blank screw Ø 93 mm Chip protection ring	✔	10000389
	TOPlus combi pull-back SPANNTOP nova combi pull-back	Starter set	End-stop screw Ø 39 / 79 mm Blank screw Ø 93 mm Chip protection ring	✔	10019007
		Standard set	End-stop screw Ø 39 / 49 / 59 / 69 / 79 / 89 mm Blank screw Ø 93 mm Chip protection ring	✔	10019015
	TOPlus combi deadlength SPANNTOP nova combi deadlength	Starter set	End-stop screw Ø 39 / 79 mm Blank screw Ø 93 mm Chip protection ring	✔	10019016
		Standard set	End-stop screw Ø 39 / 49 / 59 / 69 / 79 / 89 mm Blank screw Ø 93 mm Chip protection ring	✔	10019017
	TOROK steel SE/RD	Starter set	End-stop screw Ø 39 / 79 mm Blank screw Ø 93 mm Chip protection ring	✔	10019031
		Standard set	End-stop screw Ø 39 / 49 / 59 / 69 / 79 / 89 mm Blank screw Ø 93 mm Chip protection ring	✔	10019032

*Basic equipment: Clamping sleeve, base plate and allen wrench.

Base plate for TOPlus mini and SPANNTOP mini [included in the set of the respective size]

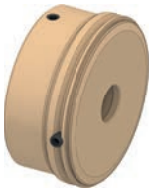

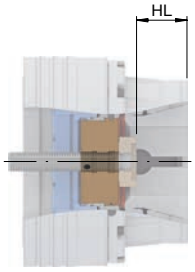

Size	Suitable for	Description	Maximum clamping depth for TOPlus mini pull-back [mm] HL	Maximum clamping depth for TOPlus mini deadlength [mm] HL	Maximum clamping depth for SPANNTOP mini pull-back [mm] HL	Maximum clamping depth for SPANNTOP mini deadlength [mm] HL	In stock	Material no.
32	SPANNTOP mini	prepared for chip protection ring			31	31,5	✔	10000356
40	TOPlus mini TOPlus premium	prepared for chip protection ring	33	32,6			✔	10000366
42	SPANNTOP mini	prepared for chip protection ring			28	31,2	✔	10000364
52	TOPlus mini TOPlus premium SPANNTOP mini	prepared for chip protection ring	32	31,8	32	31,8	✔	10000360
65	TOPlus mini TOPlus premium SPANNTOP mini	prepared for chip protection ring	40	40	40	40	✔	10000358
80	TOPlus mini TOPlus premium SPANNTOP mini	prepared for chip protection ring	40	41	40	41	✔	10000363
100	TOPlus mini TOPlus premium SPANNTOP mini	prepared for chip protection ring	58	60	58	60	✔	10000361

End-stop system vario quick

Base plate for TOPlus and SPANNTOP nova [included in the set of the respective size]





Size	Suitable for	Description	Max. clamping depth pull-back [mm] HL	Max. clamping depth deadlength [mm] HL	In stock	Material no.
32	SPANNTOP nova	not prepared for chip protection ring	38,5	38,5	✔	10000319
42	SPANNTOP nova	not prepared for chip protection ring	42,5	40,8	✔	10000320
52	TOPlus SPANNTOP nova	prepared for chip protection ring	42,5	40,8	✔	10000321
65	TOPlus SPANNTOP nova	prepared for chip protection ring	49,5	51	✔	10000322
80	SPANNTOP nova	prepared for chip protection ring	49,5	51	✔	10000326
100	TOPlus combi pull-back SPANNTOP nova combi pull-back	prepared for chip protection ring	59	71,5	✔	10017273
	TOPlus combi deadlength SPANNTOP nova combi deadlength				✔	10017274

Base plate for TOROK - end-stop type 1 [included in the set of the respective size]



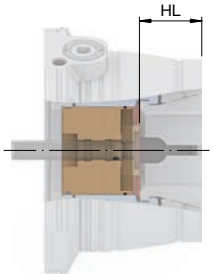

Size	End-stop type	Description	Maximal clamping depth [mm] HL	In stock	Material no.
52	T1	not prepared for chip protection ring	49,5	✔	10000370
65	T1	prepared for chip protection ring	49,5	✔	10000374
80	T1	prepared for chip protection ring	53,5	✔	10019120
100	T1	prepared for chip protection ring	51,5	✔	10018994

Base plate for TOROK – end-stop type 2 for greater clamping depth [not included in the scope of delivery of the set]



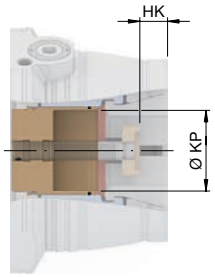

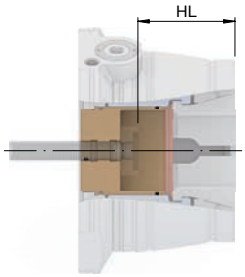

Size	End-stop type	Description	Minimal clamping depth [mm] HK	Maximal clamping depth [mm] HL	Workpiece Ø [mm] KP	In stock	Material no.
52	T2	not prepared for chip protection ring	23	76	50	✔	10000390
65	T2	not prepared for chip protection ring	22	77	63	✔	10000375
80	T2	prepared for chip protection ring	30,5	81	78	✔	10019127
100	T2	prepared for chip protection ring	31	86		✔	10018995

Base plate for MANOK plus – end-stop type 1 [included in the set of the respective size]



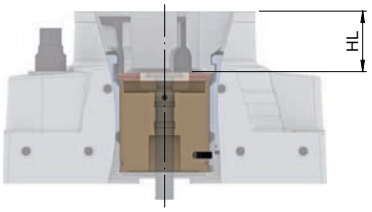

Size	Suitable for	Description	End-stop type	Maximal clamping depth [mm] HL	In stock	Material no.
52	CFK model	not prepared for chip protection ring	T1	49,5	✔	10000370
65	Steel model	prepared for chip protection ring	T1	48	✔	10000324
	CFK model			49	✔	10000374

End-stop system vario quick

Base plate for MANOK plus – end-stop type 2 for greater clamping depth [not included in the scope of delivery of the set]

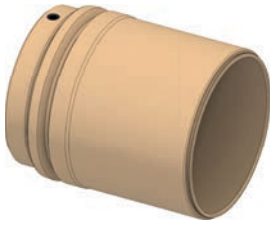

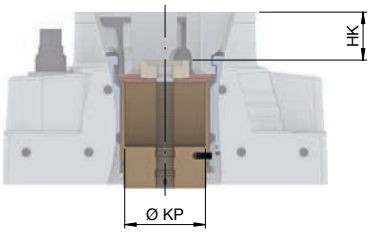

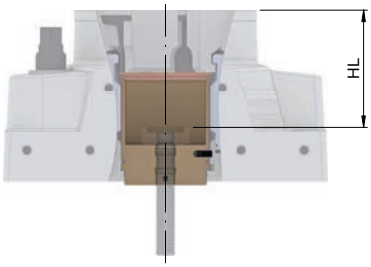

Size	Suitable for	Description	End-stop type	Minimal clamping depth [mm] HK	Maximal clamping depth [mm] HL	Workpiece Ø [mm] KP	In stock	Material no.
52	CFK model	not prepared for chip protection ring	T2	23	76	50	✔	10000390
65	Steel model	not prepared for chip protection ring	T2	38	93	63	✔	10019030
	CFK model			23	77		✔	10000375

Depth end-stop, short [not included in the scope of delivery of the set]

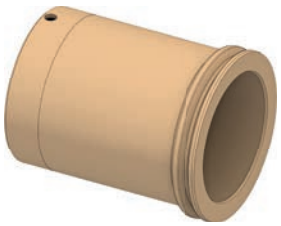

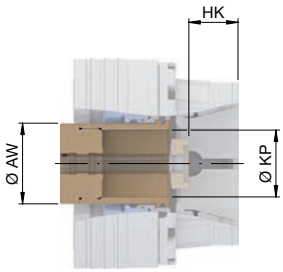

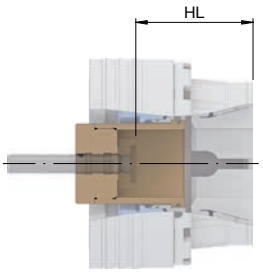

Size	Suitable for	Minimal clamping depth [mm] HK	Maximal clamping depth [mm] HL	Workpiece Ø [mm] KP	Outer Ø [mm] AW	In stock	Material no.
32	SPANNTOP nova	37,5	88	23,5	32,6	✔	10000490
	SPANNTOP mini	30	82			✔	10000502
40	TOPlus mini TOPlus premium	32	86	33,5	42	✔	10000504
42	SPANNTOP nova	41,5	92	33,5	42	✔	10000492
	SPANNTOP mini	27	81			✔	10000506

End-stop system vario quick

Size	Suitable for	Minimal clamping depth [mm] HK	Maximal clamping depth [mm] HL	Workpiece Ø [mm] KP	Outer Ø [mm] AW	In stock	Material no.
52	TOPlus SPANNTOP nova	41,5	94	44	51,5	✔	10000494
	TOPlus mini TOPlus premium SPANNTOP mini	31	85			✔	10000508
65	TOPlus SPANNTOP nova	48,5	102	52	64,5	✔	10000496
	TOPlus mini TOPlus premium SPANNTOP mini	39	93		64	✔	10000510
80	TOPlus mini TOPlus premium SPANNTOP mini	39	93	65	78	✔	10000512
	SPANNTOP nova	48,5	102		78,5	✔	10000498
100	TOPlus SPANNTOP nova	57	110,5	89	100	✔	10000500
	TOPlus mini TOPlus premium SPANNTOP mini		111			✔	10000514

Delivery without end-stop / blank screw.

End-stop system vario quick

Depth end-stop, long [not included in the scope of delivery of the set]

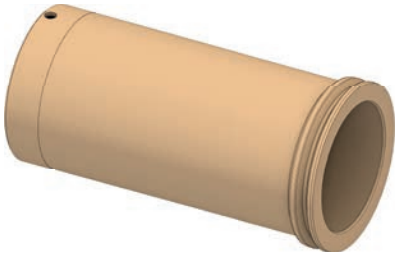

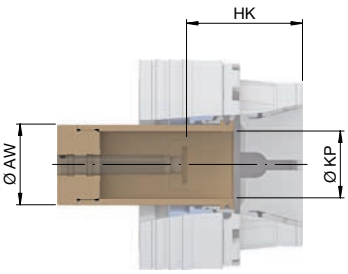

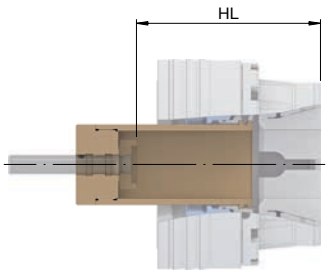

Size	Suitable for	Minimal clamping depth [mm] HK	Maximal clamping depth [mm] HL	Workpiece Ø [mm] KP	Outer Ø [mm] AW	In stock	Material no.
32	SPANNTOP nova	87	130	23,5	32,6	✔	10000491
	SPANNTOP mini	78				✔	10000503
40	TOPlus mini TOPlus premium	81	135	33,5	42	✔	10000505
42	SPANNTOP nova	91	141	33,5	42	✔	10000493
	SPANNTOP mini	80	134			✔	10000507
52	TOPlus SPANNTOP nova	93	145,5	44	51,5	✔	10000495
	TOPlus mini TOPlus premium SPANNTOP mini	84	138			✔	10000509
65	TOPlus SPANNTOP nova	101	154,5	52	64,5	✔	10000497
	TOPlus mini TOPlus premium SPANNTOP mini	92	146		64	✔	10000511
80	TOPlus mini TOPlus premium SPANNTOP mini	92	146	65	78	✔	10000513
	SPANNTOP nova	101	154,5		78,5	✔	10000499
100	TOPlus SPANNTOP nova	108,5	162	89	100	✔	10000501
	TOPlus mini TOPlus premium SPANNTOP mini	110	164			✔	10000515

Delivery without end-stop / blank screw.

Product	Figure	Description	In stock	Material no.
Assembly aid [for depth end-stops]		With trapezoidal thread	✔	10000250

Supplemental end-stop/blank screws – suitable for all sets and depth end-stops

Product	Figure	End-stop outer Ø [mm] AZ	In stock	Material no.
End-stop screw		15,5	✔	10000352
		19,0	✔	10000336
		24,0	✔	10000337
		29,0	✔	10000338
		34,0	✔	10000339
		39,0	✔	10000340
		44,0	✔	10000341
		49,0	✔	10000342
		54,0	✔	10000343
		59,0	✔	10000344
		64,0	✔	10000345
		69,0	✔	10000346
		74,0	✔	10000347
		79,0	✔	10000348
		84,0	✔	10000349
		89,0	✔	10000350
		94,0	✔	10000351
Blank screw	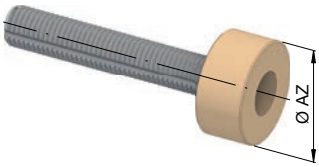	30,0	✔	10000329
		40,0	✔	10000330
		50,0	✔	10000331
		63,0	✔	10000332
		78,0	✔	10000333
		93,0	✔	10000334

End-stop system vario flex



End-stop system vario flex

With the vario flex gas pressure workpiece ejector the machined workpiece is automatically ejected out of the clamping device. This automation increases your process reliability and reduces cycle times.

Moreover, the vario flex workpiece ejector can also be used as base end-stop for the flushing or air sensing system connection. Therefore the gas pressure spring is removed and replaced with a media connection.

Key advantages

- For automatic ejection of the workpiece out of the chuck
- Workpiece ejector or base end-stop for flushing or air sensing system

Your benefits

- Process reliability through automatic workpiece ejection
- Productivity increase through reduced cycle time
- Flexibility through different implementation possibilities

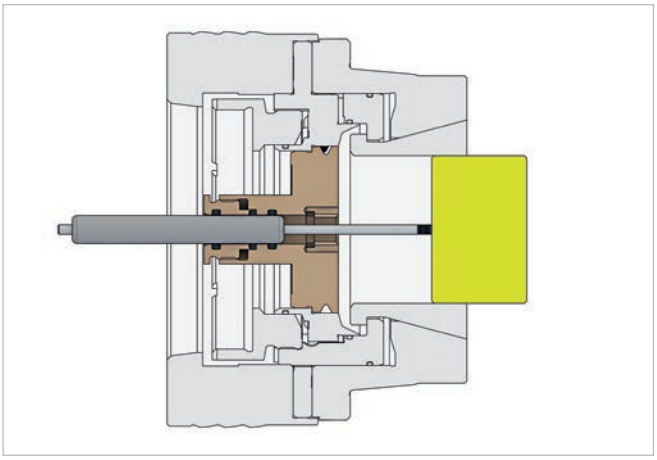

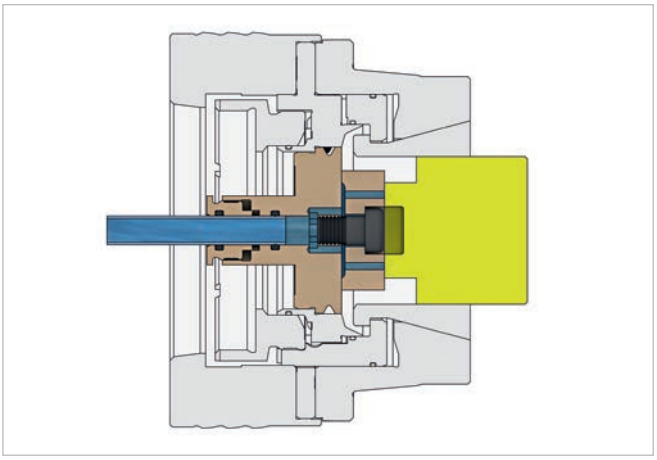

vario flex. Technical data

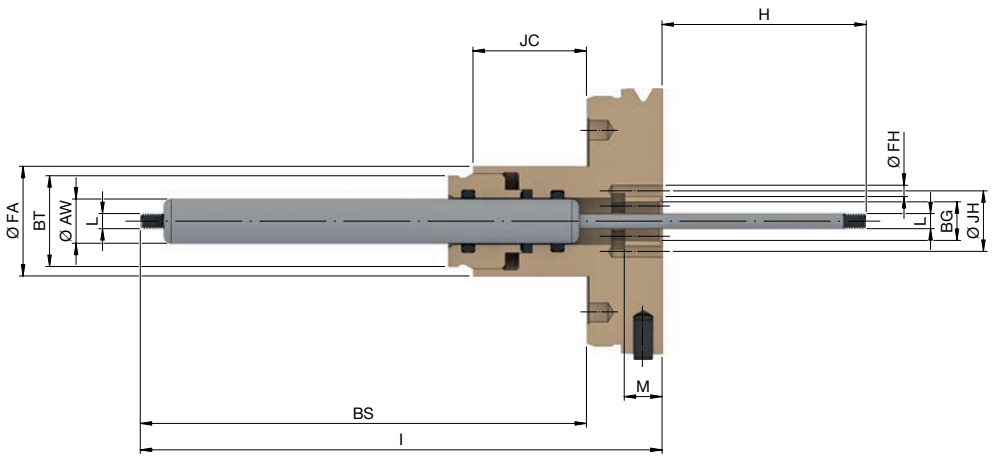

Suitable for		TOPlus mini TOPlus premium SPANNTOP mini						
Size		**32**	**40**	**42**	**52**	**65**	**80**	**100**
Length [mm]	H	45	48,1	42,6	46	54		72
Piston force [N]		40						
Thread size [M]	L	4						
End-stop thread size [M]	BG	10				12		
Depth of thread [mm]	M	10						
Total length [mm]	I	127	123,9	129,4	126	138		160
Length 2 [mm]	BS	113,5	111	116	106	118		138
Outer Ø [mm]	AW	12						
Length 3 [mm]	JC	30						
Outer Ø 2 [mm]	FA	29						
Bore-Ø	FH	3						
Bolt hole circle [mm]	JH	14				16		
Wrench size [SW]	BT	24						
In stock		✔	✔	✔	✔	✔	✔	✔
Material no.		10001374	10001375	10001376	10001377	10001378	10001379	10001380

Suitable for		TOPlus SPANNTOP nova					
Size		**32**	**42**	**52**	**65**	**80**	**100**
Length [mm]	H	53,5	56		65		85
Piston force [N]		40					
Thread size [M]	L	4					
End-stop thread size [M]	BG	10			12		
Depth of thread [mm]	M	10					
Total length [mm]	I	118,5	116		127		147
Length 2 [mm]	BS	101,5	99		110		127
Outer Ø [mm]	AW	12					
Length 3 [mm]	JC	30					
Outer Ø 2 [mm]	FA	29					
Bore-Ø	FH	3					
Bolt hole circle [mm]	JH	14			16		
Wrench size [SW]	BT	24					
In stock		✔	✔	✔	✔	✔	✔
Material no.		10001368	10001369	10001370	10001371	10001372	10001373

End-stop blanks



End-stop blanks

With the workpiece end-stop blanks you have pre-fabricated workpiece end-stops »in the drawer« that you can adapt individually to your workpieces and clamping situations. The hardness of the blanks is 42 HRC – which allows good machining.

The workpiece end-stop blanks are mounted on the base plate included in the scope of delivery.

Key advantages

- Prefabricated workpiece end-stops that can be individually adapted in diameter and length
- Easy to change through assembly on the base end-stop plate

Your benefits

- Time saving and ready to use immediately
- Cost saving because work preparation is not required

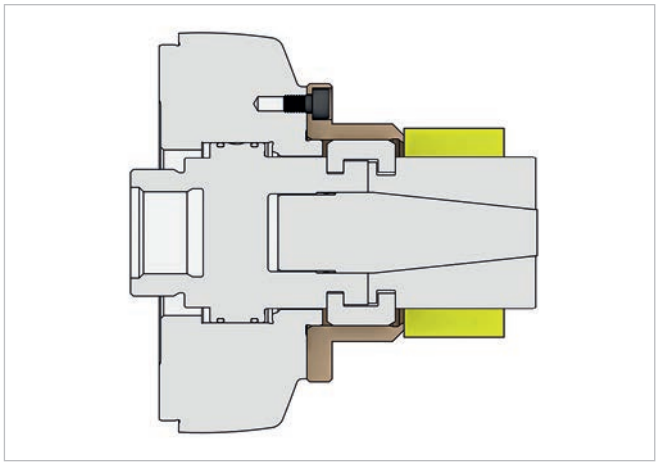

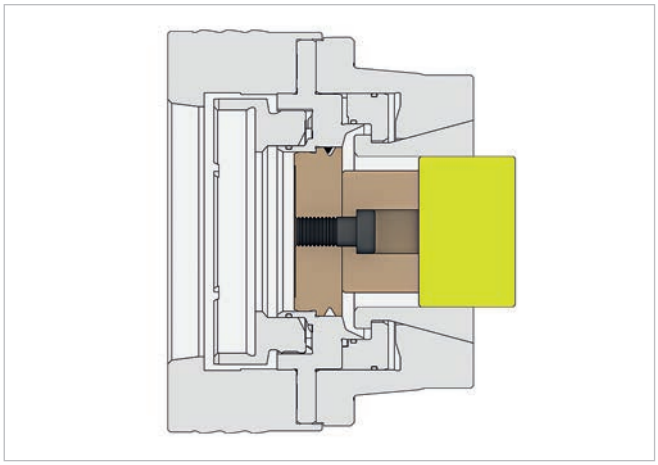

TOPlus / SPANNTOP chuck. Workpiece end-stops for machining to size

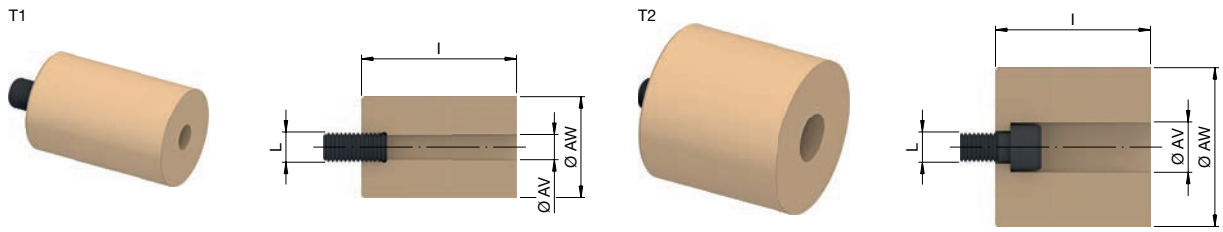

Size	End-stop type	Suitable for	Outer Ø [mm] AW	Inner Ø [mm] AV	Total length [mm] l	Thread size [M] L	In stock	Material no.
32	T1	SPANNTOP nova SPANNTOP mini	30	8	50,5	10	✔	10000539
40/42/52	T1	TOPlus mini TOPlus premium TOPlus SPANNTOP mini SPANNTOP nova	40	8	54,5	10	✔	10000540
52	T2	TOPlus mini TOPlus premium TOPlus SPANNTOP mini SPANNTOP nova	50	18	54,5	10	✔	10000535
65/80	T1	TOPlus mini TOPlus premium TOPlus SPANNTOP mini SPANNTOP nova	40	10	61,5	12	✔	10000541
65	T2	TOPlus mini TOPlus premium TOPlus SPANNTOP mini SPANNTOP nova	63	20	61,5	12	✔	10000536
80	T2	TOPlus mini TOPlus premium SPANNTOP mini SPANNTOP nova	78	20	61,5	12	✔	10000537
100	T1	TOPlus mini TOPlus premium TOPlus SPANNTOP mini SPANNTOP nova	42	10	71	12	✔	10000542
	T2		98	32			✔	10000538

End-stop blanks

MANDO / MANDO Adapt T211 [mandrel and mandrel adaptation].

End-stops for machining to size for SB and SAD segmented clamping bushing

Size MANDO / MANDO Adapt	Figure	Outer Ø [mm] DR	Total length [mm] l	Inner Ø [mm] AV	In stock	Material no.
0	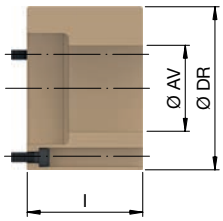	65	30	24,5	✔	10006455
				32,5	✔	10006457
				20,5	✔	10006454
				28,5	✔	10006456
1		69	40	26,5	✔	10006459
				32,5	✔	10006460
				38,5	✔	10006461
				39,5	✔	10006462
		65		24,5	✔	10006458
2		93	55	36,5	✔	10006464
				42,5	✔	10006465
				48,5	✔	10006466
				54,5	✔	10006468
				50,5	✔	10006467
3		106	63	90,6	✔	10006477
		96		68,6	✔	10006474
		116		100,6	✔	10006469
		96		50,6	✔	10006471
				56,6	✔	10006472
				62,6	✔	10006473
				70,6	✔	10006475
				80,6	✔	10006476
4		120	75	92,8	✔	10006485
				70,8	✔	10006482
				76,8	✔	10006483
				84,8	✔	10006484
				100,8	✔	10006478
		130		106,8	✔	10006479
				113,8	✔	10006480
				120,8	✔	10006481
5		150	104	131	✔	10006489
				101	✔	10006486
				111	✔	10006487
				121	✔	10006488
6		180	112	161	✔	10006493
				151	✔	10006492
				141	✔	10006491
				131	✔	10006490
7		220	125,5	191,8	✔	10006497
				171,8	✔	10006495
				201,8	✔	10006498
				181,8	✔	10006496
				161,8	✔	10006494

MANDO / MANDO Adapt T212 / T812 [mandrel and mandrel adaptation].

End-stops for machining to size for SB segmented clamping bushings [When using SAD segmented clamping bushings please see the following table.]

Size	Figure	Outer Ø [mm] DR	Total length [mm] l	Inner Ø [mm] AV	In stock	Material no.
XXS	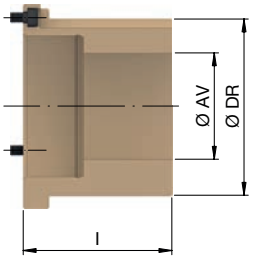	41	45,5	8,5	✔	10006540
				9,5	✔	10006541
				10,5	✔	10006538
				13,5	✔	10006539
XS		42	45,5	13,5	✔	10006535
				18,5	✔	10006536
				19,5	✔	10006537
S		45	47,5	16,5	✔	10006533
				21,5	✔	10006534
0		54	58,5	20,5	✔	10006499
				24,5	✔	10006500
				28,5	✔	10006501
1		62	64,5	26,5	✔	10006502
				32,5	✔	10006503
				38,5	✔	10006504
2		76	80,5	36,5	✔	10006505
				42,5	✔	10006506
				48,5	✔	10006507
				54,5	✔	10006508
3		105	87,5	50,6	✔	10006509
				56,6	✔	10006510
				62,6	✔	10006511
				70,6	✔	10006512
				80,6	✔	10006513
4		124	97,5	70,8	✔	10006515
				76,8	✔	10006516
				84,8	✔	10006517
				92,8	✔	10006518
				100,8	✔	10006514
5		160	112,5	100,8	-	10006519
				106,8	-	10006520
				114,8	-	10006521
				122,8	-	10006522
				130,8	-	10006523
6		190	122	130,8	-	10006524
				136,8	-	10006525
				144,8	-	10006526
				152,8	-	10006527
				160,8	-	10006528
7		212	115	161,8	-	10006529
				171,8	-	10006530
				181,8	-	10006531
				192	-	10006532

End-stop blanks

MANDO / MANDO Adapt T212 / T812 [mandrel and mandrel adaptation].

End-stops for machining to size with use of SAD segmented clamping bushings

Size	Figure	Outer Ø [mm] DR	Total length [mm] l	Inner Ø [mm] AV	In stock	Material no.
XS	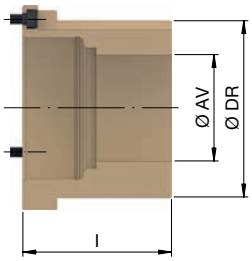	42	45,5	13,5	✔	10006663
				18,5	✔	10006664
S		45	47,5	16,5	✔	10006661
				21,5	✔	10006662
0		54	58,5	20,5	✔	10006627
				24,5	✔	10006628
				28,5	✔	10006629
1		62	64,5	26,5	✔	10006630
				32,5	✔	10006631
				38,5	✔	10006632
2		76	80,5	36,5	✔	10006633
				42,5	✔	10006634
				48,5	✔	10006635
				54,5	✔	10006636
3		105	87,5	50,6	✔	10006637
				56,6	✔	10006638
				62,6	✔	10006639
				70,6	✔	10006640
				80,6	✔	10006641
4		124	97,5	70,8	✔	10006643
				76,8	✔	10006644
				84,8	✔	10006645
				92,8	✔	10006646
				100,8	✔	10006642
5		160	112,5	100,8	✔	10006647
				106,8	✔	10006648
				114,8	✔	10006649
				122,8	✔	10006650
				130,8	✔	10006651
6		190	122	130,8	✔	10006652
				136,8	✔	10006653
				144,8	✔	10006654
				152,8	✔	10006655
				160,8	✔	10006656
7		212	115	161,8	✔	10006657
				171,8	✔	10006658
				181,8	✔	10006659
				192	✔	10006660

MAXXOS T211 mandrel.

End-stops for machining to size for SB and SAD segmented clamping bushing

Size MAXXOS	Figure	Outer Ø [mm] DR	Total length [mm] l	Inner Ø [mm] AV	In stock	Material no.
A	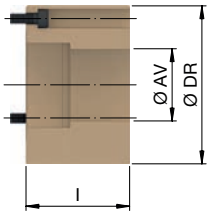	65	30	18,5	✔	10006453
A B				20,5	✔	10006454
				24,5	✔	10006455
				28,5	✔	10006456
				32,5	✔	10006457
C			40	24,5	✔	10006458
		69		26,5	✔	10006459
				32,5	✔	10006460
				38,5	✔	10006461
				39,5	✔	10006462
D		93	55	32,5	✔	10006463
				36,5	✔	10006464
				42,5	✔	10006465
				48,5	✔	10006466
				50,5	✔	10006467
				54,5	✔	10006468
E		96	63	39,6	✔	10006470
E F				50,6	✔	10006471
				56,6	✔	10006472
				62,6	✔	10006473
				68,6	✔	10006474
				70,6	✔	10006475
				80,6	✔	10006476
		106		90,6	✔	10006477
		116		100,6	✔	10006469

MANOK manual stationary chuck. Workpiece end-stop

Product	Figure	Size	In stock	Material no.
Workpiece end-stop		65	✔	10001988

Front end-stops



Front end-stop blanks

With the front end-stop blanks you have prefabricated workpiece end-stops on hand that you can adapt individually to your workpieces and clamping situations. The hardness of the blanks is 42 HRC – which allows good machining.

The front end-stop blanks are mounted on the face of the chuck. For the SPANNTOP mini chucks, they are mounted on the adaptation ring.

Key advantages

- Prefabricated workpiece end-stops that can be individually adapted in diameter and length
- Easy to change
- Higher force transmission compared to inside end-stop

Your benefits

- Time saving and ready to use immediately
- Cost saving because work preparation is not required
- Higher machining parameters are possible

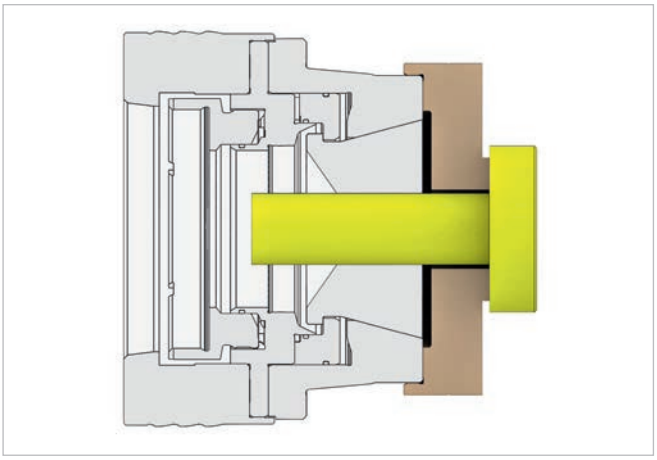

Front end-stop for machining to size

Size	Figure	Suitable for	End-stop height [mm] GZ	Effective length [mm] HJ	Outer Ø [mm] DR	Bore-Ø FH	In stock	Material no.
26	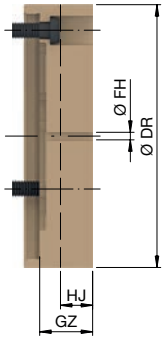	TOPlus mini pull-back TOPlus premium	27	17	72	4	-	10000525
32		SPANNTOP mini pull-back	30	17	78	4	-	10000524
		SPANNTOP combi pull-back / modular HYDROK RD	29,5		85		✔	10000516
40		TOPlus mini pull-back TOPlus premium	29	17	101	4	✔	10000526
42/52		SPANNTOP combi pull-back / modular SPANNTOP mini pull-back TOROK CFK RD TOROK RD MANOK plus CFK RD HYDROK RD	27,5	17	135	4	✔	10000517
52		TOPlus mini pull-back TOPlus premium	28	17	129	4	✔	10000527
		TOPlus combi pull-back / modular TOROK CFK SE TOROK SE MANOK plus CFK SE HYDROK SE	26		135		✔	10000521
65		TOPlus mini pull-back TOPlus premium	28	17	139	4	✔	10000528
		TOPlus combi pull-back / modular TOROK CFK SE TOROK SE MANOK plus CFK SE MANOK plus SE HYDROK SE	24,5		155		✔	10000522

Front end-stops

Size	Figure	Suitable for	End-stop height [mm] GZ	Effective length [mm] HJ	Outer Ø [mm] DR	Bore-Ø FH	In stock	Material no.
65	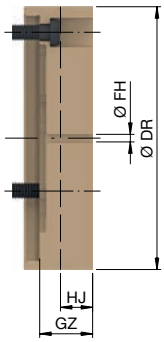	SPANNTOP combi pull-back / modular SPANNTOP mini pull-back TOROK CFK RD TOROK RD MANOK plus CFK RD MANOK plus RD HYDROK RD	27	17	155	4	✔	10000518
80		TOPlus mini pull-back TOPlus premium	28	17	160	4	✔	10017159
		SPANNTOP combi pull-back / modular SPANNTOP mini pull-back TOROK RD HYDROK RD	27		170		✔	10000519
100		TOPlus mini pull-back TOPlus premium	30,5	17	193	4	✔	10000529
		TOPlus combi pull-back / modular TOROK SE HYDROK SE	26		225		✔	10000523
		SPANNTOP combi pull-back / modular SPANNTOP mini pull-back TOROK RD HYDROK RD	30,5				✔	10000520

Please note: The front end-stops only fit for clamping heads size 32 – 80 BZIG, or size 100 BZG [clamping of finished material].



Chip protection rings

Chip protection rings extensively protect the chuck mechanism from contaminants and thus guarantee high process reliability.

Two variants are available that are suited for the different chuck models: One variant for use of the existing unrestricted chuck capacity, the other variant for use when the workpiece is clamped position-oriented on a base end-stop.

Key advantages

- Protects the chuck mechanism from contamination
- Fast and easy assembly
- Variant with full chuck capacity or base end-stop available
- Dimensionally stable seal ring produced through machining

Your benefits

- Less machine downtime
- Increased process reliability
- Longer service life of the chuck

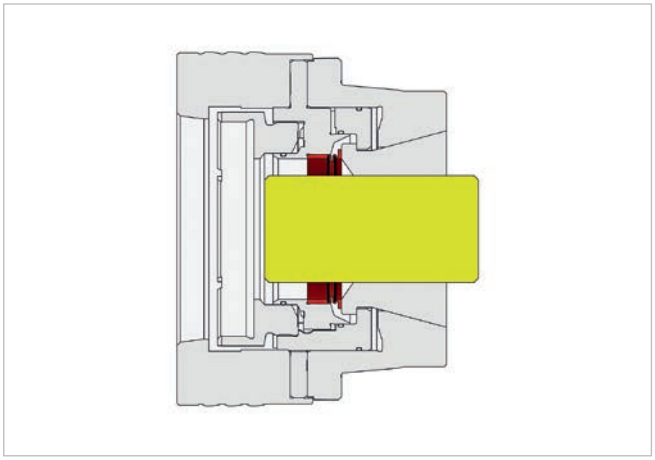

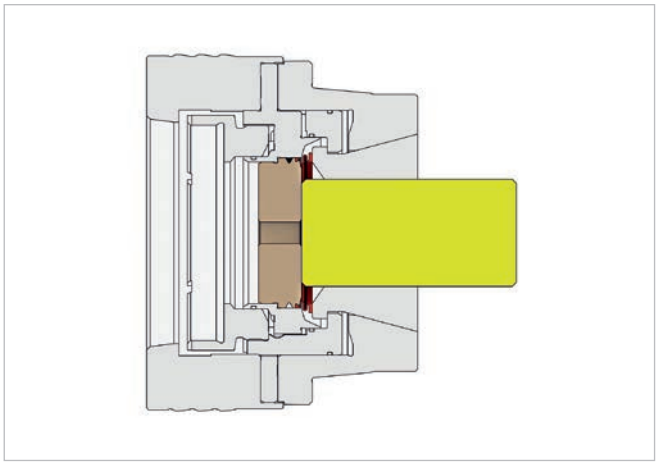

Chip protection rings

Chuck TOPlus / TOPlus mini / SPANNTOP nova / SPANNTOP mini.

Chip protection ring for sealing, with through-bore

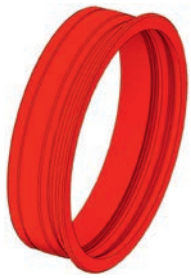

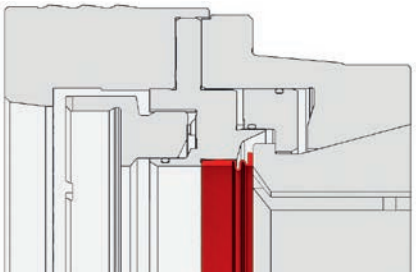

Size	Suitable for	Ø Capacity [mm]	In stock	Order no.
26	TOPlus mini TOPlus premium	26,5	✔	10001338
32	SPANNTOP nova	33	✔	10001346
	SPANNTOP mini		✔	10001339
40	TOPlus mini TOPlus premium	41	✔	10001340
42	SPANNTOP nova	43	✔	10001347
	SPANNTOP mini		✔	10001341
52	TOPlus SPANNTOP nova	53	✔	10001348
	TOPlus mini TOPlus premium SPANNTOP mini		✔	10001342
65	TOPlus SPANNTOP nova	66	✔	10001349
	TOPlus mini TOPlus premium SPANNTOP mini		✔	10001343
80	TOPlus mini TOPlus premium SPANNTOP mini	81	✔	10001344
	SPANNTOP nova		✔	10001350
100	TOPlus combi pull-back SPANNTOP nova combi pull-back	101	✔	10001351
	TOPlus combi deadlength SPANNTOP nova combi deadlength		✔	10001352
	TOPlus mini TOPlus premium SPANNTOP mini		✔	10001345

Chuck TOPlus / TOPlus mini / SPANNTOP nova / SPANNTOP mini.

Chip protection ring for sealing, with base end-stop

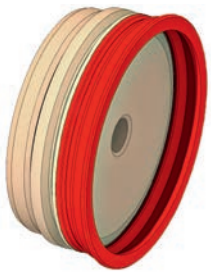

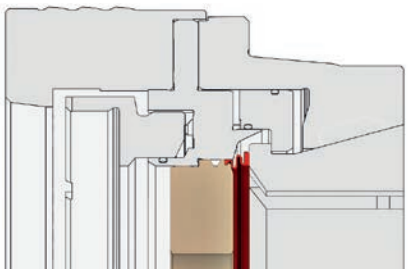

Size	Suitable for	Workpiece Ø [mm]	In stock	Order no.
26	TOPlus mini TOPlus premium	26,5	✔	10001353
32	SPANNTOP nova	31	✔	10001361
	SPANNTOP mini	33	✔	10001354
40	TOPlus mini TOPlus premium	41	✔	10001355
42	SPANNTOP nova	40	✔	10001362
	SPANNTOP mini	43	✔	10001356
52	TOPlus SPANNTOP nova	50	✔	10001363
	TOPlus mini TOPlus premium SPANNTOP mini	53	✔	10001357
65	TOPlus SPANNTOP nova	63	✔	10001364
	TOPlus mini TOPlus premium SPANNTOP mini	66	✔	10001358
80	TOPlus mini TOPlus premium SPANNTOP mini	81	✔	10001359
	SPANNTOP nova	79	✔	10001365
100	TOPlus combi pull-back SPANNTOP nova combi pull-back	101	✔	10001366
	TOPlus combi deadlength SPANNTOP nova combi deadlength		✔	10001367
	TOPlus mini TOPlus premium SPANNTOP mini		✔	10001360

Adaptation ring HAINBUCH SYSTEM



Adaptation ring for HAINBUCH SYSTEM

Mounting the adaptation ring on the SPANNTOP mini chuck, in spite of the extremely slender chuck contour, makes it possible to use modular adaptations, such as the MANDO Adapt, the jaw module or the magnet module.

The adaptation ring is bolted onto the face of the chuck with 3 screws. Due to the fit, the adaptation ring is self-centering in all pullback chucks, therefore eliminating the need for alignment. For all deadlength chucks the adaptation ring may be aligned manually.

Key advantages

- Enables use of the HAINBUCH SYSTEM
- For SPANNTOP mini chuck
- Self-aligning for SPANNTOP mini pull-back

Your benefits

- Application areas of the chuck are extended through the adaptations = fast changing from O.D. clamping to I.D. clamping, jaw clamping or clamping of magnetic parts



Adaptation ring HAINBUCH SYSTEM

SPANNTOP mini chuck.
Adaptation ring for assembly of MANDO Adapt, jaw module, face driver, and morse taper

Size	Figure	Variant	In stock	Material no.
42		Pull-back	✔	10000984
		Deadlength	✔	10000989
52		Pull-back	✔	10000985
		Deadlength	✔	10000990
65		Pull-back	✔	10000986
		Deadlength	✔	10000991
80		Pull-back	✔	10000987
		Deadlength	✔	10000992
100		Pull-back	✔	10000988

Insert bushings jaw chuck

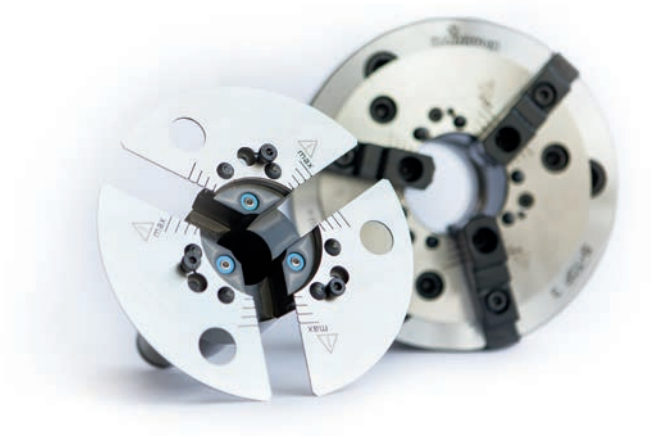

Bushing inserts

With the insert bushings the B-Top and B-Top3 jaw chucks can be expanded with many additional useful functions. Whether automatic ejection of the workpiece after a machining process or use of an adjustable workpiece end-stop. To do this the insert bushing with through-bore mounted in the jaw chuck will be replaced with a different insert bushing.

Key advantages

- Additional functions for jaw chucks, such as ejecting the workpiece or the adjustable workpiece depth end-stop
- Easy to change

Your benefits

- Cost saving through fast response to different requirements
- Time saving and ready to use immediately

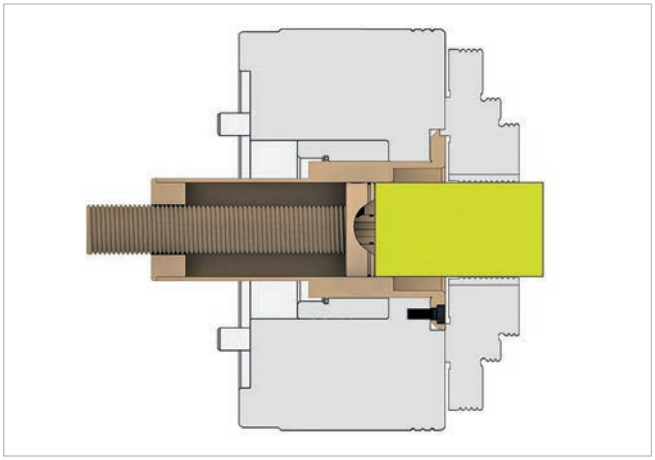

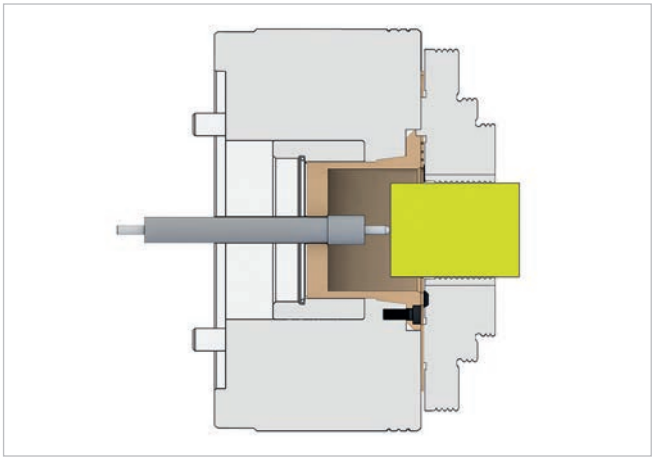

B-Top jaw chuck. Bushing inserts

Product	Figure	Size	In stock	Material no.
Bushing insert with through-bore	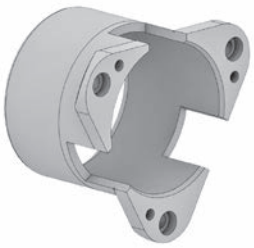	165	✔	10002040
		215	✔	10002041
		260	✔	10002042
		315	✔	10002043
Bushing insert, closed	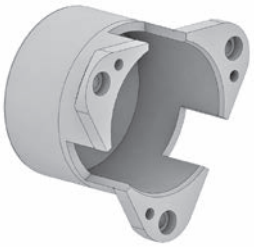	165	✔	10002044
		215	✔	10002045
		260	✔	10002046
		315	✔	10002047
Bushing insert with ejector	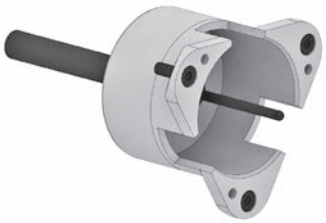	165	✔	10002064
		215	✔	10002065
		260	✔	10002066
		315	✔	10002067
Bushing insert with spray nozzles	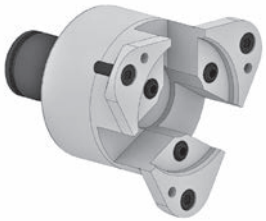	165	✔	10002052
		215	✔	10002053
		260	✔	10002054
		315	✔	10002055
Bushing insert with adjustable end-stop	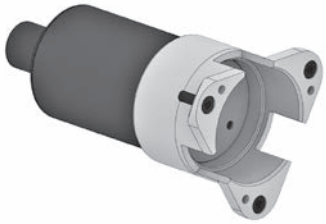	165	✔	10002058
		215	✔	10002059
		260	✔	10002060
		315	✔	10002061

Insert bushings jaw chuck

B-Top3 jaw chuck. Bushing inserts

Product	Figure	Jaw width [mm]	In stock	Material no.
Bushing insert with through-bore		22	✔	10002049
		40	✔	10002050
Bushing insert, closed		22	✔	10002048
		40	✔	10002051
Bushing insert with ejector		22	✔	10002068
		40	✔	10002069
Bushing insert with spray nozzles		22	✔	10002056
		40	✔	10002057
Bushing insert with adjustable end-stop	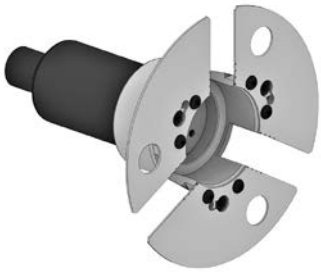	22	✔	10002062
		40	✔	10002063

Insert bushings include mounted guard plates.



Clamping head adapter

Large workpieces – large chucks – large clamping heads. So far so good, but sometimes you also have to machine smaller workpieces? Instead of buying large clamping heads with a small diameter, there is now a better alternative: the clamping head adapter.

For example, it can basically turn a size 100 chuck into a size 65 chuck and you can then change your normal size 65 heads using this clamping head adapter. Your advantages are in-stock availability and a lower price for the smaller clamping heads. You also save the costs of purchasing new large clamping heads if you are already using smaller clamping heads.

Changing the clamping head adapter is fast and easy with the suitable changer interface.

Key advantages

- Smaller clamping heads can be used in larger chucks [size 100, 125 and 160]
- Use existing clamping heads [size 65 and 100]
- Fast and easy change-over

Your benefits

- Reduced costs due to use of smaller clamping heads
- Smaller clamping heads can be kept in stock for faster availability
- Covers a larger range of clamping diameters
- Productivity boost and saving of time due to faster change-over between large and small clamping diameters
- Flexible production since single clamping heads can be used on multiple machines



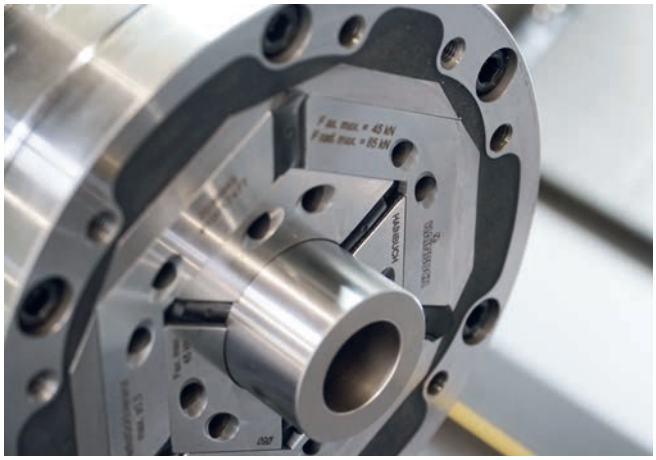

Clamping head adapter

Clamping head adapter SE in detail

Designation	
1 Chuck 2 Clamping head adapter 3 Standard clamping head	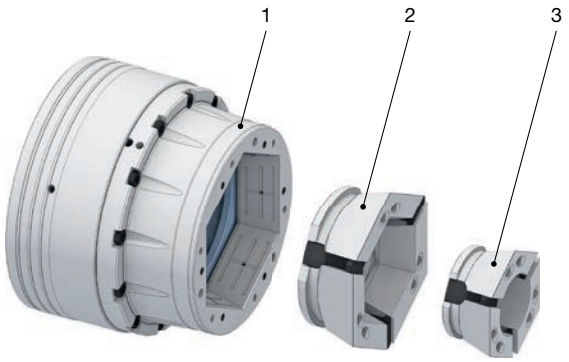

Clamping head adapter RD in detail

Designation	
1 Chuck 2 Clamping head adapter 3 Standard clamping head	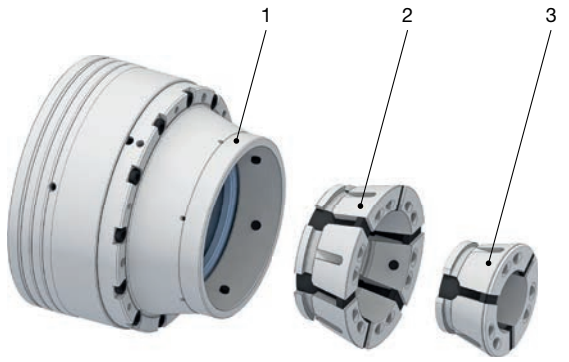

Clamping head adapter TOPlus. Technical data



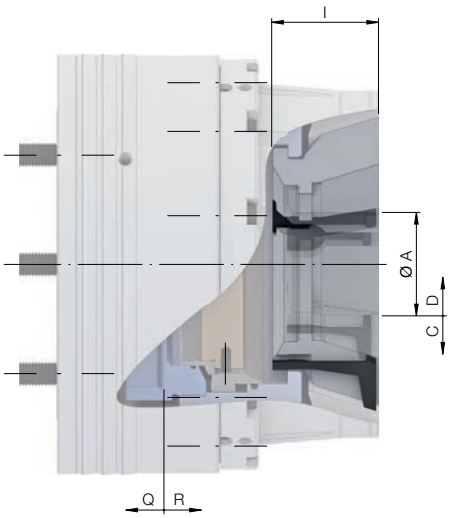

Size		100	160
Adaptation size		65	
Run-out ≤ [mm]		0,030	
Max. radial clamping force on the clamping head [kN]		85	
Max. axial drawtube force [pull / push] [kN]		45	
RPM n max. [1/min.]		5000	3200
Clamping range [mm]	A	3 – 65	
Reserve stroke in Ø [mm]	D	1	
Release stroke in Ø [mm]	C	0,6	
Range / recommended workpiece tolerance [mm]		± 0,5	
Reserve stroke axial [mm]	Q	2	
Release stroke axial [mm]	R	2,5	
Total length [mm]	l	56,5	57,5
Weight [kg]		2,7	6,7
In stock		✔	✔
Material no.		10017477	10017478

Important: Never exceed the usable clamping reserve in the diameter!

The run-out refers to the workpiece in clamped state, including the clamping head.

Clamping head adapter

Clamping head adapter SPANNTOP. Technical data



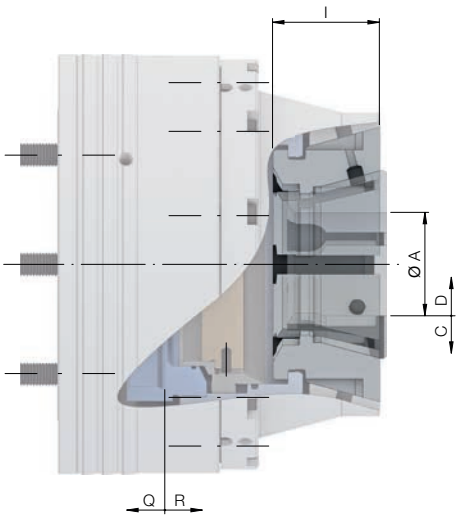

Size		100	125	160
Adaptation size		**65**		**100**
Run-out ≤ [mm]		0,030	0,035	0,040
Max. radial clamping force on the clamping head [kN]		90		127
Max. axial drawtube force [pull / push] [kN]		45		65
RPM n max. [1/min.]		3900	3200	
Clamping range [mm]	A	3 – 65		15 – 100
Reserve stroke in Ø [mm]	D	1		
Release stroke in Ø [mm]	C	0,6		1,6
Range / recommended workpiece tolerance [mm]		± 0,5		± 0,7
Reserve stroke axial [mm]	Q	2		
Release stroke axial [mm]	R	2,5		4
Total length [mm]	l	56,5	59,5	59
Weight [kg]		2,5	5,7	7,5
In stock		✔	✔	✔
Material no.		10018455	10017475	10017476

Important: Never exceed the usable clamping reserve in the diameter!

The run-out refers to the workpiece in clamped state, including the clamping head.



Flanges / drawtube adapters / drawtubes

The flange and the drawtube adapter create the connection between the clamping device and machine spindle. This allows you the flexibility to use your clamping devices on different machines.

The flanges are already configured for the different spindle standards. The drawtube adapter and the drawtube are adapted individually to your machine. This makes it possible to comply with special requirements imposed by machine builders, such as sealing relative to the drawtube.

Key advantages

- Flange: Standard flange for the major spindle norms
- Drawtube adapters / drawtube: Individually configured for your machine

Your benefits

- On-site design and safety calculation are not required
- Time saving through plug & play solution

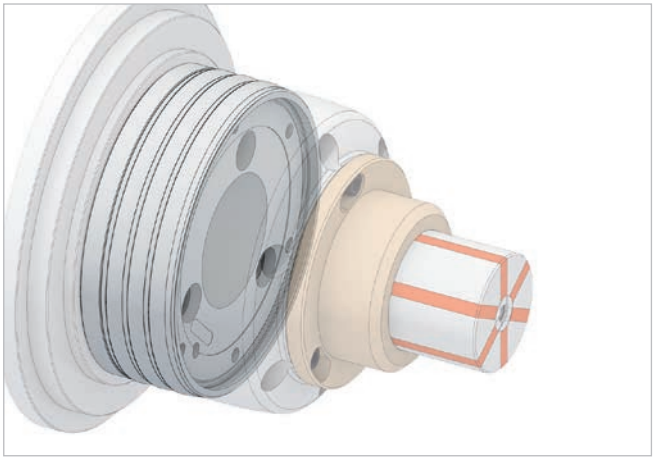

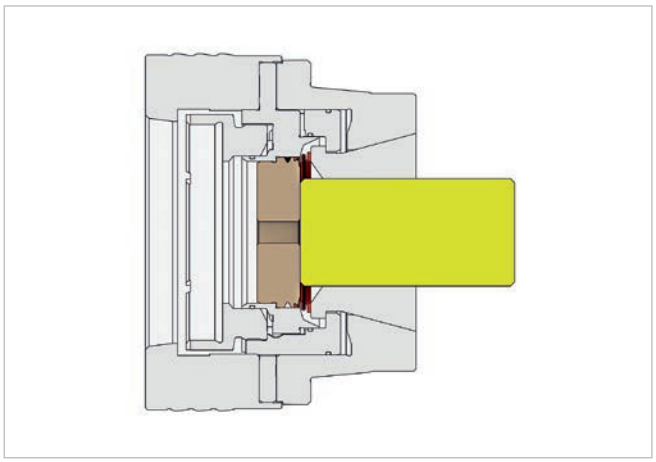

MANDO / MAXXOS mandrels. Flanges

Size	Figure	Spindle nose DU	Flange height [mm] AP	Interface X	Outer Ø [mm] AW	Bolt hole circle V	In stock	Material no.
XXS – 4 / A – F	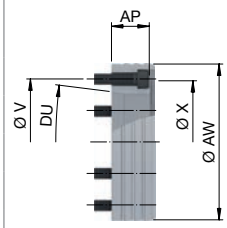	A2-4	40	Ø 131	140	LK Ø 82,6 [3 x M10]	✔	10014772
		A2-5	40			LK Ø 104,8 [6 x M10]	✔	10014771
			77				✔	10014781
			85				✔	10014782
		A2-6	40		165	LK Ø 133,4 [6 x M12]	✔	10014770
			60				✔	10014783
			80				✔	10014784
			100				✔	10014785
		A2-8	44		210	LK Ø 171,4 [6 x M16]	✔	10014773
	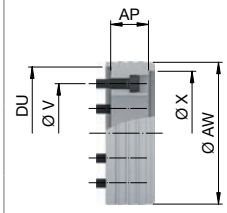	AP120	40		140	LK Ø 104,8 [6 x M10]	✔	10014774
		AP140			150		✔	10014775
		AP170			180	LK Ø 133,4 [6 x M12]	✔	10014776
		AP220			230	LK Ø 171,4 [6 x M16]	✔	10014777
5 – 7	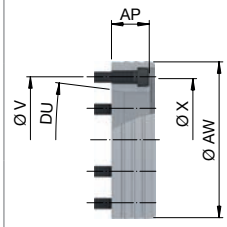	A2-6	63,5	Ø 219	235	LK Ø 133,4 [6 x M12]	✔	10014778
		A2-8	67,5			LK Ø 171,4 [6 x M16]	✔	10014779
		A2-11	73,5		280	LK Ø 235 [6 x M20]	✔	10014780

Machine spindle standard DIN ISO 702-1.
Flanges size 5 – 7 AP upon request.

InoFlex manual / power chucks. Flanges for short taper

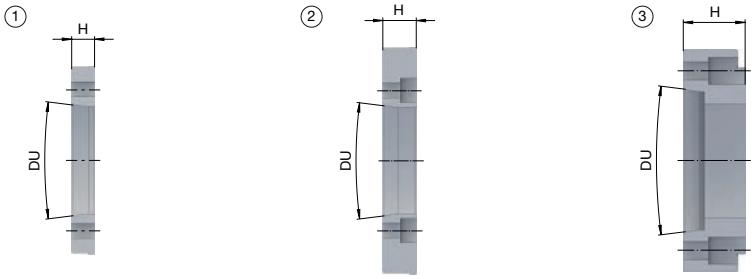

Size	Suitable for	Spindle nose DU	Designation	Flange type	Length [mm] H	In stock	Material no.
165	VD / VT-S	A2-5	VZ165	1	17	✔	10014728
		A2-6	VZ166	3	46	✔	10014729
		A2-8	VZ168		35	✔	10014730
215	VD / VT-S	A2-5	VZ265	2	25	✔	10014736
		A2-6	VZ266	1	17	✔	10014737
		A2-8	VZ268	3	44	✔	10014738
260/315	VD [size 260/315] / VT-S [size 260]	A2-6	VZ366	2	28	✔	10014744
		A2-8	VZ368	1	19	✔	10014745
		A2-11	VZ3611	3	47	✔	10014746
315	VT-S	A2-8	VZ468	2	30	✔	10014751
		A2-11	VZ4611	1		✔	10014752

Machine spindle standard DIN DIN 55026 / ISO 702-1.

InoFlex manual / power chucks. Flanges for short taper with bayonet



Size	Suitable for	Spindle nose DU	Designation	Flange type	Length [mm] H	In stock	Material no.
165	VD / VT-S	A2-5	VZ175	1	17	✔	10014731
		A2-6	VZ176	2	46	✔	10014732
		A2-8	VZ178		34	✔	10014733
215	VD / VT-S	A2-5	VZ275	1	19	✔	10014739
		A2-6	VZ276			✔	10014740
		A2-8	VZ278	2	40	✔	10014741
260/315	VD [size 260/315] / VT-S [size 260]	A2-6	VZ376	1	28	✔	10014747
		A2-8	VZ378			✔	10014748
315	VT-S	A2-8	VZ478	1	36	✔	10014753
		A2-11	VZ4711			✔	10014754

Machine spindle standard DIN 55027 / ISO 702-3.

InoFlex manual / power chucks. Flanges for short taper with camlock

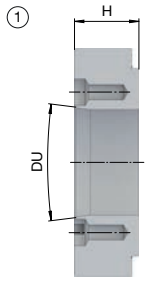

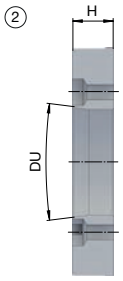

Size	Suitable for	Spindle nose DU	Designation	Flange type	Length [mm] H	In stock	Material no.
165	VD / VT-S	A2-5	VZ195	2	48	✔	10014734
		A2-6	VZ196		52,5	✔	10014735
215	VD / VT-S	A2-5	VZ295	1	30	✔	10014742
		A2-6	VZ296	2	55	✔	10014743
260/315	VD [size 260/315] / VT-S [size 260]	A2-6	VZ396	1	34	✔	10014749
		A2-8	VZ398		56	✔	10014750
315	VT-S	A2-8	VZ498	1	38	✔	10014755
		A2-11	VZ4911		52	✔	10014756

Machine spindle standard DIN DIN 55029 / ISO 702-2.

B-Top jaw chuck. Flanges

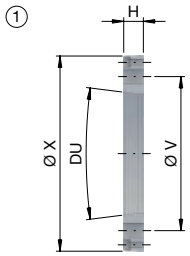

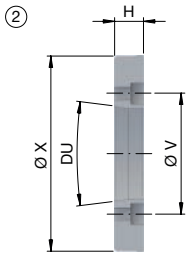

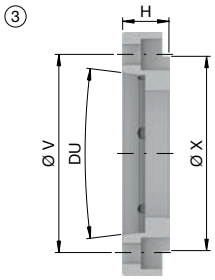

Size	Spindle nose DU	Flange type	Interface X	Length [mm] H	Bolt hole circle V	In stock	Material no.
165	A2-4	2	Ø 140	21	LK Ø 82,6 [6 x M10]	✔	10014760
	A2-5	1		16	LK Ø 104,8 [6 x M10]	✔	10014761
	A2-6	3		34	LK Ø 133,4 [6 x M12]	✔	10014762
215	A2-5	2	Ø 170	25	LK Ø 104,8 [6 x M10]	✔	10014763
	A2-6	1		17	LK Ø 133,4 [6 x M12]	✔	10014764
	A2-8	3		40	LK Ø 171,4 [6 x M16]	✔	10014765
260/315	A2-5	2	Ø 220	28	LK Ø 104,8 [6 x M10]	✔	10014766
	A2-6				LK Ø 133,4 [6 x M12]	✔	10014767
	A2-8	1		19	LK Ø 171,4 [6 x M16]	✔	10014768
	A2-11	3		50	LK Ø 235 [6 x M16]	✔	10014769

Machine spindle standard DIN 55026.

B-Top3 jaw chuck. Flanges

④

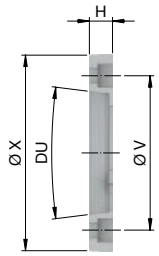

⑤

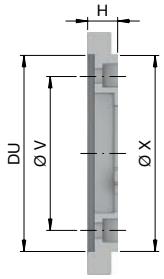

Size	Spindle nose DU	Flange type	Interface X	Length [mm] H	Bolt hole circle V	In stock	Material no.
215	A2-6	4	Ø 170	20	LK Ø 133,4 [6 x M12]	✔	10014757
	A2-8			37	LK Ø 171,4 [6 x M16]	✔	10014758
	AP170	5		20	LK Ø 133,4 [6 x M12]	✔	10014759

Machine spindle standard DIN 55026.

TOROK, TOROK CFK, and actuating unit ms dock [size XXS - 4]. Flanges

Size	Figure	Spindle nose DU	Length 2 [mm] BS	Interface X	Interface hole circle Y	Outer Ø [mm] AW	Bolt hole circle V	Variant	In stock	Material no.
52	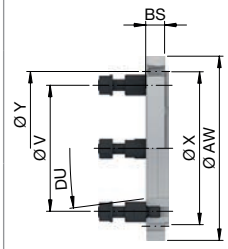	A2-5	20	Ø 145 g5	LK Ø 156 [6 x M8]	195	LK Ø 104,8 [4 x M10]	Adjustable bolt DIN ISO 702-3 M10x43	✔	10000220
		A2-6					LK Ø 133,4 [4 x M12]	Adjustable bolt DIN ISO 702-3 M12x50	✔	10000221
		A2-8				210	LK Ø 171,4 [4 x M16]	Adjustable bolt DIN ISO 702-3 M16x60	✔	10000222
65		A2-5	20	Ø 162 g5	LK Ø 176 [6 x M8]	195	LK Ø 104,8 [4 x M10]	Adjustable bolt DIN ISO 702-3 M10x43	✔	10000223
		A2-6					LK Ø 133,4 [4 x M12]	Adjustable bolt DIN ISO 702-3 M12x50	✔	10000224
		A2-8				210	LK Ø 171,4 [4 x M16]	Adjustable bolt DIN ISO 702-3 M16x60	✔	10000225
80/100		A2-5	26,5	Ø 240 g5	LK Ø 235 [6 x M10]	260	LK Ø 104,8 [4 x M10]	Adjustable bolt DIN ISO 702-3 M10x43	✔	10015276
		A2-6	20				LK Ø 133,4 [4 x M12]	Adjustable bolt DIN ISO 702-3 M12x50	✔	10015277
		A2-8	26,5				LK Ø 171,4 [4 x M16]	Adjustable bolt DIN ISO 702-3 M16x60	✔	10015278

Camlock flange [DIN 55029] on request.

TOPlus / SPANNTOP chucks and MAXXOS / MANDO mandrels. Drawtube adapters

Product	Description	Sizes	In stock	Material no.
Drawtube adapters	Connects your clamping device with the drawtube to the machine. We require your spindle data for configuration.	Chucks up to size 100 and mandrels	-	F17010
		Chuck from size 125	-	F17010

Drawtube adapter order form see page 604.

TOPlus / SPANNTOP chucks and MAXXOS / MANDO mandrels. Drawtube

Product	Description	Sizes	In stock	Material no.
Drawtube	Transmits the motion of the machine's clamping cylinder to the drawtube adapter. To design this solution we need the spindle and clamping cylinder drawing, as well as the designation of the clamping device. The balance quality can be adapted to customer requirements. Anti-rust coating is possible.	All chuck and mandrel sizes	-	F17030

Drawtube adapter order form see page 604.

Adapter for air sensing control



Adapter for air sensing control

With the adapter for air sensing control the air system can be integrated in a mandrel with minimal assembly effort. It is the connecting link between air lance and end-stop surface on the mandrel. Screwing in the adapter in the MANDO / MAXXOS mandrel seals it on the connection side. The air lance that is routed out of the machine spindle and into the mandrel is sealed with an O-ring. Now the force is transmitted via the O.D. thread that is attached on the mandrel.

Key advantages

- Enables workpiece scan for mandrels
- Fast and easy assembly
- Sealed to the media tube

Your benefits

- Process reliability through workpiece scan
- Reduction of scrap
- Basis for automation

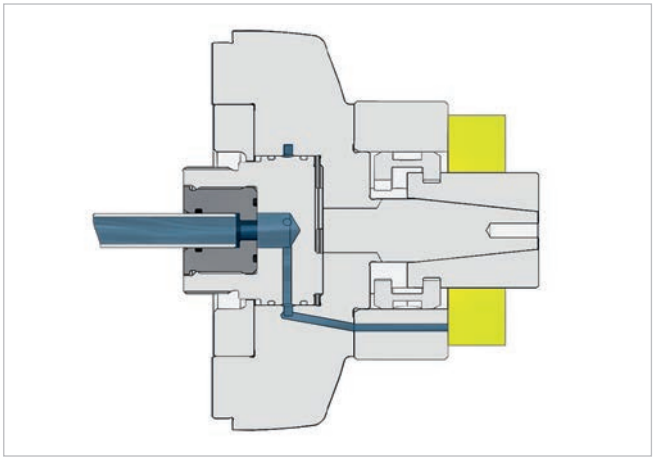

Mandrels MANDO T211 / T212 / MAXXOS T211. Adapter for air sensing control

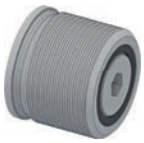

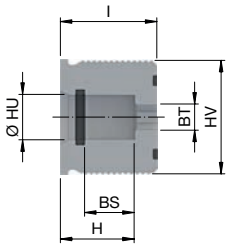

Size	Inner Ø [mm] HU	Total length [mm] l	Length [mm] H	Length 2 [mm] BS	Wrench size [SW] BT	Thread size HV	In stock	Material no.
XXS – 4 / A – F	12 H7	25,5	19,5	13	6	M30 x 1,5	✔	10000133

The adapter is screwed into the M30 x 1.5 inner thread of the MANDO or MAXXOS mandrel and is used as a location of the air lance.
For force actuation, please use the M44 x 1.5 O.D. thread.

Base plate for TOROK



Base plate for stationary use

The base plate enables stationary use of the TOROK manual chuck. Thus the TOROK can be used on different machines. Sensitive clamping, including use of different adaptation possibilities, is available for stationary machining.

By means of the integrated slotted holes the base plate can be used on almost all major T-groove machine tables.

Key advantages

- Enables stationary use of the TOROK manual chuck
- Rotation-symmetric interference contour and thus use of the TOROK's full rotational speed
- Flexible use on major T-groove machine tables

Your benefits

- Cost saving through machine-independent use of the TOROK

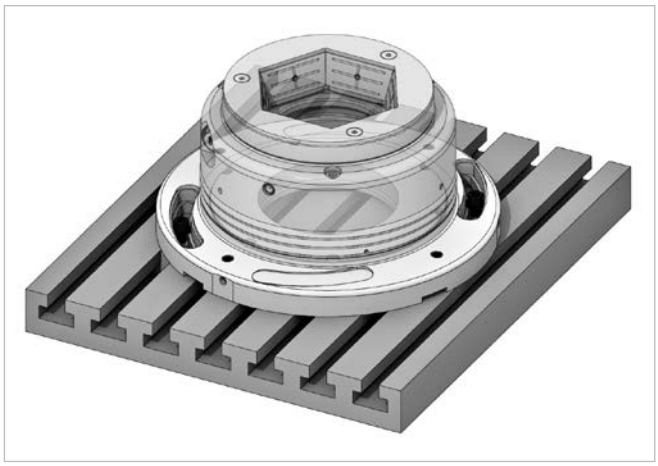

TOROK manual chuck. Base plate for stationary use

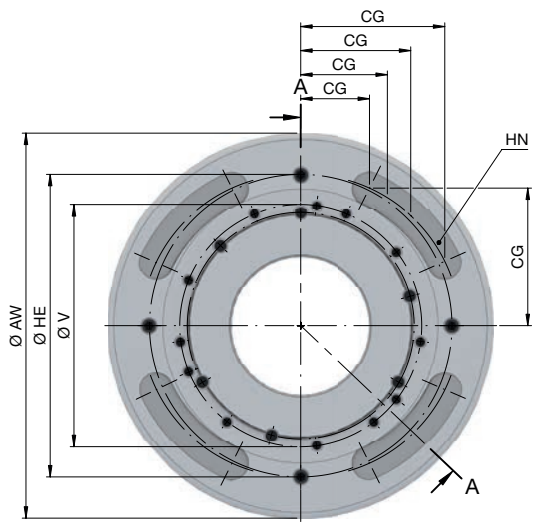

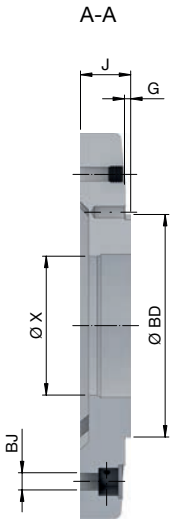

Size		52 SE / RD	65 SE / RD	80/100 SE / RD
Bolt hole circle	V	**LK Ø 156 [6 x M8]**	**LK Ø 176 [6 x M8]**	**LK Ø 234 [6 x M10]**
Flange location	BD	Ø 145 g5	Ø 162 g5	Ø 240 f7
Interface	X	Ø 101 H7		Ø 140 H7
Outer Ø [mm]	AW	280		350
Height [mm]	J	36	36,5	35
Centering length [mm]	G	4	4,5	3,5
Mounting slots for T-groove table with groove spacing [mm]	CG	50, 63, 80, 100		
Groove width [mm]	BJ	12,5		13,5
Protective cover	HN	4x		
Torsional safety	HE	220 [4 x M10]		300 [4 x M10]
Weight [kg]		10,5	10,7	17
In stock		✔	✔	✔
Material no.		10001437	10001436	10001434

Adaptation sets for MANDO G211



Adaptation sets for MANDO G211

The MANDO G mandrel and the ms / hs dock actuating units, the mandoteX quick change-over interface, and various flanges all have inner fits and thus can be directly connected.

With these adaptation sets the connection is made quickly and easily. The set consists of a ring and a drawtube adapter. The ring is centered on the inner fit of the MANDO G, and on the interface of the actuating unit / the quick change-over interface or of the flange. The drawtube adapter is screwed into the mandrel and connects the connecting thread of the actuating unit with the mandrel.

Key advantages

- Connection between MANDO G mandrel and ms / hs dock actuating units, mandoteX quick change-over interface or flange

Your benefits

- Fast and easy assembly



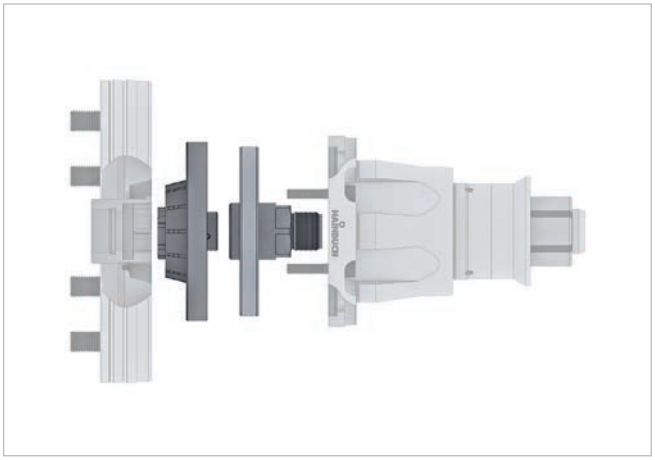

For connection of the ms / hs dock actuating units

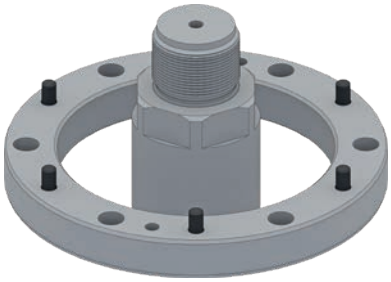

Product	In stock	Material no.
Adaptation set	✔	10001404

For connection of MANDO / MAXXOS standard flanges



Product	In stock	Material no.
Adaptation set	✔	10018246

For connection on the mandoteX quick change-over interface

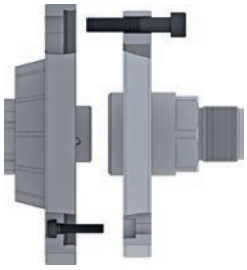

Product	In stock	Material no.
Adaptation set	✔	10001405

Incl. mandoteX clamping device adapter

Tandem cylinder / base plate for HYDROK



Tandem cylinder / base plate for HYDROK

With the HYDROK base plate the »small« HYDROKs [40 SE / 32 RD] can be mounted on the machine table incl. media connection. To place multiple HYDROKs on the machine table, the individual base plates are simply fitted together. Thus, you benefit from multiple clamping with incredible holding forces in a very small space.

The tandem cylinder is always used in conjunction with the base plate and enables full clamping force at minimal actuating pressure.

Key advantages

- Base plate: for assembly of the HYDROK on the machine table including media connection
- Tandem cylinder: enables the max. clamping force of the HYDROK at half the actuating pressure

Your benefits

- Base plate: easy and fast assembly, multiple clamping in a very small space
- Tandem cylinder: optimized clamping through max. clamping force



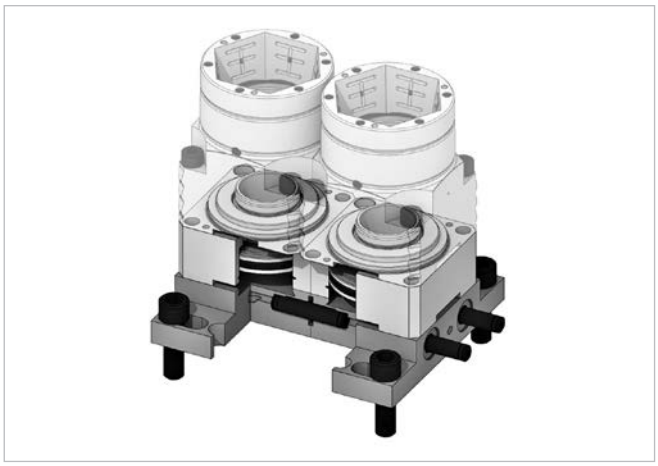

HYDROK stationary chuck size 40 SE / 32 RD. Tandem cylinder

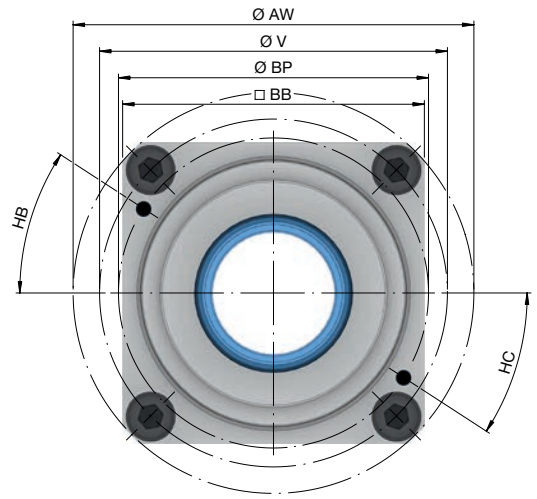

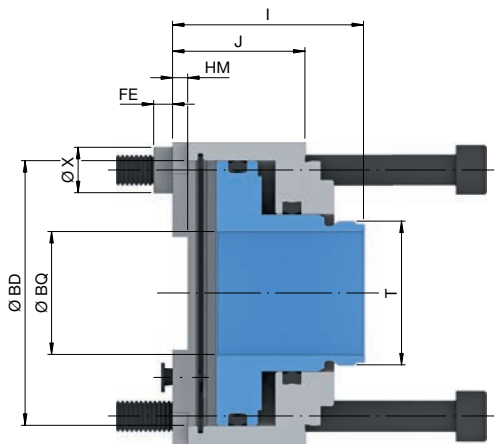

Product line		SE/RD
Size		**40/32**
Max. axial drawtube force [pull / push] [kN]		13,5
Max. actuating pressure [bar]		55
Outer Ø [mm]	AW	106 g6
Bolt hole circle	V	LK Ø 92 [4 x M8]
Interface	X	Ø 12 H7
Height [mm]	J	35
Ø Capacity [mm]	BQ	32,5
Flange location	BD	Ø 70 H7/g7
Centering height 1 [mm]	FE	5
Outer variant [mm]	BB	79,8
Connecting position [mm]	BP	82
Clamping via base plate [°]	HB	33
Release via base plate [°]	HC	33
Installation depth [mm]	HM	5 +0,005
Total length [mm]	I	50,5
Connecting thread outside	T	M38 x 1
In stock		✔
Material no.		10000451

With adaptation of the tandem cylinder to HYDROK size 40 SE, the maximum clamping force of 75 kN can be achieved, even at 43 bar.
With adaptation of the tandem cylinder to HYDROK size 32 RD, the maximum clamping force of 70 kN can be achieved, even at 50 bar.

Tandem cylinder / base plate for HYDROK

HYDROK stationary chuck size 40 SE / 32 RD. Base plate

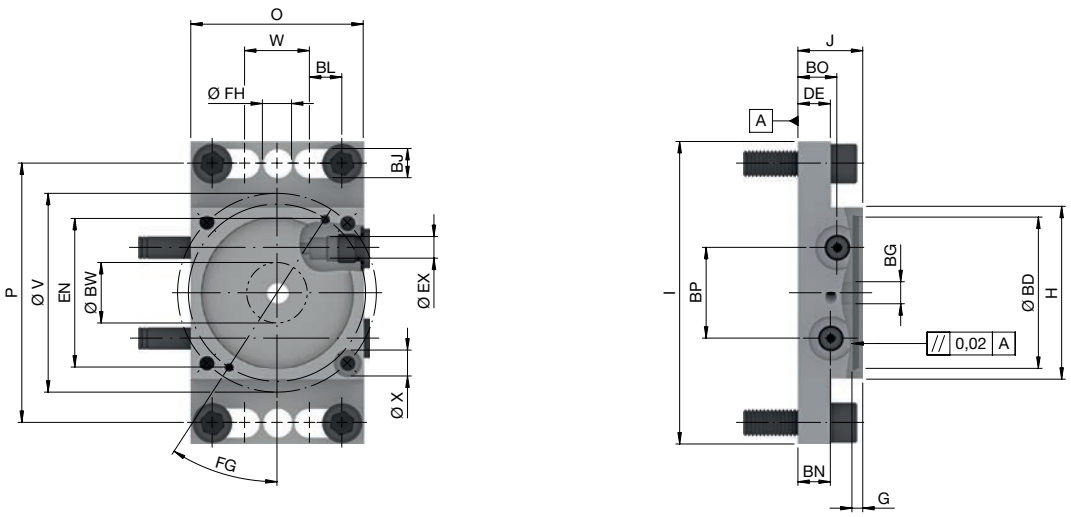

Product line		SE/RD
Size		**40/32**
Bolt hole circle	V	LK Ø 92 [4 x M8]
Interface	X	Ø 12 H7
Release	BN	15 [1/4"]
Clamping	BO	18 [1/4"]
Clamping edge height [mm]	DE	15
Length [mm]	H	80
Total length [mm]	I	140
Height [mm]	J	30
Width [mm]	O	79,8
Flange location	BD	Ø 70 H7
End-stop thread size [M]	BG	12
Connecting position [mm]	BP	42
Centering length [mm]	G	5
Max. permissible turning Ø [mm]	BW	28
Grooves [mm]	BL	15 [4 x]
Bolt hole distance [mm]	W	30
Fitting bore	EX	10 H11
Groove width [mm]	BJ	13,5
Screw connection width [mm]	P	120
Fluid connection 1 [mm]	EN	69,5
Angle position [°]	FG	33
Bore-Ø	FH	13,5
In stock		✔
Material no.		10001435

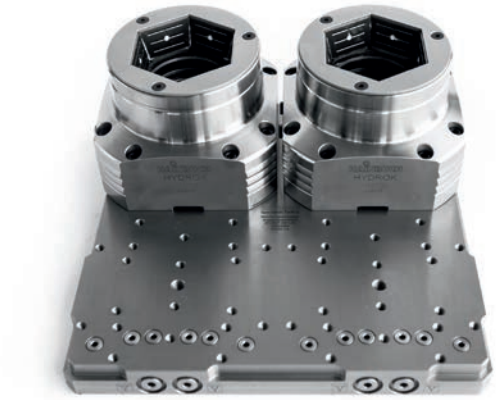

Multiple clamping pallets

The multiple clamping pallets are expansions for the HYDROK hydraulic stationary chucks and the hs dock actuating units. A plate makes it possible to actuate up to four hydraulic clamping devices simultaneously.

Through the pre-bored bolt hole circles the clamping devices can be easily bolted on and they are actuated through channels in the interior of the clamping plate. The bores for the hydraulics on the multiple clamping pallet can be sealed with screw plugs. Thus it is possible to adapt the number of clamping devices to the manufacturing process.

Key advantages

- Ideal for automated clamping
- For assembly of multiple hydraulic clamping devices in a row or in a square arrangement
- Central media activation for control of all clamping devices

Your benefits

- Better utilization of machine capacity
- Multiple clamping in a very small installation space
- Time saving through automated clamping

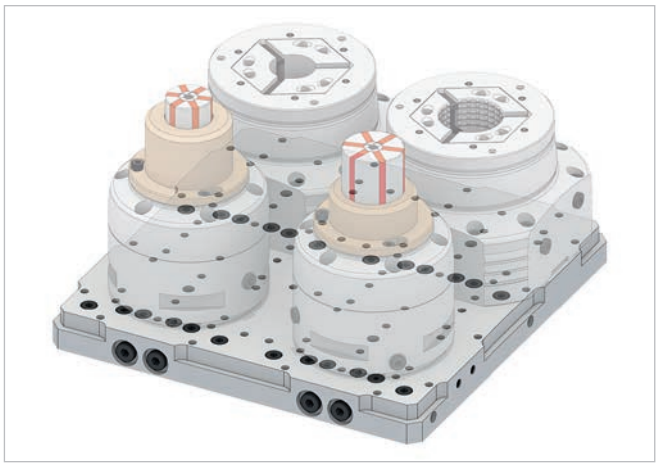

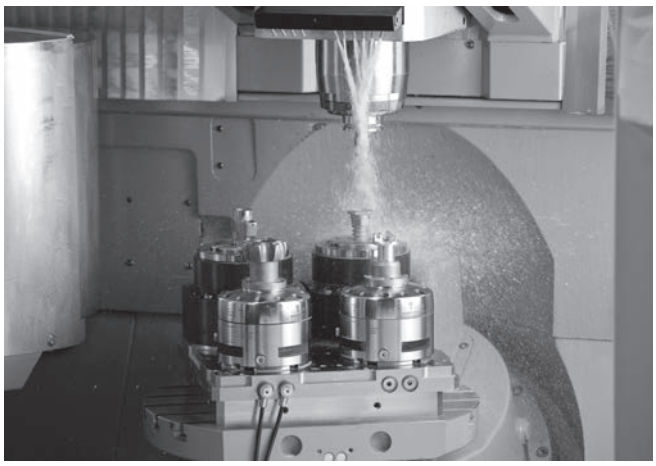

Multiple clamping pallets

Multiple clamping pallets. Technical data and order overview

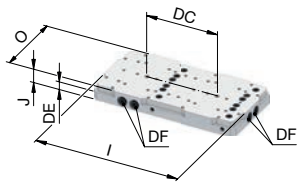

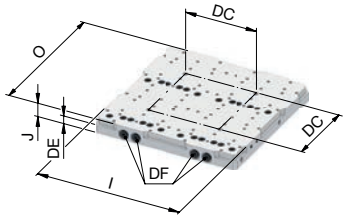

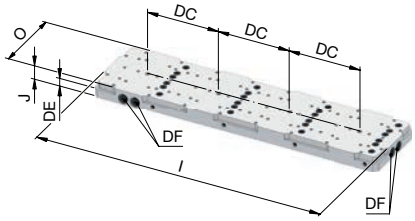

Size		2-fold	4-fold	
Variant		**In series**	**Angular**	**In series**
Linear dimensions of the clamping position [mm]	DC	180		
Parallelism [mm]		0,01		
Total length [mm]	l	360		720
Width [mm]	O	180	360	180
Height [mm]	J	35		
Clamping edge height [mm]	DE	20		
Connecting thread two-side [selectable connecting side]	DF	G1/4"		
Max. actuating pressure [bar]		100		
Weight [kg]		16,7	33	
In stock		✔	✔	✔
Material no.		10001431	10001433	10001432

Please note: The multiple clamping pallet is suitable for the HYDROK hydraulic stationary chuck size 65 SE / RD, the hs dock actuating unit size XXS - 4, and special stationary chucks that are available upon request.



Actuating units

Page 226



Stationary chucks

Page 252



hainBOX system for proper storage

The practical hainBOX storage system allows proper storage of your clamping heads. Safe actuation of the clamping head ensures successful machining. Both depend upon on the accuracy, cleanliness, and condition of the clamping head. In this respect, clean storage is a component of high process reliability.

The hainBOX is made of high-impact ABS plastic, so the clamping head is safely protected from damage and contamination. The transparent lid enables easy bore size identification of the clamping head within the hainBOX.

The individual hainBOXes can be stowed in drawers or cabinets. The hainBOX for TOPlus and SPANNTOP is available for clamping heads in sizes 40, 42, 52, 65, 80 and 100.

Key advantages

- Storage system for clamping heads
- Protects the clamping head from contamination and damage
- Stackable

Your benefits

- Higher process reliability and accuracy
- Reduction of set-up times thanks to good »clamping head organization« and no need of repeated cleaning of the clamping head

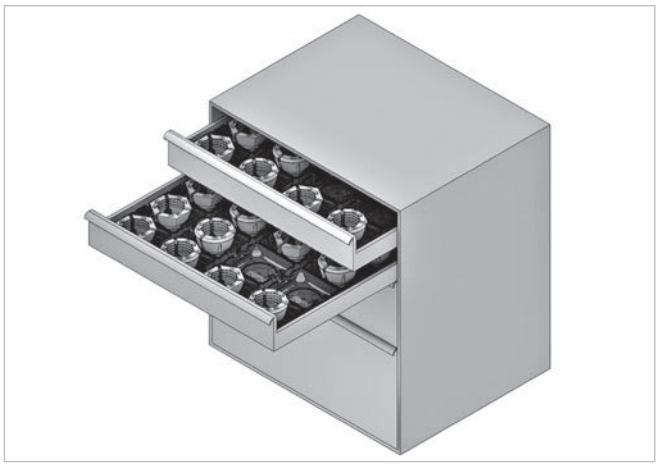

hainBOX system for proper storage

Product	Figure	Suitable for	Max. total length of clamping head [mm]	Length [mm]	Width [mm]	Height [mm]	In stock	Order no.
hainBOX 52	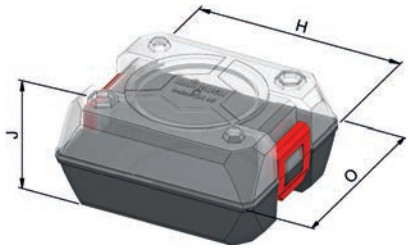	TOP40 TOP40HSW	47,2	118,9	103,4	63	✔	10017173
		TOP40G	44				✔	10017172
		SK42BZIG SK42BZIHSW	42				✔	10017171
		TOP52 TOP52G TOP52HSW SK42BZI	47				✔	10017169
		SK52BZI SK52 BZIG SK52BZIHSW	46				✔	10017170
hainBOX 65		TOP65 TOP65G TOP65HSW	49	134	118	72	✔	10001387
		SK65BZI	58				✔	10001389
		SK65BZIG SK65BZIHSW	53				✔	10001388
hainBOX 100		TOP80 TOP80G TOP80HSW SK80BZI SK80BZIG SK80BZIHSW	53	199,3	179,3	73,8	✔	10017174
		TOP100 TOP100G SK100BZ SK100BZG SK100BZHSW	59				✔	10017175

When you purchase a clamping head, a hainBOX in the correct size is always included.



Changing fixtures

The changing fixture allows safe and easy insertion and removal of the clamping head. This allows you to quickly change your clamping device over to a different clamping diameter or to one of our adaptations.

The changing fixtures are available in a manual or pneumatic version, with wheel or 2-hand safety operation. In this regard, the PPGV is especially suited for use with vertical machines.

Note: Whether you use TOPlus and/or SPANNTOP clamping heads, you need only one universal manual changing fixture for each size [42/52, 65 and 80]. It can even be used to change clamping heads with an extension length of up to 19 mm.

Key advantages

- Set-up device for changing clamping heads
- Ergonomic handle
- Manual and pneumatic version available

Your benefits

- Saves time when setting up
- Changing fixture that is ideally matched to the HAINBUCH clamping head
- Comfortable work through perfect ergonomics
- Only one changing fixture per size [42/52, 65 and 80] for TOPlus and SPANNTOP clamping heads

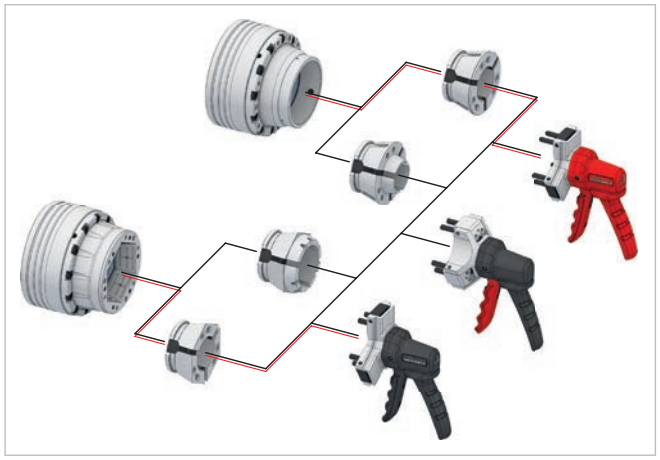

Changing fixtures for clamping heads

Variant	Figure	Description	Size	Suitable for	Min. actuating pressure [bar]	Type	Weight [kg]	In stock	Material no.
Manual		Standard	26	SE		mqtop26	1	✔	10007002
			32	SE/RD		mq32		✔	10006985
			40	SE		mqtop40		✔	10007003
			42	RD		mq42	1,1	✔	10006986
		Universal	42/52	SE/RD [front nose extension up to 19 mm]		mq-uni42/52	2,3	✔	10019111
			65			mq-uni65	2,6	✔	10019112
			80			mq-uni80	2,9	✔	10019113
		With wheel	100	SE		mvtop100	3,4	✔	10007008
				RD		mv100		✔	10007006
Pneumatic		Standard	32	RD	6	pp32	1,9	✔	10007095
			42			pp42		✔	10007096
			42/52	SE/RD		pp42/52	2	✔	10007098
			65			pp65	2,2	✔	10007100
			80			pp80	2,5	✔	10007102
			100	SE		pptop100	2,8	✔	10007114
				RD		pp100		✔	10007093
		2-hand operation	100	RD	6	ppg100	3	✔	10007103
			120			ppg120		✔	10007104
			125			ppg125		✔	10007105
			140			ppg140	3,5	✔	10007106
			160			ppg160		✔	10007107
		2-hand operation / for vertical machines	100	RD	6	ppgv100	3	✔	10007108
			120			ppgv120	3,5	✔	10007109
			125			ppgv125		✔	10007110
			140			ppgv140		✔	10007111

Variant	Figure	Description	Size	Suitable for	Min. actuating pressure [bar]	Type	Weight [kg]	In stock	Material no.
Pneumatic		2-hand operation / for vertical machines	140	RD	6	ppgv140	3,5	✔	10007111
			160			ppgv160	3,8	✔	10007112
		2-hand operation	160	SE	6		3,5	-	10019114

Please note:
mq 42 and pp 42: for clamping heads with one changing fixture bore per segment
mq 42/52 an pp 42/52: for clamping heads with a minimum of two changing fixture bores per segment
Optimal changing fixtures for multi spindle starting on page 564.

Scope of delivery

- Changing fixture
- Changing fixture holder

Changing fixture holder

Product	Figure	Application	In stock	Material no.
Changing fixture holder		Fits all standard changing fixtures except mqtop26, ppg160 and ppgv160.	✔	10000693

Alignment set



Alignment set

The alignment set allows precise alignment of your chuck to the machine within µm accuracy, to ensure that your parts comply with the required run-out. All you have to do is insert the measuring clamping head, clamp the test shaft, and align the chuck. The set saves you time and includes everything you need for the job.

Key advantages

- Consists of measuring clamping head and test shaft
- Alignment of the chuck with µm precision

Your benefits

- Exact alignment ensures process reliability
- Saves time

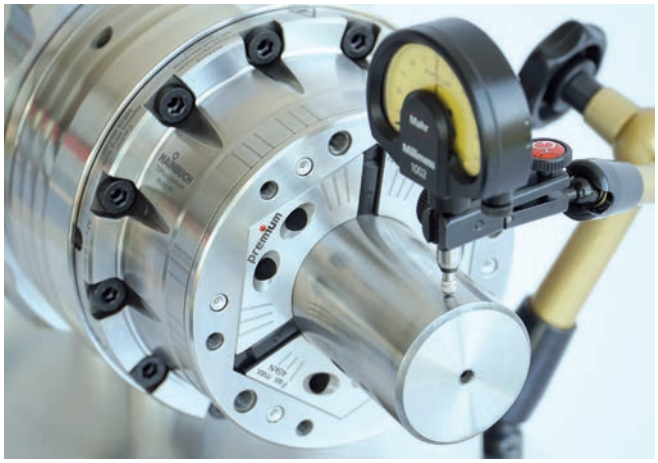

Alignment set [master clamping head + test shaft]. For alignment of the chuck with µm precision

Size	Figure	In stock	Material no.
26		✔	10018832
40		✔	10018833
52		✔	10018819
65		✔	10018820
80		✔	10018834
100		✔	10018835

Grease



Grease

To ensure the long service life of your clamping devices, they must be lubricated at regular intervals. Inadequate lubrication can result in malfunctions, reduced clamping force, and inaccuracies, as well as excessive wear extending to blocking of the clamping device.

Key advantages

- For lubrication of the clamping mechanism
- Constant low coefficient friction
- High bonding strength
- High resistance to pressure and water

Your benefits

- To maintain the mechanical function and clamping force
- Extension of the maintenance intervals

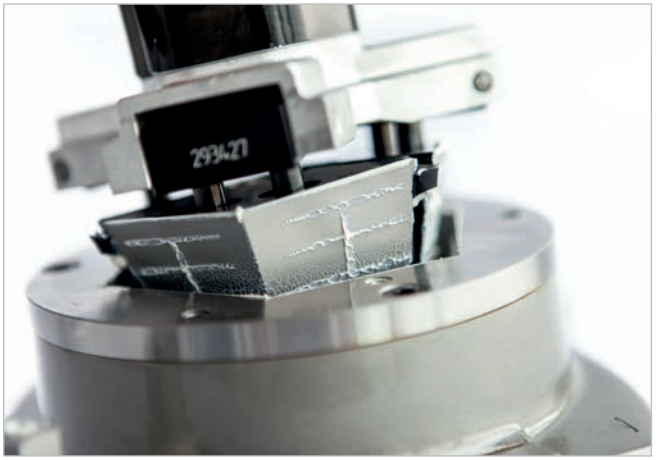



Grease

Product	Figure	Suitable for	Description	Packaging type	Content [g]	In stock	Material no.
Universal grease		High-pressure grease gun	For all chucks except eccentric chucks / InoFlex	Cartridge	500	✔	10001489
		Grease gun		Can	1000	✔	10001488
Special grease		High-pressure grease gun	For eccentric chucks	Cartridge	400	✔	10001491
			for InoFlex VD / VT-S / VF			✔	10001230
			for InoZet			✔	10001232
Special grease		Grease gun	For eccentric chucks	Can	1000	✔	10001490
Antiadhesion spray		All products	Reduces friction, wear and the adhesion between clamping element and clamping device. Ideally suited for service and maintenance tasks.	Spray can	400	✔	10007052

Antiadhesion spray is only sold in Europe.

Grease guns

Product	Figure	Description	In stock	Material no.
High-pressure grease gun		Including pointed mouth piece and flexible hose with mouth	✔	10001493
Grease gun		With pointed mouth piece	✔	10001492

B-Top / B-Top3 jaw chuck. Chip protection and wrench

Product	Figure	Size	In stock	Material no.
Chip protection	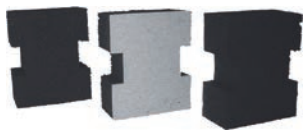	165/215	✔	10002033
		260	✔	10002034
		315	✔	10002035
Ejector wrench		165/215	✔	10002036
		260/315	✔	10002037
Assembly wrench	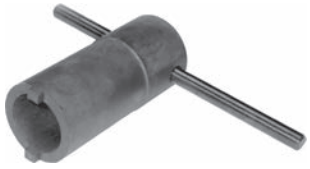	260	✔	10002038
		315	✔	10002039

Various accessories

Product	Figure	Description	Suitable for	In stock	Material no.
Adjustable end-stop		Lateral stop for positive stop jaws and movable jaws	InoFlex VF [VCF / VCB / VCG]	✔	10015066
Torque wrench		Torque wrench 10-100 Nm, flex ratchet handle, extension, hexagon socket wrench SW17 [inner and outer]	TOROK MANOK MANOK plus ms dock InoFlex VD InoFlex VF	✔	10001468
Mounting set		Set with 4 clamps for fastening the clamping vices on the machine table	InoFlex VF	✔	10015065
Allen key insert with journal pivot 1/2" connection		SW 5 mm	SPANNTOP mini pull-back size 32 / SPANNTOP mini deadlength size 32 / TOPlus mini pull-back size 26, 40 / TOPlus mini deadlength size 26, 40	✔	10001469
		SW 6 mm	SPANNTOP mini pull-back size 42, 52, 65, 80, 100 / SPANNTOP mini deadlength size 42, 52, 65, 80, 100 / TOPlus mini pull-back size 26, 52, 65, 80, 100 / TOPlus mini deadlength size 52, 65, 80, 100	✔	10001470

Services

Discover potentials and make provisions



Services product area



Consulting & engineering 548



Product service
- On-site installation
- On-site service
- Repair & spare parts
- Maintenance & reconditioning
- Service contract
- Clamping force measurement
- Factory calibration of TESTit
- 24-hr troubleshooting hotline

550

campus
Training & events 552

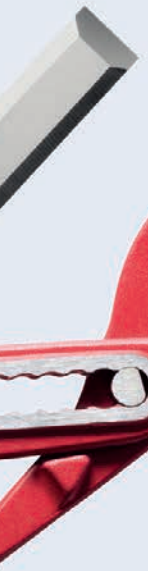

Take advantage of more than 70 years of experience in the development of clamping devices and process optimization. In this regard no challenge is too big, no quantity too small, and no distance too far.

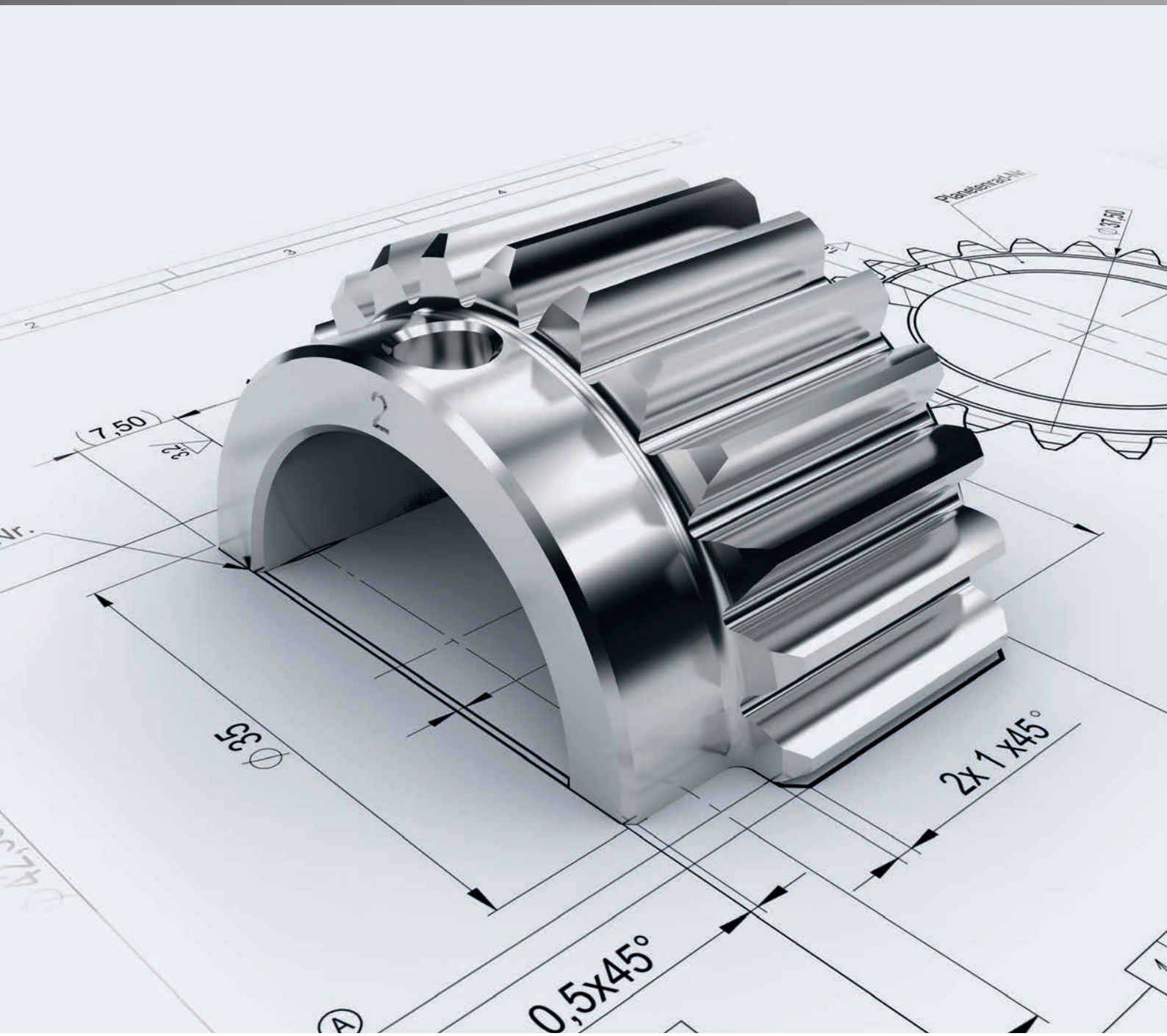



Consulting and production coaching

While you continue to produce we explore the savings potential for you.

80% less set-up time, 70% better roundness, 50% less scrap – these are the results achieved by our customers with HAINBUCH. Are you in need of optimization? Would you like to know how to boost the efficiency of your parts manufacturing processes? We will find the optimal solution, and that means: shorter set-up times, less machining time and reduced costs.

Our services

- Individual consultation and elaboration of details
- Support with on-site implementation, on request
- In-house tests in our facilities, with original workpieces
- Parts manufacturing for demonstration purposes and for measurement series
- Analysis and reporting of results, with recommendation
- In case you have capacity bottlenecks, we will be glad to design the parts manufacturing process

Engineering

If a suitable product does not yet exist, we will develop it for you.

You tell us what you need and we will develop the ideal product for your application. The more unusual and unique, the better. That is when our design engineers, and research and development specialists are in their element. What you get is a custom tailored solution, not an ordinary »off-the-shelf« product. Basically we start with a blank sheet of paper; all you have to do is define which of our services you would like to use.

By the way: We always determine w-t is effective and feasible for your particular application, such as sensors in the clamping device for automated measuring and monitoring for example.

Our services

- Analysis of your requirements
- Drawing up specification sheets, cost schedule and timetable
- Design, manufacturing drawing and prototype
- Documentation and presentation of the results
- Elastomer technology
- Composite fiber technology
- FEM calculations
- Sensors, actuators, mechatronics
- Customized clamping force measurement technology

Installation & commissioning

Our specialists take care of everything to ensure successful commissioning and smooth production processes – right from the start. You save time and money as machines are quickly available again, thanks to our competent instruction.

Our services

- Installation of the new clamping device
- Adjusting the clamping device
- Function test
- User instruction: Operation, maintenance & service, occupational health and safety

On-site service

Our service technicians provide on-site support in case of failures and difficulties. After an analysis of the situation, the necessary steps are taken.

Our services

- Root cause analysis: Disassembly and inspection of the clamping device
- If possible: On-site repair, assembly and alignment of the [replacement] clamping device
- Return transport for repair [in the case of smaller clamping devices]
- User instruction: Operation, maintenance & service, occupational health and safety

Repair & spare parts

If your clamping device should at some point no longer provide the customary performance – our service organization is ready. Fast repair and delivery of spare parts minimizes downtimes in your production.

Our services

- Profitability analysis with recommendation
- Repair or replacement of components
- Coating or re-vulcanization
- All work is carried out by HAINBUCH experts
- Fast availability of original HAINBUCH spare parts

Maintenance & reconditioning

Regular professional maintenance and optimal adjustment ensure that your clamping device always achieves the best results. More extensive repairs are avoided and wear-related failures are a thing of the past.

Our services

- Disassembling and cleaning the chuck
- Replacement of wear parts
- Checking the parts that are not replaced
- Assembling and adjusting the chuck
- Test log and report with recommendations
- Execution at HAINBUCH or on site

Service contract

A HAINBUCH service contract offers precisely the services that you require – no more, no less. At fixed, clearly calculated costs.

Our services

- Flexible drafting of your contract
- Possible components – as agreed: Clamping device inspection, maintenance, training, reconditioning, customer-specific stocking of spare parts, etc.

Clamping force measurement

Scrap due to deformation? Optimization of maintenance intervals? Checking of holding power / clamping force? You don't have your own measuring gauge? Our technicians provide on-site support.

Our services

- On-site clamping force measurement and logging
- Stationary measurement or at speed
- Two or three clamping positions, I.D. and O.D. clamping set-ups
- We have every standard measuring head that you might need
- In addition, we provide the clamping elements for measuring HAINBUCH clamping devices
- For custom diameters we manufacture measuring bolts for any diameter up to 120 mm

Factory calibration of TESTit

Do you use our TESTit clamping force gauges? Like all testing tools, TESTit gauges require regular inspection and calibration. Because there is nothing worse than a false sense of safety! Send us your TESTit and the service pass once a year, and we will take care of everything. Factory calibration must be carried out in accordance with ISO 10012.

Our services

- Function test
- Factory calibration based on ISO 10012
- Reference measuring equipment is DAkkS calibrated
- Detailed documentation
- Updating of service pass
- Preparation of the calibration certificate
- Return shipment

24-hr troubleshooting hotline +49 7144.907-444

We are happy to help, when things get jammed. When you call HAINBUCH, you are immediately connected with the right person, who knows our clamping devices inside out. That means your problem will be quickly resolved and you can return to normal work.

Our services

- Fast help if there is a crash or emergency
- Direct line to HAINBUCH experts
- Often a solution to the problem is available in minutes

Your »campus« academy

Individual and practically oriented, with a solid knowledge base



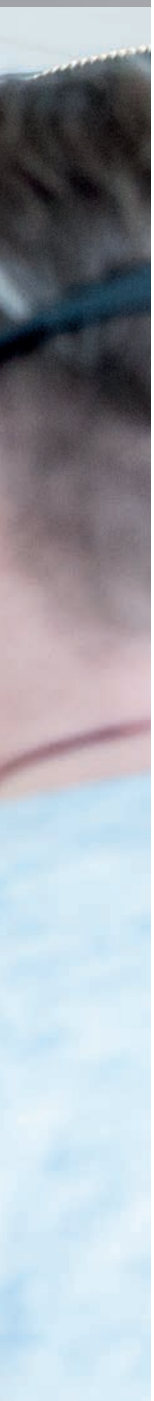

Stay on the ball and perfect your processes and your production, also with a view toward digitization and automation.

HAINBUCH campus

TRAININGS

Standard or custom tailored – just as you wish.

- Maintenance training
- Precision training
- Individual training

WORKSHOPS

Many-faceted and practically oriented. For beginners and experts.

- »Set-up, clamping and machining« workshop
  Subject: Workpiece analysis and the effects on production planning, provision of information in the CAM system, set-up, and the right choice of workholding technology in practice.

WEBINARS

Expertise from a specialist – and from the convenience of your workplace.

- Gear cutting webinar
- Workholding technology webinar
- I.D. clamping webinar
- Automation webinar
- Efficient small and large series manufacturing webinar
- Milling webinar
- Reducing set-up times webinar

For more information contact your local subsidiary or campus@hainbuch.de

Overview

Find what’s important fast



Equipment for multi spindle

GILDEMEISTER	Gildemeister	564
INDEX	INDEX	570
Schütte	Schütte	581
TORNOS	Tornos	595

Multi spindle

Two cost-effective systems



Automated manufacturing with our feedfingers, or flexible, functional and user friendly set-up work with our SPANNTOP system: Both are extremely economical, offer significant extension possibilities and fulfill the most demanding tasks.

Key advantages

- Reduced set-up times due to modular systems
- Increased production due to longer runtimes and maintenance intervals
- Significantly reduced marking on bar material
- Lower inventory through multiple use of individual modules

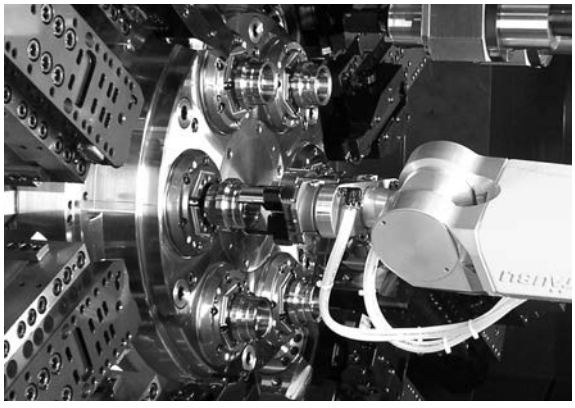

Photo: INDEX-Werke GmbH & Co. KG



SPANNTOP system

In terms of functionality, flexibility and user friendly set-up of multi spindles, our SPANNTOP system is just the right partner.

The system consists of an elastic clamping part, the clamping head, a rigid pipe part and the basic body. Both parts are coupled together to form a single unit that has the outer contour of a conventional clamping collet. Installation in the spindle nose is easy.

Key advantages

- Easy clamping head change-over from the front
- Long lifespan through case-hardened steel
- Typical HAINBUCH features, such as parallel clamping, optimal power conversion, extreme stiffness and high holding power, as well as little wear and tear

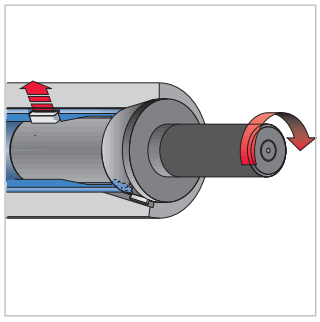

The basic body is installed or removed with an assembly aid.

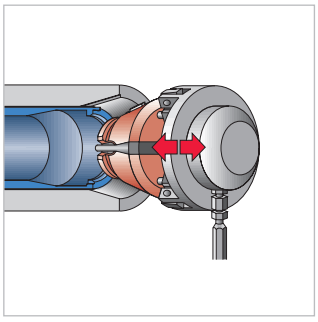

Use a changing fixture that is inserted into the face holes to collapse the segments of the clamping head far enough to the inside that it can uncouple easily.

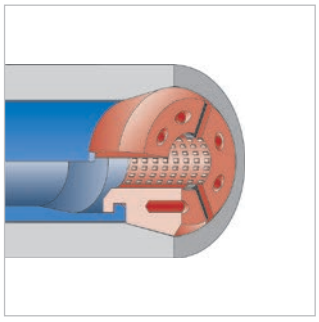

The System BZ

- Simple »original« coupling
- Used wherever there are no space or wall thickness problems

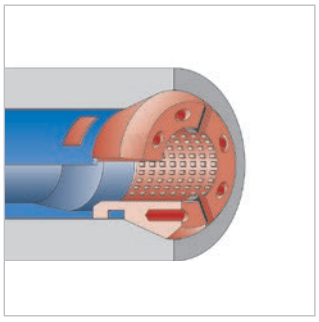

The System ZW

- Coupling type especially for multi spindles
- Offers more capacity with the same outer geometry



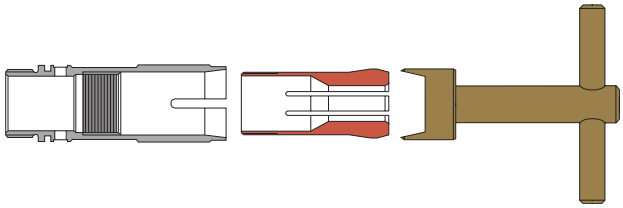

RS feedfingers

HAINBUCH feedfingers have set standards with their adjustable thrust force. The tasks and requirements are diverse: various materials, high RPM, feed speeds and process reliability.

The inner collet is screwed into the outer sleeve with a special wrench. A marking ring on the inner collet in conjunction with a scale on the outer sleeve provides reference values of the level of thrust force.

Key advantages

- Adjustable thrust force, thus reduced abrasion and wear
- Significantly reduced marking on bar material
- Multi-slot inner collet fits on the bar, thereby resulting in minimal wear
- Inner collet can be adjusted multiple times, resulting in a longer lifespan

Variants

In most application cases you are absolutely right with the selection of our steel inner collets. If you have more rigorous requirements on the surface condition of the bar material, then with the 3 variants below you have all possibilities to prevent bothersome scoring on the material.

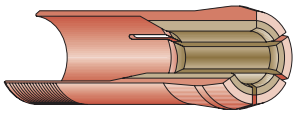

KSB [plastic coating]
This coating is recommended wherever an absolutely score-free and scratch-free surface is required. Profiles can be worked in.

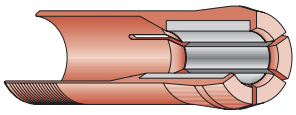

OXK [ceramic coating]
The extraordinary hardness of the ceramic coating prevents »build up« and »smearing« in the bores. Particularly recommended for rust-resistant and acid-resistant steels. The extremely long service life makes it suitable for continuous-operation machines with bar feeders. Only available for round dimensions.

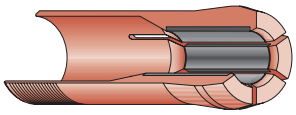

HM [carbide coating]
Characteristics and implementation recommendations similar to those specified for the ceramic coating. Steel brass and SPH inner collets have particularly proven themselves as cost-effective alternatives for rust-resistant and acid-resistant steels, to prevent scoring.

Retrofit

Older machines gain profit from conversion to a modern clamping system. If the possibility exists to exchange the collet location in the spindle drum with TOPlus locations with hexagon clamping geometry, the clamping system can fully exploit its advantages due to the full-surface support of the clamping head, which is resistant to contamination. You will particularly notice it through the rigidity when recessing and the lower cycle times, since in most cases machining parameters can be increased.

Regardless of whether you are giving your machine a general overhaul, or are only replacing the clamping system. With conversion to our hexagon clamping heads, you have a genuine alternative compared to purchasing a new machine but at a significantly lower investment.

Retrofit – modern and more efficient.

Key advantages

- Get more capacity out of your machine: Conversion from conventional collets to hexagon clamping heads
- Higher rigidity than with round clamping elements
- Significantly higher resistance to contamination
- Cycle time reduction is possible through increased machining parameters
- Ensures less tool wear and thus reduces costs and machine downtimes

Detail

Designation	
1 TOPlus unit [with exchange of the previous collet fixture] 2 Clamping head 3 Basic body	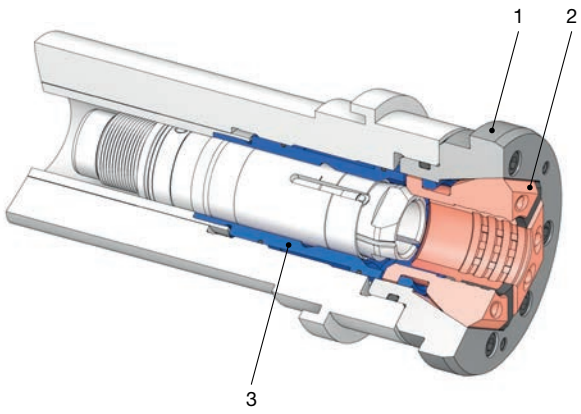

EQUIPMENT FOR MULTI SPINDLE

Selection

Here’s how to select your equipment



The equipment categories

	Standard equipment	Special equipment
Description	The standard equipment fits on a variety of Gildemeister, INDEX, Schütte and Tornos machines. In this regard, we make a distinction between SPANNTOP system, RS system and conventional clamping collets.	The special equipment is based on the same principle as the standard equipment. However, in this case all components can be specially adapted to your requirements.
	Page 564	Upon request

Gildemeister GM 20 / AS 16-20 / GS 20. Main spindle

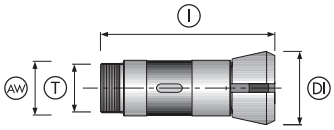


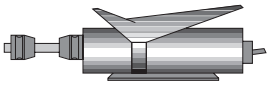

Product variants	Product	Profile	Clamping Ø [mm] BU	Outer Ø [mm] AW	Head Ø [mm] DI	Connecting thread outside T	Total length [mm] l	In stock	Material no.
SPANNTOP BZ	Basic body BZ			34	42	M30 x 1 - LH	90	-	10009440
	Clamping head BZ	●	6,0 - 20,0					-	sk9012bzr6,0-20,0
		■	8,0 - 9,0					-	sk9012bzv8,0-9,0
			10,0 - 14,0					-	sk9012bzv10,0-14,0
		⬢	7,0 - 9,0					-	sk9012bzs7,0-9,0
			10,0 - 17,0					-	sk9012bzs10,0-17,0
	Hydraulic changing fixture							✔	10014565
	Manual changing fixture							✔	10007001
	Pneumatic pressure converter							-	10014711
	Assembling aid							-	10006700
Conventional	Collet	●	4,0 - 20,0	34	42	M30 x 1 - LH	90	-	9012er4,0-20,0
		■	7,0 - 9,0					-	9012ev7,0-9,0
			10,0 - 14,0					-	9012ev10,0-14,0
		⬢	7,0 - 9,0					-	9012es7,0-9,0
			10,0 - 17,0					-	9012es10,0-17,0

Feed tube

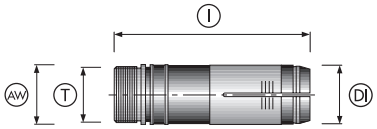



Product variants	Product	Profile	Clamping Ø [mm] BU	Outer Ø [mm] AW	Head Ø [mm] DI	Connecting thread outside T	Total length [mm] l	In stock	Material no.
RS system	Outer sleeve			24,6	25	M24 x 1	90	✔	10006234
	Inner collet steel	●	4,0 - 18,0					✔	rs20/st/r4,0-18,0
		■	4,0 - 9,0					-	rs20/st/v4,0-9,0
			10,0 - 12,0					-	rs20/st/v10,0-12,0
		⬢	4,0 - 9,0					-	rs20/st/s4,0-9,0
			10,0 - 14,5					-	rs20/st/s10,0-14,5
	Inner collet steel brass	●	4,0 - 18,0					-	rs20/sb/r4,0-18,0
		■	4,0 - 9,0					-	rs20/sb/v4,0-9,0
			10,0 - 12,0					-	rs20/sb/v10,0-12,0
		⬢	4,0 - 9,0					-	rs20/sb/s4,0-9,0
			10,0 - 14,5					-	rs20/sb/s10,0-14,5

Product variants	Product	Profile	Clamping Ø [mm] BU	Outer Ø [mm] AW	Head Ø [mm] DI	Connecting thread outside T	Total length [mm] I	In stock	Material no.
RS system	Inner collet SPH	●	4,0 - 18,0					-	rs20/sph/r4,0-18,0
		■	4,0 - 9,0					-	rs20/sph/v4,0-9,0
			10,0 - 12,0					-	rs20/sph/v10,0-12,0
		⬢	4,0 - 9,0					-	rs20/sph/s4,0-9,0
			10,0 - 15,0					-	rs20/sph/s10,0-15,0
	Inner collet KSB	●	5,0 - 16,0					-	rs20/ksb/r5,0-16,0
		■	5,0 - 9,0					-	rs20/ksb/v5,0-9,0
			10,0 - 11,0					-	rs20/ksb/v10,0-11,0
		⬢	5,0 - 9,0					-	rs20/ksb/s5,0-9,0
			10,0 - 14,0					-	rs20/ksb/s10,0-14,0
	Inner collet OXK	●	3,1 - 16,0					-	rs20/oxk/r3,1-16,0
	Wrench							✔	10008166
Conventional	Feedfinger	●	4,0 - 20,0	24,6	25	M24 x 1	90	-	9258er4,0-20,0
		■	7,0 - 9,0					-	9258ev7,0-9,0
			10,0 - 14,0					-	9258ev10,0-14,0
		⬢	7,0 - 9,0					-	9258es7,0-9,0
			10,0 - 16,5					-	9258es10,0-16,5
	Guide ring for feed tube	●	4,0 - 20,0					✔	9258e/fr4,0-20,0
		■	7,0 - 9,0					-	9258e/fv7,0-9,0
			10,0 - 14,0					-	9258e/fv10,0-14,0
		⬢	7,0 - 9,0					-	9258e/fs7,0-9,0
			10,0 - 17,0					-	9258e/fs10,0-17,0

SPH = special cast coating; KSB = plastic coating; OXK = oxidized ceramic coating

Sub spindle

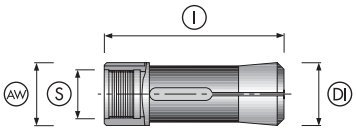

Product	Profile	Clamping Ø [mm] BU	Outer Ø [mm] AW	Head Ø [mm] DI	Connecting thread inside S	Total length [mm] I	In stock	Material no.
Pick-off collet	●	4,0 - 20,0	26	28,5	M21,5 x 0,75	80	-	9012e/gr4,0-20,0
	■	7,0 - 9,0					-	9012e/gv7,0-9,0
		10,0 - 14,0					-	9012e/gv10,0-14,0
	⬢	7,0 - 9,0					-	9012e/gs7,0-9,0
		10,0 - 17,0					-	9012e/gs10,0-17,0

Gildemeister AS 20-25. Main spindle

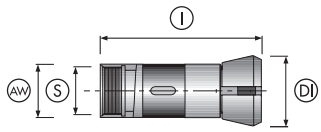

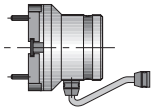
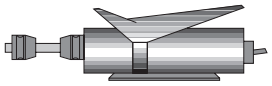

Product variants	Product	Profile	Clamping Ø [mm] BU	Outer Ø [mm] AW	Head Ø [mm] DI	Connecting thread inside S	Total length [mm] l	In stock	Material no.
SPANNTOP BZ	Basic body BZ			38	45,5	M34,5 x 0,75 - LH	90	-	10009441
	Clamping head BZ	●	6,0 - 25,0					-	sk9012bz-2r6,0-25,0
		■	8,0 - 9,0					-	sk9012bz-2v8,0-9,0
			10,0 - 17,0					-	sk9012bz-2v10,0-17,0
		⬢	8,0 - 9,0					-	sk9012bz-2s8,0-9,0
			10,0 - 21,0					-	sk9012bz-2s10,0-21,0
	Hydraulic changing fixture							-	wv.0226.0004.00
	Pneumatic pressure converter							-	10014711
	Assembling aid							-	10006701
Conventional	Collet	●	4,0 - 25,0	38	45,5	M34,5 x 0,75 - LH	90	-	9012e-2r4,0-25,0
		■	7,0 - 9,0					-	9012e-2v7,0-9,0
			10,0 - 17,0					-	9012e-2v10,0-17,0
		⬢	7,0 - 9,0					-	9012e-2s7,0-9,0
			10,0 - 20,0					-	9012e-2s10,0-20,0

Feed tube

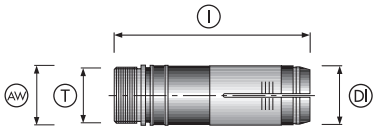



Product variants	Product	Profile	Clamping Ø [mm] BU	Outer Ø [mm] AW	Head Ø [mm] DI	Connecting thread outside T	Total length [mm] l	In stock	Material no.
RS system	Outer sleeve			30,5	30,5	M28,5 x 0,75	90	✔	10006194
	Inner collet steel	●	4,0 - 22,0					✔	rs24/st/r4,0-22,0
		■	5,0 - 9,0					-	rs24/st/v5,0-9,0
			10,0 - 15,0					-	rs24/st/v10,0-15,0
		⬢	5,0 - 9,0					-	rs24/st/s5,0-9,0
			10,0 - 19,0					-	rs24/st/s10,0-19,0
	Inner collet steel brass	●	4,0 - 21,0					-	s24/sb/r4,0-21,0
		■	5,0 - 9,0					-	rs24/sb/v5,0-9,0
			10,0 - 15,0					-	rs24/sb/v10,0-15,0
		⬢	5,0 - 9,0					-	rs24/sb/s5,0-9,0
			10,0 - 19,0					-	rs24/sb/s10,0-19,0

Product variants	Product	Profile	Clamping Ø [mm] BU	Outer Ø [mm] AW	Head Ø [mm] DI	Connecting thread outside T	Total length [mm] l	In stock	Material no.
RS system	Inner collet SPH	●	4,0 - 21,0					-	rs24/sph/r4,0-21,0
		■	6,0 - 9,0					-	rs24/sph/v6,0-9,0
			10,0 - 14,0					-	rs24/sph/v10,0-14,0
		⬢	6,0 - 9,0					-	rs24/sph/s6,0-9,0
			10,0 - 17,0					-	rs24/sph/s10,0-17,0
	Inner collet KSB	●	5,0 - 19,5					-	rs24/ksb/r5,0-19,5
		■	5,0 - 9,0					-	rs24/ksb/v5,0-9,0
			10,0 - 14,0					-	rs24/ksb/v10,0-14,0
		⬢	5,0 - 9,0					-	rs24/ksb/s5,0-9,0
			10,0 - 18,0					-	rs24/ksb/s10,0-18,0
	Inner collet OXK	●	5,0 - 20,0					-	rs24/oxk/r5,0-20,0
			20,1 - 21,0					-	rs24/oxk/r20,1-21
	Wrench							✔	10008167
Conventional	Feedfinger	●	4,0 - 25,0	30,5	30,5	M28,5 x 0,75	90	-	9258e-2r4,0-25,0
		■	7,0 - 9,0					-	9258e-2v7,0-9,0
			10,0 - 17,0					-	9258e-2v10,0-17,0
		⬢	7,0 - 9,0					-	9258e-2s7,0-9,0
			10,0 - 20,0					-	9258e-2s10,0-20,0
	Guide ring for feed tube	●	4,0 - 22,0					✔	9258e/f2r4,0-22,0
		■	7,0 - 9,0					-	9258e/f2v7,0-9,0
			10,0 - 15,0					-	9258e/f2v10,0-15,0
		⬢	7,0 - 9,0					-	9258e/f2s7,0-9,0
			10,0 - 19,0					-	9258e/f2s10,0-19,0

SPH = special cast coating; KSB = plastic coating; OXK = oxidized ceramic coating

Sub spindle

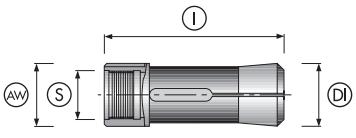

Product	Profile	Clamping Ø [mm] BU	Outer Ø [mm] AW	Head Ø [mm] DI	Connecting thread inside S	Total length [mm] l	In stock	Material no.
Pick-off collet	●	4,0 - 20,0	26	28,5	M21,5 x 0,75	80	-	9012e/gr4,0-20,0
	■	7,0 - 9,0					-	9012e/gv7,0-9,0
		10,0 - 14,0					-	9012e/gv10,0-14,0
	⬢	7,0 - 9,0					-	9012e/gs7,0-9,0
		10,0 - 17,0					-	9012e/gs10,0-17,0

Gildemeister AS 32 / GS 32 / GM 32. Main spindle

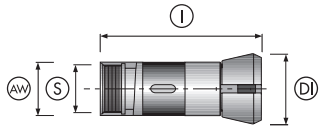

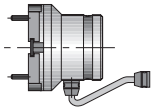
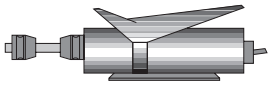

Product variants	Product	Profile	Clamping Ø [mm] BU	Outer Ø [mm] AW	Head Ø [mm] DI	Connecting thread inside S	Total length [mm] l	In stock	Material no.
SPANNTOP BZ	Basic body BZ			53	69,4	M48 x 1,5 - LH	135	-	10009453
	Clamping head BZ	●	6,0 - 32,0					✔	sk6970bzr6,0-32,0
		■	7,0 - 9,0					-	sk6970bzv7,0-9,0
			10,0 - 22,0					-	sk6970bzv10,0-22,0
		⬢	7,0 - 9,0					-	sk6970bzs7,0-9,0
			10,0 - 27,0					-	sk6970bzs10,0-27,0
	Hydraulic changing fixture							✔	10014563
	Pneumatic pressure converter							-	10014711
	Assembling aid							✔	10006705
	Manual changing fixture							✔	10006995
Conventional	Collet	●	4,0 - 32,0	53	69,4	M48 x 1,5 - LH	128	-	9069er4,0-32,0
		■	7,0 - 9,0					-	9069ev7,0-9,0
			10,0 - 22,0					-	9069ev10,0-22,0
		⬢	7,0 - 9,0					-	9069es7,0-9,0
			10,0 - 27,0					-	9069es10,0-27,0

Feed tube

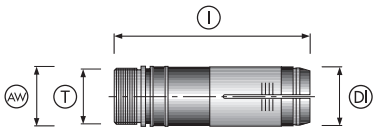



Product variants	Product	Profile	Clamping Ø [mm] BU	Outer Ø [mm] AW	Head Ø [mm] DI	Connecting thread outside T	Total length [mm] l	In stock	Material no.
RS system	Outer sleeve			39,8	40	M38 x 1,5 - LH	124	✔	10006322
						M38 x 1,5		✔	10006321
	Inner collet steel	●	4,0 - 32,0					✔	rs32/st/r4,0-32,0
		■	7,0 - 9,0					-	rs32/st/v7,0-9,0
			10,0 -21,0					-	rs32/st/v10,0-21,0
		⬢	7,0 - 9,0					-	rs32/st/s7,0-9,0
			10,0 - 27,0					-	rs32/st/s10,0-27,0
	Inner collet steel brass	●	4,0 - 32,0					-	rs32/sb/r4,0-32,0
		■	7,0 - 9,0					-	rs32/sb/v7,0-9,0
			10,0 - 22,0					-	rs32/sb/v10,0-22,0
		⬢	7,0 - 9,0					-	rs32/sb/s7,0-9,0
			10,0 - 27,0					-	rs32/sb/s10,0-27,0

Product variants	Product	Profile	Clamping Ø [mm] BU	Outer Ø [mm] AW	Head Ø [mm] DI	Connecting thread outside T	Total length [mm] l	In stock	Material no.
RS system	Inner collet SPH	●	4,0 - 32,0					-	rs32/sph/r4,0-32,0
		■	7,0 - 9,0					-	rs32/sph/v7,0-9,0
			10,0 - 22,0					-	rs32/sph/v10,0-22,0
		⬢	7,0 - 9,0					-	rs32/sph/s7,0-9,0
			10,0 - 27,0					-	rs32/sph/s10,0-27,0
	Inner collet KSB	●	4,0 - 29,5					-	rs32/ksb/r4,0-29,5
		■	8,0 - 9,0					-	rs32/ksb/v8,0-9,0
			10,0 - 22,0					-	rs32/ksb/v10,0-22,0
		⬢	8,0 - 9,0					-	rs32/ksb/s8,0-9,0
			10,0 - 27,0					-	rs32/ksb/s10,0-27,0
	Inner collet OXK	●	6,0 - 20,0					-	rs32/oxk/r6,0-20,0
			20,1 - 26,5					-	rs32/oxk/r20,1-26,5
	Wrench							✔	10008171
Conventional	Feedfinger	●	4,0 - 32,0	39,8	40	M38 x 1,5 - LH	136	-	9316er4,0-32,0
		■	7,0 - 9,0					-	9316ev7,0-9,0
			10,0 - 22,0					-	9316ev10,0-22,0
		⬢	7,0 - 9,0					-	9316es7,0-9,0
			10,0 - 27,0					-	9316es10,0-27,0
	Guide ring for feed tube	●	4,0 - 32,0					-	9316e/f-vr4,0-32,0
		■	7,0 - 9,0					-	9316e/f-vrv7,0-9,0
			10,0 - 22,0					-	9316e/f-vrv10,0-22,0
		⬢	7,0 - 9,0					-	9316e/f-vrs7,0-9,0
			10,0 - 27,0					-	9316e/f-vrs10,0-27,0
	Support ring for bar guiding system	●	4,0 - 32,0					-	9316e/f-srr4,0-32,0
		■	7,0 - 9,0					-	9316e/f-srv7,0-9,0
			10,0 - 22,0					-	9316e/f-srv10,0-22,0
		⬢	7,0 - 9,0					-	9316e/f-srs7,0-9,0
			10,0 - 27,0					-	9316e/f-srs10,0-27,0

SPH = special cast coating; KSB = plastic coating; OXK = oxidized ceramic coating

Sub spindle



Product	Description	Profile	Clamping Ø [mm] BU	Outer Ø [mm] AW	Head Ø [mm] DI	Connecting thread inside S	Total length [mm] l	In stock	Material no.
Pick-off collet	Triple slotted	●	4,0 - 32,0	38	43	M24 x 1,5	80	-	9069e/gr4,0-32,0
		■	7,0 - 9,0					-	9069e/gv7,0-9,0
			10,0 - 22,0					-	9069e/gv10,0-22,0
		⬢	7,0 - 9,0					-	9069e/gs7,0-9,0
			10,0 - 27,0					-	9069e/gs10,0-27,0
	Sextuple slotted	●	4,0 - 32,0	39	44		82	-	90699h/gr4,0-32,0
		■	7,0 - 9,0					-	90699h/gv7,0-9,0
			10,0 - 22,0					-	90699h/gv10,0-22,0
		⬢	7,0 - 9,0					-	90699h/gs7,0-9,0
			10,0 - 27,0					-	90699h/gs10,0-27,0

INDEX MS 16. Main spindle

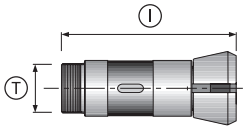



Product variants	Product	Profile	Clamping range [mm]	Type of serration	Increments [mm]	Connecting thread outside T	Total length [mm] l	In stock	Material no.
SPANNTOP BZ	Basic body BZ					M32 x 1	71	✔	10009428
	Clamping head BZI	●	4,0 - 7,0	Smooth	1			✔	sk16bzir4,0-7,0
			8,0 - 10,0	Radial grooves				✔	sk16bzir8,0-10,0
			11,0 - 16,0	Radial and axial grooves				✔	sk16bzir11,0-16,0
		■	7,0 - 9,0	Smooth				-	sk16bziv7,0-9,0
			10,0 - 11,0	Radial grooves				-	sk16bziv10,0-11,0
		⬢	7,0 - 9,0	Smooth				-	sk16bzis7,0-9,0
			10,0 - 13,0	Radial grooves				-	sk16bzis10,0-13,0
	Assembling aid							✔	10006683
	Manual changing fixture							✔	10007001

Synchron spindle

Product variants	Product	Variant	Profile	Clamping range [mm]	Type of serration	Increments [mm]	Particularity	In stock	Material no.
SPANNTOP BZ	SPANNTOP chuck	Combi deadlength						✔	10001866
	Clamping head BZI		●	4,0 - 16,0	Smooth	0,5	No front nose	✔	sk16bzig4,0-16,0

Feed tube

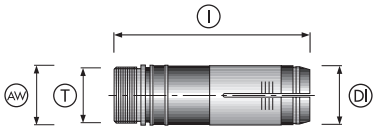





Product variants	Product	Description	Profile	Clamping Ø [mm] BU	Outer Ø [mm] AW	Head Ø [mm] DI	Connecting thread outside T	Total length [mm] l	In stock	Material no.
RS system	Outer sleeve				25,7	16	M22 x 1	99	✔	10015488
	Inner collet steel		●	4,0 - 10,0					✔	rs12/st/r4,0-10,0
	Inner collet steel brass								-	rs12/sb/r4,0-10,0
	Inner collet SPH								-	rs12/sph/r4,0-10,0
	Inner collet KSB								-	rs12/ksb/r4,0-10,0
	Inner collet OXK								-	rs12/oxk/r4,0-10,0
	Wrench								✔	10008160

Product variants	Product	Description	Profile	Clamping Ø [mm] BU	Outer Ø [mm] AW	Head Ø [mm] DI	Connecting thread outside T	Total length [mm] l	In stock	Material no.
	Key to change the entire RS 12 unit								✔	10000197
RS system	Outer sleeve	for Ø >8-16 for hexagon SW 10-13			25,7	25	M22 x 1	95	✔	10015489
		for hexagon SW 4-10							✔	10000193
	Inner collet steel		●	4,0 - 16,0					✔	rs20/st/r4,0-16,0
			■	4,0 - 9,0					-	rs20/st/v4,0-9,0
				10,0 - 12,0					-	rs20/st/v10,0-12,0
			⬢	4,0 - 9,0					-	rs20/st/s4,0-9,0
				10,0 - 14,5					-	rs20/st/s10,0-14,5
	Inner collet steel brass		●	4,0 - 16,0					-	rs20/sb/r4,0-16,0
			■	4,0 - 9,0					-	rs20/sb/v4,0-9,0
				10,0 - 12,0					-	rs20/sb/v10,0-12,0
			⬢	4,0 - 9,0					-	rs20/sb/s4,0-9,0
				10,0 - 13,0					-	rs20/sb/s10,0-15,0
	Inner collet SPH		●	4,0 - 16,0					-	rs20/sph/r4,0-18,0
			■	4,0 - 9,0					-	rs20/sph/v4,0-9,0
				10,0 - 12,0					-	rs20/sph/v10,0-12,0
			⬢	4,0 - 9,0					-	rs20/sph/s4,0-9,0
				10,0 - 13,0					-	rs20/sph/s10,0-13,0
	Inner collet KSB		●	5,0 - 16,0					-	rs20/ksb/r5,0-16,0
			■	5,0 - 9,0					-	rs20/ksb/v5,0-9,0
				10,0 - 11,0					-	rs20/ksb/v10,0-11,0
			⬢	5,0 - 9,0					-	rs20/ksb/s5,0-9,0
				10,0 - 13,0					-	rs20/ksb/s10,0-13,0
	Inner collet OXK		●	3,1 - 16,0					-	rs20/oxk/r3,1-16,0
	Wrench								✔	10008166
	Key to change the entire RS 20 unit								✔	10000196

SPH = special cast coating; KSB = plastic coating; OXK = oxidized ceramic coating

INDEX MS 16 Plus. Main spindle

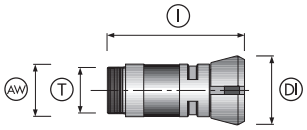



Product variants	Product	Profile	Clamping Ø [mm] BU	Connecting thread outside T	Total length [mm] l	In stock	Material no.
SPANNTOP ZW	Basic body ZW			M32 x 1	74	✔	10000189
	Clamping head ZW	●	4,0 - 22,0			✔	sk9022zwr4,0-22,0
	Assembling aid					✔	10006689
	Manual changing fixture					✔	10006984

Synchron spindle

Product variants	Product	Variant	Profile	Clamping Ø [mm] BU	Type of serration	Increments [mm]	In stock	Material no.
SPANNTOP ZW	SPANNTOP chuck	Combi deadlength					✔	10001724
	Clamping head ZW [smooth]		●	4,0 - 22,0	Smooth	0,5	✔	sk9022zwgr4,0-22,0

INDEX MS 22. Main spindle

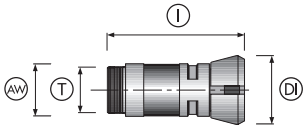



Product variants	Product	Profile	Clamping Ø [mm] BU	Outer Ø [mm] AW	Head Ø [mm] DI	Connecting thread outside T	Total length [mm] l	In stock	Material no.
SPANNTOP ZW	Basic body ZW			32,8	44,3	M1 x 29	103	✔	10015867
	Clamping head ZW	●	4,0 - 22,0					✔	sk9022zwr4,0-22,0
	Clamping head ZW [smooth]							✔	sk9022zwgr4,0-22,0
	Assembling aid							✔	10006689
	Manual changing fixture							✔	10006984
	Deadlength chuck for sub spindles							✔	10001718

INDEX MS 24. Main spindle

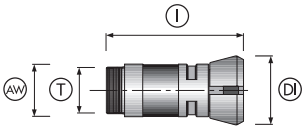



Product variants	Product	Profile	Clamping Ø [mm] BU	Outer Ø [mm] AW	Head Ø [mm] DI	Connecting thread outside T	Total length [mm] l	In stock	Material no.
SPANNTOP ZW	Basic body ZW			32,8	44,3	M1 x 29	103	✔	10015867
	Clamping head ZW	●	4,0 - 22,0					✔	sk9022zwr4,0-22,0
		■	7,0 - 9,0					-	sk9022zwv7,0-9,0
			10,0 - 14,0					-	sk9022zwv10,0-14,0
		⬢	7,0 - 9,0					-	sk9022zws7,0-9,0
			10,0 - 18,0					-	sk9022zws10,0-18,0
	Assembling aid							✔	10006689
	Manual changing fixture							✔	10006984
Conventional	Collet	●	22,1 - 24,0	36	44,3	M29 x 1	103	-	A019603.0034B
	Wrench							-	A090576.0004A

Boring unit

Product variants	Product	Profile	Clamping Ø [mm] BU	Outer Ø [mm] AW	Head Ø [mm] DI	Connecting thread outside T	Total length [mm] l	In stock	Material no.
SPANNTOP ZW	Clamping head ZW	●	4,0 - 22,0					✔	sk9022zwr4,0-22,0
		■	7,0 - 9,0					-	sk9022zwv7,0-9,0
			10,0 - 14,0					-	sk9022zwv10,0-14,0
		⬢	7,0 - 9,0					-	sk9022zws7,0-9,0
			10,0 - 18,0					-	sk9022zws10,0-18,0
Conventional	Collet	●	22,1 - 24,0	36	44,3	M29 x 1	103	-	A019603.0034B
	Wrench							-	A090576.0004A

Synchron spindle

Product	Variant	Profile	Clamping Ø [mm] BU	Type of serration	Increments [mm]	Particularity	In stock	Material no.
TOPlus chuck	Combi deadlength						✔	A108550.0004C
Clamping head SE		●	4,0 - 24,0	Smooth	0,5	No front nose	✔	top24gr4,0-24,0
Manual changing fixture	Manual						✔	10007002

INDEX MS 25. Main spindle

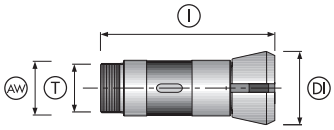

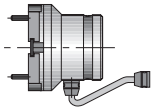
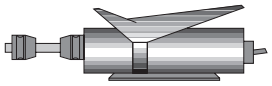

Product variants	Product	Profile	Clamping Ø [mm] BU	Outer Ø [mm] AW	Head Ø [mm] DI	Connecting thread outside T	Total length [mm] l	In stock	Material no.
SPANNTOP BZ	Basic body BZ			46	60,4	M40 x 1,5 - LH	120	✔	10009449
	Clamping head BZ	●	5,0 - 26,0					✔	sk9039bzr5,0-26,0
		■	7,0 - 9,0					-	sk9039bzv7,0-9,0
			10,0 - 18,0					-	sk9039bzv10,0-18,0
		⬢	7,0 - 9,0					-	sk9039bzs7,0-9,0
			10,0 - 22,0					-	sk9039bzs10,0-22,0
	Hydraulic changing fixture							-	10014562
	Pneumatic pressure converter							-	10014711
	Assembling aid							-	10006703
	Manual changing fixture							-	10006994
Conventional	Collet	●	6,0 - 28,0	46	60,4	M40 x 1,5 - LH	120	-	9039er6,0-28,0
		■	7,0 - 9,0					-	9039ev7,0-9,0
			10,0 - 18,0					-	9039ev10,0-18,0
		⬢	7,0 - 9,0					-	9039es7,0-9,0
			10,0 - 25,0					-	9039es10,0-25,0

Feed tube

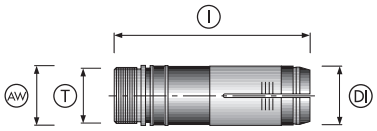



Product variants	Product	Profile	Clamping Ø [mm] BU	Outer Ø [mm] AW	Head Ø [mm] DI	Connecting thread outside T	Total length [mm] l	In stock	Material no.
RS system	Outer sleeve			35	33	M33 x 1,5	118	✔	10006307
	Outer sleeve – feeder design							-	10006270
	Inner collet steel	●	4,0 - 25,0					✔	rs25/st/r4,0-25,0
		■	7,0 - 9,0					-	rs25/st/v7,0-9,0
			10,0 - 17,0					-	rs25/st/v10,0-17,0
		⬢	6,0 - 9,0					-	rs25/st/s6,0-9,0
			10,0 - 22,0					-	rs25/st/s10,0-22,0
	Inner collet steel brass	●	4,0 - 25,0					-	rs25/sb/r4,0-25,0
		■	7,0 - 9,0					-	rs25/sb/v7,0-9,0
			10,0 - 17,0					-	rs25/sb/v10,0-17,0
		⬢	6,0 - 9,0					-	rs25/sb/s6,0-9,0
			10,0 - 22,0					-	rs25/sb/s10,0-22,0

Product variants	Product	Profile	Clamping Ø [mm] BU	Outer Ø [mm] AW	Head Ø [mm] DI	Connecting thread outside T	Total length [mm] I	In stock	Material no.
RS system	Inner collet SPH	●	4,0 - 25,0					-	rs25/sph/r4,0-25,0
		■	7,0 - 9,0					-	rs25/sph/v7,0-9,0
			10,0 - 17,0					-	rs25/sph/v10,0-17,0
		⬢	6,0 - 9,0					-	rs25/sph/s6,0-9,0
			10,0 - 22,0					-	rs25/sph/s10,0-22,0
	Inner collet KSB	●	7,0 - 23,5					-	rs25/ksb/r7,0-23,5
		■	7,0 - 9,0					-	rs25/ksb/v7,0-9,0
			10,0 - 17,0					-	rs25/ksb/v10,0-17,0
		⬢	7,0 - 9,0					-	rs25/ksb/s7,0-9,0
			10,0 - 21,0					-	rs25/ksb/s10,0-21,0
	Inner collet OXK	●	5,0 - 20,0					-	rs25/oxk/r5,0-20,0
			20,1 - 24,0					-	rs25/oxk/r20,1-24,0
	Wrench							✔	10008168
Conven-tional	Feedfinger	●	6,0 - 28,0	35	33	M33 x 1,5	118	-	9282er6,0-28,0
		■	7,0 - 9,0					-	9282ev7,0-9,0
			10,0 - 18,0					-	9282ev10,0-18,0
		⬢	7,0 - 9,0					-	9282es7,0-9,0
			10,0 - 22,0					-	9282es10,0-22,0
	Guide ring for feed tube	●	4,0 - 26,0					✔	9282e/f-msr4,0-26,0
		■	14,0 - 17,0					-	9282e/f-msv14,0-17,0
		⬢	17,0 - 22,0					-	9282e/f-mss17,0-22,0

SPH = special cast coating; KSB = plastic coating; OXK = oxidized ceramic coating

Synchron spindle

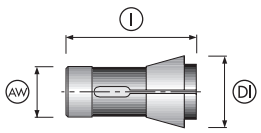

Product	Profile	Clamping Ø [mm] BU	Outer Ø [mm] AW	Head Ø [mm] DI	Total length [mm] I	In stock	Material no.
Pick-off collet	●	4,0 - 26,0	25	35,4	65	✔	9039e/syr4,0-26,0
	■	7,0 - 9,0				-	9039e/syv7,0-9,0
		10,0 - 14,0				-	9039e/syv10,0-14,0
	⬢	7,0 - 9,0				-	9039e/sys7,0-9,0
		10,0 - 17,0				-	9039e/sys10,0-17,0
Pick-off collet small model	●	4,0 - 21,0	25	31	54	-	14305h/syr4,0-21,0
	■	7,0 - 9,0				-	14305h/syv7,0-9,0
		10,0 - 14,0				-	14305h/syv10,0-14,0
	⬢	7,0 - 9,0				-	14305h/sys7,0-9,0
		10,0 - 17,0				-	14305h/sys10,0-17,0

INDEX MS 25. Main spindle

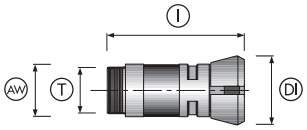

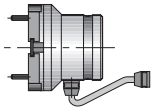
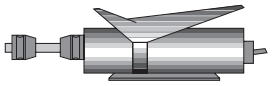

Product variants	Product	Profile	Clamping Ø [mm] BU	Outer Ø [mm] AW	Head Ø [mm] DI	Connecting thread outside T	Total length [mm] l	In stock	Material no.
SPANNTOP ZW	Basic body ZW			46	60,5	M40 x 1,5 - LH	120,5	-	10009448
	Clamping head ZW	●	4,0 - 30,0					✔	sk9039zwr4,0-30,0
		■	7,0 - 9,0					-	sk9039zwv7,0-9,0
			10,0 - 20,0					-	sk9039zwv10,0-20,0
		⬢	7,0 - 9,0					-	sk9039zws7,0-9,0
			10,0 - 24,0					-	sk9039zws10,0-24,0
	Hydraulic changing fixture							✔	10014567
	Pneumatic pressure converter							-	10014711
	Assembling aid							-	10006690
Conven-tional	Collet	●	6,0 - 28,0	46	60,4	M40 x 1,5 - LH	120	-	9039er6,0-28,0
		■	7,0 - 9,0					-	9039ev7,0-9,0
			10,0 - 18,0					-	9039ev10,0-18,0
		⬢	7,0 - 9,0					-	9039es7,0-9,0
			10,0 - 25,0					-	9039es10,0-25,0

Feed tube

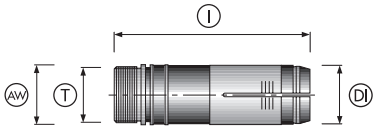



Product variants	Product	Profile	Clamping Ø [mm] BU	Outer Ø [mm] AW	Head Ø [mm] DI	Connecting thread outside T	Total length [mm] l	In stock	Material no.
RS system	Outer sleeve – feeder design			35	33	M33 x 1,5	118	-	10006270
	Inner collet steel	●	4,0 - 25,0					✔	rs25/st/r4,0-25,0
		■	7,0 - 9,0					-	rs25/st/v7,0-9,0
			10,0 - 17,0					-	rs25/st/v10,0-17,0
		⬢	6,0 - 9,0					-	rs25/st/s6,0-9,0
			10,0 - 22,0					-	rs25/st/s10,0-22,0
	Inner collet steel brass	●	4,0 - 25,0					-	rs25/sb/r4,0-25,0
		■	7,0 - 9,0					-	rs25/sb/v7,0-9,0
			10,0 - 17,0					-	rs25/sb/v10,0-17,0
		⬢	6,0 - 9,0					-	rs25/sb/s6,0-9,0
			10,0 - 22,0					-	rs25/sb/s10,0-22,0

Product variants	Product	Profile	Clamping Ø [mm] BU	Outer Ø [mm] AW	Head Ø [mm] DI	Connecting thread outside T	Total length [mm] I	In stock	Material no.
RS system	Inner collet SPH	●	4,0 - 25,0					-	rs25/sph/r4,0-25,0
		■	7,0 - 9,0					-	rs25/sph/v7,0-9,0
			10,0 - 17,0					-	rs25/sph/v10,0-17,0
		⬢	6,0 - 9,0					-	rs25/sph/s6,0-9,0
			10,0 - 22,0					-	rs25/sph/s10,0-22,0
	Inner collet KSB	●	7,0 - 23,5					-	rs25/ksb/r7,0-23,5
		■	7,0 - 9,0					-	rs25/ksb/v7,0-9,0
			10,0 - 17,0					-	rs25/ksb/v10,0-17,0
		⬢	7,0 - 9,0					-	rs25/ksb/s7,0-9,0
			10,0 - 21,0					-	rs25/ksb/s10,0-21,0
	Inner collet OXK	●	5,0 - 20,0					-	rs25/oxk/r5,0-20,0
			20,1 - 24,0					-	rs25/oxk/r20,1-24,0
	Wrench							✔	10008168
Conventional	Feedfinger	●	6,0 - 28,0	35	33	M33 x 1,5	118	-	9282er6,0-28,0
		■	7,0 - 9,0					-	9282ev7,0-9,0
			10,0 - 18,0					-	9282ev10,0-18,0
		⬢	7,0 - 9,0					-	9282es7,0-9,0
			10,0 - 22,0					-	9282es10,0-22,0

SPH = special cast coating; KSB = plastic coating; OXK = oxidized ceramic coating

Synchron spindle

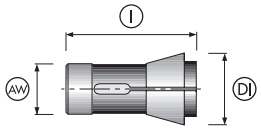

Product	Profile	Clamping Ø [mm] BU	Outer Ø [mm] AW	Head Ø [mm] DI	Total length [mm] I	In stock	Material no.
Pick-off collet	●	4,0 - 26,0	25	35,4	65	✔	9039e/syr4,0-26,0
	■	7,0 - 9,0				-	9039e/syv7,0-9,0
		10,0 - 14,0				-	9039e/syv10,0-14,0
	⬢	7,0 - 9,0				-	9039e/sys7,0-9,0
		10,0 - 17,0				-	9039e/sys10,0-17,0
Pick-off collet small model	●	4,0 - 21,0	25	31	54	-	14305h/syr4,0-21,0
	■	7,0 - 9,0				-	14305h/syv7,0-9,0
		10,0 - 14,0				-	14305h/syv10,0-14,0
	⬢	7,0 - 9,0				-	14305h/sys7,0-9,0
		10,0 - 17,0				-	14305h/sys10,0-17,0

INDEX MS 25. Retrofit

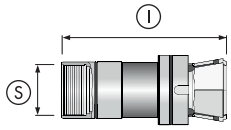



Product variants	Product	Profile	Clamping Ø [mm] BU	Connecting thread outside T	Total length [mm] l	In stock	Material no.
TOPlus	TOPlus unit for M31825				51,5	-	10001048
	TOPlus unit for M31823					-	10001049
	Basic body			M40 x 1,5	126	-	10000190
	Clamping head SE	●	4,0 - 32,0			-	top32zwr4,0-32,0
		■	7,0 - 21,0			-	top32zwv7,0-21,0
		⬢	7,0 - 26,0			-	top32zws7,0-26,0
	Assembling aid					-	10000180
	Manual changing fixture					✔	10006996

INDEX MS 32 6.3. Main spindle

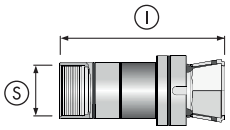


Product variants	Product	Profile	Clamping Ø [mm] BU	Outer Ø [mm] AW	Connecting thread outside T	Total length [mm] l	In stock	Material no.
TOPlus	Basic body			45	M40 x 1	150,5	✔	10018075
	Clamping head SE	●	4,0 - 32,0				✔	top32r4,0-32,0
		■	7,0 - 10,0				-	top32v7,0-10,0
			11,0 - 22,0				-	top32v11,0-22,0
		⬢	7,0 - 10,0				-	top32s7,0-10,0
			11,0 - 26,0				-	top32s11,0-26,0
	Assembling aid						✔	10017623
	Manual changing fixture						✔	10006985

Sub spindle

Product variants	Product	Profile	Clamping Ø [mm] BU	Outer Ø [mm] AW	Connecting thread outside T	Total length [mm] l	In stock	Material no.
TOPlus	Basic body			45	M40 x 1	150,5	✔	10018075
	Clamping head SE	●	4,0 - 32,0				✔	top32r4,0-32,0

INDEX MS 32 6.2. Main spindle

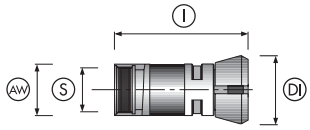




Product variants	Product	Profile	Clamping Ø [mm] BU	Outer Ø [mm] AW	Head Ø [mm] DI	Connecting thread inside S	Total length [mm] l	In stock	Material no.
SPANNTOP ZW	Basic body ZW			46	61	M42 x 1 - LH	109,5	✔	10009430
	Clamping head ZW	●	5,0 - 32,0					✔	sk32zwr5,0-32,0
		■	7,0 - 9,0					-	sk32zwv7,0-9,0
			10,0 - 22,0					-	sk32zwv10,0-22,0
		⬢	7,0 - 9,0					✔	sk32zws7,0-9,0
			10,0 - 27,0					✔	sk32zws10,0-27,0
	Pneumatic changing fixture							✔	10007095
	Assembling aid							✔	10015551
	Manual changing fixture							✔	10006996
	Deadlength chuck for synchron spindle							✔	10001719

INDEX MS 40. Main spindle

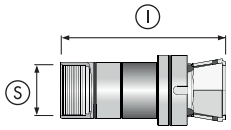



Product variants	Product	Profile	Clamping range [mm]	Connecting thread inside S	Total length [mm] l	In stock	Material no.
TOPlus	Basic body			M48 x 1	122	✔	10000188
	Clamping head SE	●	4 - 7		47	✔	top40r4,0-7,0
			8			✔	top40r8,0
			9 - 10			✔	top40r9,0-10,0
			11 - 40			✔	top40r11,0-40,0
		■	7			-	top40v7,0
			8 - 10			-	top40v8,0-10,0
			11 - 27			-	top40v11,0-27,0
		⬢	7			-	top40s7,0
			8 - 10			-	top40s8,0-10,0
			11 - 32			-	top40s11,0-32,0
	Manual changing fixture					✔	10007003
	Assembling aid					✔	10000178
	Deadlength chuck for synchron spindle					✔	10000177

INDEX MS 52. Main spindle

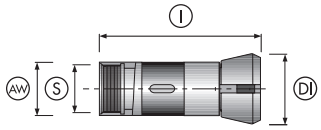



Product variants	Product	Profile	Clamping range [mm]	Outer Ø [mm] AW	Head Ø [mm] DI	Connecting thread inside S	Total length [mm] l	In stock	Material no.
SPANNTOP BZI	Basic body BZI			69	99,5	M62 x 1,5	53	✔	10001391
	Clamping head RD	●	4,0 - 7,5				58	✔	sk65bzir4,0-7,5
			8					✔	sk65bzir8,0
			8,5 - 10,5					✔	sk65bzir8,5-10,5
			11 - 65					✔	sk65bzir11,0-65,0
		■	8 - 10					✔	sk65bziv8,0-10,0
			11 - 45					✔	sk65bziv11,0-45,0
		⬢	7					✔	sk65bzis7,0
			8 - 10					✔	sk65bzis8,0-10,0
			11 - 55					✔	sk65bzis11,0-55,0
	Manual changing fixture							✔	10019112

Schütte SG 18 / AG 20 to Ø 20. Main spindle

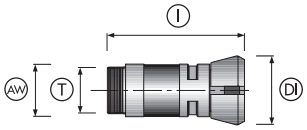



Product variants	Product	Profile	Clamping Ø [mm] BU	Outer Ø [mm] AW	Head Ø [mm] DI	Connecting thread outside T	Total length [mm] l	In stock	Material no.
SPANNTOP ZW	Basic body H-ZW			32	41,8	M28 x 1 - LH	84	✔	10009435
	Clamping head H-ZW	●	4,0 - 18,0					✔	sk90071h-zwr4,0-18,0
		■	7,0 - 9,0					-	sk90071h-zwv7,0-9,0
			10,0 - 13,0					-	sk90071h-zwv10,0-13,0
		⬢	7,0 - 9,0					-	sk90071h-zws7,0-9,0
			10,0 - 15,0					-	sk90071h-zws10,0-15,0
	Assembling aid							✔	10006698
	Manual changing fixture							✔	10007001
Conven-tional	Collet	●	5,0 - 20,0	32	41,8	M28 x 1 - LH	84	✔	90076hr5,0-20,0
		■	7,0 - 9,0					-	90076hv7,0-9,0
			10,0 - 12,0					-	90076hv10,0-12,0
		⬢	7,0 - 9,0					-	90076hs7,0-9,0
			10,0 - 15,0					-	90076hs10,0-15,0
		●	4,0 - 20,0		41,5	M29 x 1 - LH [conical]		-	90078hr4,0-20,0
		■	7,0 - 9,0					-	90078hv7,0-9,0
			10,0 - 14,0					-	90078hv10,0-14,0
		⬢	7,0 - 9,0					-	90078hs7,0-9,0
			10,0 - 17,0					-	90078hs10,0-17,0

Feed tube

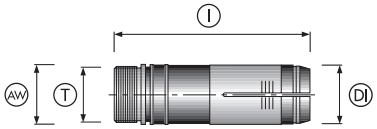



Product variants	Product	Profile	Clamping Ø [mm] BU	Outer Ø [mm] AW	Head Ø [mm] DI	Connecting thread outside T	Total length [mm] l	In stock	Material no.
RS system	Outer sleeve			23	25	M23 x 1	88	✔	10006193
	Inner collet steel	●	2,5 - 16,0					✔	rs16/st/r2,5-16,0
		■	4,0 - 9,0					-	rs16/st/v4,0-9,0
			10,0 - 11,0					-	rs16/st/v10,0-11,0
		⬢	4,0 - 9,0					-	rs16/st/s4,0-9,0
			10,0 - 13,0					-	rs16/st/s10,0-13,0

Product variants	Product	Profile	Clamping Ø [mm] BU	Outer Ø [mm] AW	Head Ø [mm] DI	Connecting thread outside T	Total length [mm] l	In stock	Material no.
RS system	Inner collet steel brass	●	2,5 - 16,0					-	rs16/sb/r2,5-16,0
		■	4,0 - 9,0					-	rs16/sb/v4,0-9,0
			10,0 - 11,0					-	rs16/sb/v10,0-11,0
		⬢	4,0 - 9,0					-	rs16/sb/s4,0-9,0
			10,0 - 13,0					-	rs16/sb/s10,0-13,0
	Inner collet SPH	●	2,5 - 16,0					-	rs16/sph/r2,5-16,0
		■	4,0 - 9,0					-	rs16/sph/v4,0-9,0
			10,0 - 11,0					-	rs16/sph/v10,0-11,0
		⬢	4,0 - 9,0					-	rs16/sph/s4,0-9,0
			10,0 - 13,0					-	rs16/sph/s10,0-13,0
	Inner collet KSB	●	5,0 - 14,0					-	rs16/ksb/r5,0-14,0
		■	5,0 - 9,0					-	rs16/ksb/v5,0-9,0
			10,0					-	rs16/ksb/v10,0
		⬢	5,0 - 9,0					-	rs16/ksb/s5,0-9,0
			10,0 - 13,0					-	rs16/ksb/s10,0-13,0
	Inner collet OXK	●	3,1 - 14,5					-	rs16/oxk/r3,1-14,5
	Wrench							✔	10008165
Conventional	Feedfinger	●	4,0 - 18,0	23	25	M23 x 1	88	-	9255er4,0-18,0
		■	7,0 - 9,0					-	9255ev7,0-9,0
			10,0 - 12,0					-	9255ev10,0-12,0
		⬢	7,0 - 9,0					-	9255es7,0-9,0
			10,0 - 15,0					-	9255es10,0-15,0
		●	4,0 - 20,0	25,4		M24 x 1 [conical]		-	92554hr4,0-20,0
		■	7,0 - 9,0					-	92554hv7,0-9,0
			10,0 - 14,0					-	92554hv10,0-14,0
		⬢	7,0 - 9,0					-	92554hs7,0-9,0
			10,0 - 17,0					-	92554hs10,0-17,0
	Guide ring for feed tube	●	4,0 - 20,0					-	9262e/f-sfr4,0-20,0
		■	7,0 - 9,0					-	9262e/f-sfv7,0-9,0
			10,0 - 14,0					-	9262e/f-sfv10,0-14,0
		⬢	7,0 - 9,0					-	9262e/f-sfs7,0-9,0
			10,0 - 17,0					-	9262e/f-sfs10,0-17,0

SPH = special cast coating; KSB = plastic coating; OXK = oxidized ceramic coating

Sub spindle

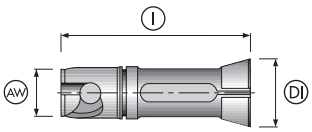

Product	Description	Profile	Clamping Ø [mm] BU	Outer Ø [mm] AW	Head Ø [mm] DI	Total length [mm] l	In stock	Material no.
Pick-off collet	Triple slotted	●	4,0- 20,0	25	32,1	91,5	✔	35161h/gr4,0-20,0
		■	7,0 - 9,0				-	35161h/gv7,0-9,0
			10,0 - 14,0				-	35161h/gv10,0-14,0
		⬢	7,0 - 9,0				-	35161h/gs7,0-9,0
			10,0 - 17,0				-	35161h/gs10,0-17,0

Schütte SF 25 / SE 26 / AF 26 / SF 26 / SF 26S / SC 26 / SCX 26. Main spindle

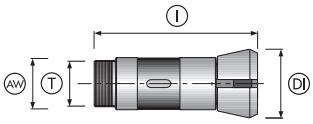

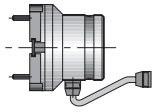



Product variants	Product	Profile	Clamping Ø [mm] BU	Outer Ø [mm] AW	Head Ø [mm] DI	Connecting thread outside T	Total length [mm] I	In stock	Material no.
SPANNTOP BZ	Basic body BZ			46	60,4	M40 x 1,5 - LH	120	✔	10009449
	Clamping head BZ	●	5,0 - 26,0					✔	sk9039bzr5,0-26,0
		■	7,0 - 9,0					-	sk9039bzv7,0-9,0
			10,0 - 18,0					-	sk9039bzv10,0-18,0
		⬢	7,0 - 9,0					-	sk9039bzs7,0-9,0
			10,0 - 22,0					-	sk9039bzs10,0-22,0
	Hydraulic changing fixture							-	10014562
	Pneumatic pressure converter							-	10014711
	Assembling aid							-	10006703
	Manual changing fixture							-	10006994
Conventional	Collet	●	6,0 - 28,0	46	60,4	M40 x 1,5 - LH	120	-	9039er6,0-28,0
		■	7,0 - 9,0					-	9039ev7,0-9,0
			10,0 - 18,0					-	9039ev10,0-18,0
		⬢	7,0 - 9,0					-	9039es7,0-9,0
			10,0 - 25,0					-	9039es10,0-25,0

Feed tube

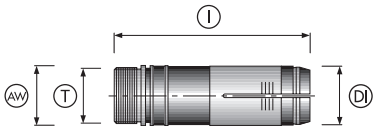



Product variants	Product	Profile	Clamping Ø [mm] BU	Outer Ø [mm] AW	Head Ø [mm] DI	Connecting thread outside T	Total length [mm] I	In stock	Material no.
RS system	Outer sleeve			35	33	M33 x 1,5	118	✔	10006307
				37,5			106	✔	10000192
	Inner collet steel	●	4,0 - 25,0					✔	rs25/st/r4,0-25,0
		■	7,0 - 9,0					-	rs25/st/v7,0-9,0
			10,0 - 17,0					-	rs25/st/v10,0-17,0
		⬢	6,0 - 9,0					-	rs25/st/s6,0-9,0
			10,0 - 22,0					-	rs25/st/s10,0-22,0
	Inner collet steel brass	●	4,0 - 25,0					-	rs25/sb/r4,0-25,0
		■	7,0 - 9,0					-	rs25/sb/v7,0-9,0
			10,0 - 17,0					-	rs25/sb/v10,0-17,0
		⬢	6,0 - 9,0					-	rs25/sb/s6,0-9,0
			10,0 - 22,0					-	rs25/sb/s10,0-22,0
	Inner collet SPH	●	4,0 - 25,0					-	rs25/sph/r4,0-25,0
		■	7,0 - 9,0					-	rs25/sph/v7,0-9,0
			10,0 - 17,0					-	rs25/sph/v10,0-17,0
		⬢	6,0 - 9,0					-	rs25/sph/s6,0-9,0
			10,0 - 22,0					-	rs25/sph/s10,0-22,0
	Inner collet KSB	●	7,0 - 23,5					-	rs25/ksb/r7,0-23,5
		■	7,0 - 9,0					-	rs25/ksb/v7,0-9,0
			10,0 - 17,0					-	rs25/ksb/v10,0-17,0
		⬢	7,0 - 9,0					-	rs25/ksb/s7,0-9,0
			10,0 - 21,0					-	rs25/ksb/s10,0-21,0
	Inner collet OXK	●	5,0 - 20,0					-	rs25/oxk/r5,0-20,0
			20,1 - 24,0					-	rs25/oxk/r20,1-24,0
	Wrench							✔	10008168
Conventional	Feedfinger	●	6,0 - 28,0	35	33	M33 x 1,5	118	-	9282er6,0-28,0
		■	7,0 - 9,0					-	9282ev7,0-9,0
			10,0 - 18,0					-	9282ev10,0-18,0
		⬢	7,0 - 9,0					-	9282es7,0-9,0
			10,0 - 22,0					-	9282es10,0-22,0
	Guide ring for feed tube	●	4,0 - 25,0					✔	9282e/f-sdr4,0-25,0
		■	7,0 - 9,0					-	9282e/f-sdv7,0-9,0
			10,0 - 17,0					-	9282e/f-sdv10,0-17,0
		⬢	7,0 - 9,0					-	9282e/f-sds7,0-9,0
			10,0 - 21,0					-	9282e/f-sds10,0-21,0
		●	4,0 - 26,0					-	9282e/f-ser4,0-26,0
		■	7,0 - 9,0					-	9282e/f-sev7,0-9,0
			10,0 - 18,0					-	9282e/f-sev10,0-18,0
		⬢	7,0 - 9,0					-	9282e/f-ses7,0-9,0
			10,0 - 22,0					-	9282e/f-ses10,0-22,0
		●	4,0 - 28,0					✔	9319e/f-sfr4,0-28,0
		■	7,0 - 9,0					-	9319e/f-sfv7,0-9,0
			10,0 - 22,0					-	9319e/f-sfv10,0-22,0
		⬢	7,0 - 9,0					-	9319e/f-sfs7,0-9,0
			10,0 - 27,0					-	9319e/f-sfs10,0-27,0

SPH = special cast coating; KSB = plastic coating; OXK = oxidized ceramic coating

Sub spindle

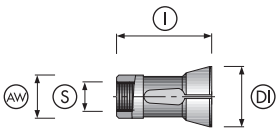

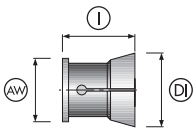

Product	Description	Profile	Clamping Ø [mm] BU	Outer Ø [mm] AW	Head Ø [mm] DI	Connecting thread inside S	Total length [mm] l	In stock	Material no.
Pick-off collet	Sextuple slotted	●	6,0 - 25,0	34	42		53	✔	9039e/g-sfr6,0-25,0
		■	7,0 - 9,0					-	9039e/g-sfv7,0-9,0
			10,0 -17,0					-	9039e/g-sfv10,0-17,0
		⬢	7,0 - 9,0					-	9039e/g-sfs7,0-9,0
			10,0 - 21,0					-	9039e/g-sfs10,0-21,0
		●	5,0 - 21,0	28	37	M24 x 1,5 - LH	50	✔	9016e/gr5,0-21,0
		■	7,0 - 9,0					-	9016e/gv7,0-9,0
			10,0 - 14,0					-	9016e/gv10,0-14,0
		⬢	7,0 - 9,0					-	9016e/gs7,0-9,0
			10,0 - 14,0					-	9016e/gs10,0-14,0
		●	4,0 - 40,0	52	60,6		60	✔	9070e/g-sfr4,0-40,0
		■	7,0 - 9,0					-	9070e/g-sfv7,0-9,0
			10,0 - 28,0					-	9070e/g-sfv10,0-28,0
		⬢	7,0 - 9,0					-	9070e/g-sfs7,0-9,0
			10,0 - 34,0					-	9070e/g-sfs10,0-34,0

Schütte SC7-26 / SC7-32. Sub spindle

Product	Suitable for	Size	Product	Profile	Clamping Ø [mm]	Type of serration	Total length [mm]	In stock	Material no.
SPANNTOP pull-back	Chuck A030123.0008C and A030573.0003C	28	Clamping head	●	4,0 - 26,0	Smooth	31,5	-	A030126.0005A
			Manual changing fixture					-	10006985
	Chuck A019659.0003C	32	Clamping head	●	4,0 - 32,0	Smooth	33	-	A030633.0001A
			Manual changing fixture					-	10017417
SPANNTOP deadlength	Chuck A035510.0008C	32	Clamping head	●	4,0 - 32,0	Smooth	33	-	A030633.0001A
			Manual changing fixture						10017417

Schütte SC9-26 / SC9-32. Sub spindle

Product	Suitable for	Size	Product	Profile	Clamping Ø [mm]	Type of serration	Total length [mm]	In stock	Material no.
SPANNTOP pull-back	Chuck 2612/0014	28	Clamping head	●	4,0 - 26,0	Smooth	31,5	-	A030126.0005A
			Manual changing fixture					-	10006985
	Chuck 2612/0013	32	Clamping head	●	4,0 - 32,0	Smooth	33	-	A030633.0001A
			Manual changing fixture					-	A015903.0005B
SPANNTOP deadlength	Chuck A053509.0004C	32	Clamping bush	●	4,0 - 32,0	Smooth	30	-	A053515.0006A
			Manual changing fixture						A053526.0003B

SF 32 / SF 32S / AF 32 / AF 32S / S 32PC. Main spindle

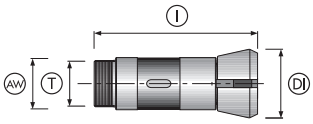

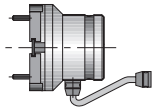



Product variants	Product	Profile	Clamping Ø [mm] BU	Outer Ø [mm] AW	Head Ø [mm] DI	Connecting thread outside T	Total length [mm] I	In stock	Material no.
SPANNTOP BZ	Basic body BZ			53	69,7	M47 x 1,5 - LH	136	✔	10009455
	Clamping head BZ	●	6,0 - 32,0					✔	sk6970bzr6,0-32,0
		■	7,0 - 9,0					-	sk6970bzv7,0-9,0
			10,0 - 22,0					-	sk6970bzv10,0-22,0
		⬢	7,0 - 9,0					-	sk6970bzs7,0-9,0
			10,0 - 27,0					-	sk6970bzs10,0-27,0
	Hydraulic changing fixture							✔	10014563
	Pneumatic pressure converter							-	10014711
	Assembling aid							✔	10006707
	Manual changing fixture							✔	10006995
Conventional	Collet	●	4,0 - 32,0	53	69,7	M47 x 1,5 - LH	136	✔	9070er4,0-32,0
		■	7,0 - 9,0					-	9070ev7,0-9,0
			10,0 - 22,0					-	9070ev10,0-22,0
		⬢	7,0 - 9,0					-	9070es7,0-9,0
			10,0 - 27,0					-	9070es10,0-27,0

Feed tube

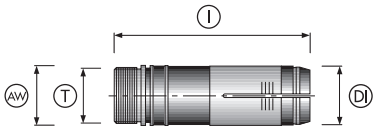



Product variants	Product	Profile	Clamping Ø [mm] BU	Outer Ø [mm] AW	Head Ø [mm] DI	Connecting thread outside T	Total length [mm] I	In stock	Material no.
RS system	Outer sleeve			40	42	M38 x 1,5	130	✔	10006396
	Inner collet steel	●	4,0 - 32,0					✔	rs32/st/r4,0-32,0
		■	7,0 - 9,0					-	rs32/st/v7,0-9,0
			10,0 -21,0					-	rs32/st/v10,0-21,0
		⬢	7,0 - 9,0					-	rs32/st/s7,0-9,0
			10,0 - 27,0					-	rs32/st/s10,0-27,0
	Inner collet steel brass	●	4,0 - 32,0					-	rs32/sb/r4,0-32,0
		■	7,0 - 9,0					-	rs32/sb/v7,0-9,0
			10,0 - 22,0					-	rs32/sb/v10,0-22,0
		⬢	7,0 - 9,0					-	rs32/sb/s7,0-9,0
			10,0 - 27,0					-	rs32/sb/s10,0-27,0

Product variants	Product	Profile	Clamping Ø [mm] BU	Outer Ø [mm] AW	Head Ø [mm] DI	Connecting thread outside T	Total length [mm] I	In stock	Material no.
RS system	Inner collet SPH	●	4,0 - 32,0					-	rs32/sph/r4,0-32,0
		■	7,0 - 9,0					-	rs32/sph/v7,0-9,0
			10,0 - 22,0					-	rs32/sph/v10,0-22,0
		⬢	7,0 - 9,0					-	rs32/sph/s7,0-9,0
			10,0 - 27,0					-	rs32/sph/s10,0-27,0
	Inner collet KSB	●	4,0 - 29,5					-	rs32/ksb/r4,0-29,5
		■	8,0 - 9,0					-	rs32/ksb/v8,0-9,0
			10,0 - 22,0					-	rs32/ksb/v10,0-22,0
		⬢	8,0 - 9,0					-	rs32/ksb/s8,0-9,0
			10,0 - 27,0					-	rs32/ksb/s10,0-27,0
	Inner collet OXK	●	6,0 - 20,0					-	rs32/oxk/r6,0-20,0
			20,1 - 26,5					-	rs32/oxk/r20,1-26,5
	Wrench							✔	10008171
Conventional	Feedfinger	●	4,0 - 32,0	40	42	M38 x 1,5	130	-	9319er4,0-32,0
		■	7,0 - 9,0					-	9319ev7,0-9,0
			10,0 - 22,0					-	9319ev10,0-22,0
		⬢	7,0 - 9,0					-	9319es7,0-9,0
			10,0 - 27,0					-	9319es10,0-27,0
	Guide ring for feed tube	●	4,0 - 32,0					✔	9319e/f-sdr4,0-32,0
		■	7,0 - 9,0					-	9319e/f-sdv7,0-9,0
			10,0 - 22,0					-	9319e/f-sdv10,0-22,0
		⬢	7,0 - 9,0					-	9319e/f-sds7,0-9,0
			10,0 - 27,0					-	9319e/f-sds10,0-27,0
		●	4,0 - 28,0					✔	9319e/f-sfr4,0-28,0
		■	7,0 - 9,0					-	9319e/f-sfv7,0-9,0
			10,0 - 22,0					-	9319e/f-sfv10,0-22,0
		⬢	7,0 - 9,0					-	9319e/f-sfs7,0-9,0
			10,0 - 27,0					-	9319e/f-sfs10,0-27,0

SPH = special cast coating; KSB = plastic coating; OXK = oxidized ceramic coating

Sub spindle

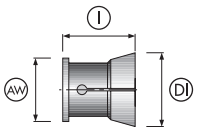

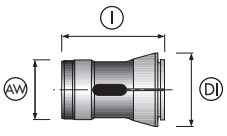

Product	Description	Profile	Clamping Ø [mm] BU	Outer Ø [mm] AW	Head Ø [mm] DI	Total length [mm] I	In stock	Material no.
Pick-off collet	Sextuple slotted	●	4,0 - 40,0	52	60,6	60	✔	9070e/g-sfr4,0-40,0
		■	7,0 - 9,0				-	9070e/g-sfv7,0-9,0
			10,0 - 28,0				-	9070e/g-sfv10,0-28,0
		⬢	7,0 - 9,0				-	9070e/g-sfs7,0-9,0
			10,0 - 34,0				-	9070e/g-sfs10,0-34,0
		●	4,0 - 32,0	44	54	76	✔	907034h/gr4,0-32,0
		■	7,0 - 9,0				-	907034h/gv7,0-9,0
			10,0 - 22,0				-	907034h/gv10,0-22,0
		⬢	7,0 - 9,0				-	907034h/gs7,0-9,0
			10,0 - 27,0				-	907034h/gs10,0-27,0

Schütte S / A 36PC. Main spindle

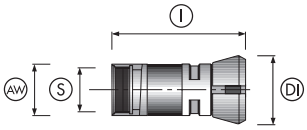

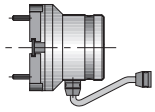



Product variants	Product	Profile	Clamping Ø [mm] BU	Outer Ø [mm] AW	Head Ø [mm] DI	Connecting thread inside S	Total length [mm] I	In stock	Material no.
SPANNTOP ZW	Basic body ZW			56	72,2	M52 x 1,5 - LH	139	✔	10001393
	Clamping head ZW	●	4,0 - 36,0					-	sb.k.0096r4,0-36,0
		■	7,0 - 9,0					-	sb.k.0096v7,0-9,0
			10,0 - 25,0					-	sb.k.0096v10,0-25,0
		⬢	7,0 - 9,0					-	sb.k.0096s7,0-9,0
			10,0 - 31,0					-	sb.k.0096s10,0-31,0
	Hydraulic changing fixture							✔	10014567
	Pneumatic pressure converter							-	10014711
	Assembling aid							-	ew.0115.0001.00
	Manual changing fixture							✔	10006999
Conventional	Collet	●	4,0 - 36,0	56	72,2	M52 x 1,5 - LH	139	-	se.f.0020r4,0-36,0
		■	7,0 - 9,0					-	se.f.0020v7,0-9,0
			10,0 - 25,0					-	se.f.0020v10,0-25,0
		⬢	7,0 - 9,0					-	se.f.0020s7,0-9,0
			10,0 - 31,0					-	se.f.0020s10,0-31,0

Feed tube

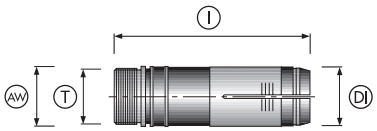



Product variants	Product	Profile	Clamping Ø [mm] BU	Outer Ø [mm] AW	Head Ø [mm] DI	Connecting thread outside T	Total length [mm] I	In stock	Material no.
RS system	Outer sleeve			45	43,8	M42 x 1,5 - LH	136	✔	10001397
	Inner collet steel	●	6,0 - 34,0					✔	rs36/st/r6,0-34,0
		■	8,0 - 9,0					-	rs36/st/v8,0-9,0
			10,0 - 29,0					-	rs36/st/v10,0-29,0
		⬢	8,0 - 9,0					-	rs36/st/s8,0-9,0
			10,0 - 27,0					-	rs36/st/s10,0-27,0
	Inner collet steel brass	●	6,0 - 34,0					-	rs36/sb/r6,0-34,0
		■	8,0 - 9,9					-	rs36/sb/v8,0-9,9
			10,0 - 24,0					-	rs36/sb/v10,0-24,0
		⬢	8,0 - 9,9					-	rs36/sb/s8,0-9,9
			10,0 - 29,0					-	rs36/sb/s10,0-29,0

Product variants	Product	Profile	Clamping Ø [mm] BU	Outer Ø [mm] AW	Head Ø [mm] DI	Connecting thread outside T	Total length [mm] I	In stock	Material no.
RS system	Inner collet SPH	●	6,0 - 32,0					-	rs36/sph/r6,0-32,0
		■	8,0 - 9,0					-	rs36/sph/v8,0-9,0
			10,0 - 22,0					-	rs36/sph/v10,0-22,0
		⬢	8,0 - 9,0					-	rs36/sph/s8,0-9,0
			10,0 - 27,0					-	rs36/sph/s10,0-27,0
	Inner collet KSB	●	6,0 - 32,0					-	rs36/ksb/r6,0-32,0
		■	8,0 - 9,0					-	rs36/ksb/v8,0-9,0
			10,0 - 22,0					-	rs36/ksb/v10,0-22,0
		⬢	8,0 - 9,0					-	rs36/ksb/s8,0-9,0
			10,0 - 27,0					-	rs36/ksb/s10,0-27,0
	Inner collet OXK	●	6,0 - 20,0					-	rs36/oxk/r6,0-20,0
			20,1-26,5					-	rs36/oxk/r20,1-26,5
			26,6 - 35,0					-	rs36/oxk/r26,6-35,0
	Wrench							✔	10008174
Conven-tional	Feedfinger	●	4,0 - 36,0	45	43,8	M42 x 1,5 - LH	136	-	se.v.0009r4,0-36,0
		■	7,0 - 9,0					-	se.v.0009v7,0-9,0
			10,0 - 25,0					-	se.v.0009v10,0-25,0
		⬢	7,0 - 9,0					-	se.v.0009s7,0-9,0
			10,0 - 31,0					-	se.v.0009s10,0-31,0
	Guide ring for feed tube	●	4,0 - 36,0					-	fs.1105.0005.00r4,0-36,0
		■	7,0 - 9,0					-	fs.1105.0005.00v7,0-9,0
			10,0 - 25,0					-	fs.1105.0005.00v10,0-25,0
		⬢	7,0 - 9,0					-	fs.1105.0005.00s7,0-9,0
			10,0 - 31,0					-	fs.1105.0005.00s10,0-31,0

SPH = special cast coating; KSB = plastic coating; OXK = oxidized ceramic coating

Sub spindle

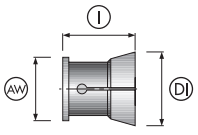

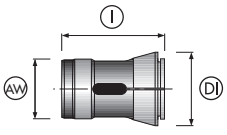

Product	Description	Profile	Clamping Ø [mm] BU	Outer Ø [mm] AW	Head Ø [mm] DI	Total length [mm] I	In stock	Material no.
Pick-off collet	Sextuple slotted	●	4,0 - 32,0	44	54	76	✔	907034h/gr4,0-32,0
		■	7,0 - 9,0				-	907034h/gv7,0-9,0
			10,0 - 22,0				-	907034h/gv10,0-22,0
		⬢	7,0 - 9,0				-	907034h/gs7,0-9,0
			10,0 - 27,0				-	907034h/gs10,0-27,0

AD 40 / AF 42 / SF 42 / SF 40. Main spindle

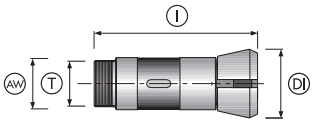

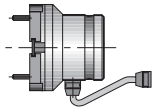



Product variants	Product	Profile	Clamping Ø [mm] BU	Outer Ø [mm] AW	Head Ø [mm] DI	Connecting thread outside T	Total length [mm] I	In stock	Material no.
SPANNTOP BZ	Basic body BZ			62,9	78,8	M56 x 1,5 - LH	157	-	10009461
	Clamping head BZ	●	5,0 - 42,0					-	sk9112bzr5,0-42,0
		■	7,0 - 9,0					-	sk9112bzv7,0-9,0
			10,0 - 30,0					-	sk9112bzv10,0-30,0
		⬢	7,0 - 9,0					-	sk9112bzs7,0-9,0
			10,0 - 36,0					-	sk9112bzs10,0-36,0
	Hydraulic changing fixture							-	10014564
	Pneumatic pressure converter							-	10014711
	Assembling aid							✔	10006710
	Manual changing fixture							✔	10006997
Conventional	Collet only with radial grooves	●	4,0 - 42,0	62,9	78,8	M56 x 1,5 - LH	157	-	9112er4,0-42,0
		■	7,0 - 9,0					-	9112ev7,0-9,0
			10,0 - 29,0					-	9112ev10,0-29,0
		⬢	7,0 - 9,0					-	9112es7,0-9,0
			10,0 - 35,0					-	9112es10,0-35,0

Feed tube

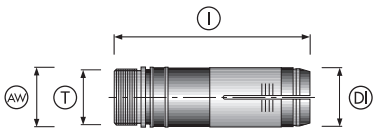



Product variants	Product	Profile	Clamping Ø [mm] BU	Outer Ø [mm] AW	Head Ø [mm] DI	Connecting thread outside T	Total length [mm] I	In stock	Material no.
RS system	Outer sleeve			51	49	M48 x 1,5	140	✔	10006432
	Inner collet steel	●	6,0 - 40,0					✔	rs40/st/r6,0-40,0
		■	10,0 - 28,0					-	rs40/st/v10,0-28,0
		⬢	7,0 - 9,0					-	rs40/st/s7,0-9,0
			10,0 - 34,0					-	rs40/st/s10,0-34,0
	Inner collet steel brass	●	6,0 - 40,0					-	rs40/sb/r6,0-40,0
		■	10,0 - 28,0					-	rs40/sb/v10,0-28,0
		⬢	7,0 - 9,0					-	rs40/sb/s7,0-9,0
			10,0 - 34,0					-	rs40/sb/s10,0-34,0

Product variants	Product	Profile	Clamping Ø [mm] BU	Outer Ø [mm] AW	Head Ø [mm] DI	Connecting thread outside T	Total length [mm] l	In stock	Material no.
RS system	Inner collet SPH	●	6,0 - 40,0					-	rs40/sph/r6,0-40,0
		■	10,0 - 28,0					-	rs40/sph/v10,0-28,0
		⬢	7,0 - 9,0					-	rs40/sph/s7,0-9,0
			10,0 - 34,0					-	rs40/sph/s10,0-34,0
	Inner collet KSB	●	10,0 - 38,5					-	rs40/ksb/r10,0-38,5
		■	10,0 - 27,0					-	rs40/ksb/v10,0-27,0
		⬢	7,0 - 9,0					-	rs40/ksb/s7,0-9,0
			10,0 - 34,0					-	rs40/ksb/s10,0-34,0
	Inner collet OXK	●	10,0 - 20,0					-	rs40/oxk/r10,0-20,0
			20,1 - 38,0					-	rs40/oxk/r20,1-38,0
	Wrench							✔	10008175
Conventional	Feedfinger	●	4,0 - 42,0	51	49	M48 x 1,5	152	-	9372er4,0-42,0
		■	7,0 - 9,0					-	9372ev7,0-9,0
			10,0 - 29,0					-	9372ev10,0-29,0
		⬢	7,0 - 9,0					-	9372es7,0-9,0
			10,0 - 35,0					-	9372es10,0-35,0
	Guide ring for feed tube	●	10,0 - 42,0					-	9372e/f-sfr10,0-42,0
		■	7,0 - 9,0					-	9372e/f-sfv7,0-9,0
			10,0 - 29,0					-	9372e/f-sfv10,0-29,0
		⬢	7,0 - 9,0					-	9372e/f-sfs7,0-9,0
			10,0 - 35,0					-	9372e/f-sfs10,0-35,0
		●	4,0 - 40,0					-	9372e/f-sf-1r4,0-40,0
		■	7,0 - 9,0					-	9372e/f-sf-1v7,0-9,0
			10,0 - 28,0					-	9372e/f-sf-1v10,0-28,0
		⬢	7,0 - 9,0					-	9372e/f-sf-1s7,0-9,0
			10,0 - 34,0					-	9372e/f-sf-1s10,0-34,0

SPH = special cast coating; KSB = plastic coating; OXK = oxidized ceramic coating

Sub spindle

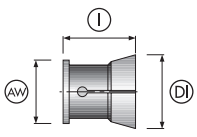

Product	Description	Profile	Clamping Ø [mm] BU	Outer Ø [mm] AW	Head Ø [mm] DI	Total length [mm] l	In stock	Material no.
Pick-off collet	Sextuple slotted	●	4,0 - 40,0	52	60,6	60	✔	9070e/g-sfr4,0-40,0
		■	7,0 - 9,0				-	9070e/g-sfv7,0-9,0
			10,0 - 28,0				-	9070e/g-sfv10,0-28,0
		⬢	7,0 - 9,0				-	9070e/g-sfs7,0-9,0
			10,0 - 34,0				-	9070e/g-sfs10,0-34,0

Schütte SD 50 / SF 51 / AF 51 / SF 51S. Main spindle

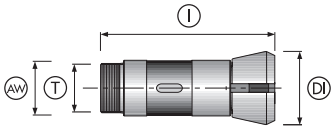

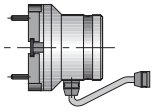
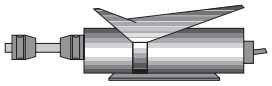

Product variants	Product	Profile	Clamping Ø [mm] BU	Outer Ø [mm] AW	Head Ø [mm] DI	Connecting thread outside T	Total length [mm] I	In stock	Material no.
SPANNTOP BZ	Basic body BZ			75	98,2	M68 x 1,5 - LH	187	✔	10009465
	Clamping head BZ	●	9,0 - 48,0					-	sk9139bzr9,0-48,0
		■	20,0 - 34,0					-	sk9139bzv20,0-34,0
		⬢	14,0 - 41,0					-	sk9139bzs14,0-41,0
	Hydraulic changing fixture							-	wv.022a.0002.00
	Pneumatic pressure converter							-	10014711
	Assembling aid							-	10006712
Conventional	Collet	●	9,0 - 51,0	75	98,2	M68 x 1,5 - LH	187	-	9139er9,0-51,0

Feed tube

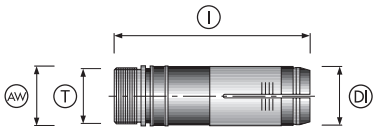



Product variants	Product	Profile	Clamping Ø [mm] BU	Outer Ø [mm] AW	Head Ø [mm] DI	Connecting thread outside T	Total length [mm] I	In stock	Material no.
RS system	Outer sleeve			58	62	M58 x 1,5	178,5	✔	10006443
	Inner collet steel	●	6,0 - 48,0					✔	rs50/st/r6,0-48,0
		■	12,0 - 34,0					-	rs50/st/v12,0-34,0
		⬢	6,0 - 9,0					-	rs50/st/s6,0-9,0
			10,0 - 41,0					-	rs50/st/s10,0-41,0
	Inner collet steel brass	●	6,0 - 48,0					-	rs50/sb/r6,0-48,0
		■	12,0 - 34,0					-	rs50/sb/v12,0-34,0
		⬢	6,0 - 9,0					-	rs50/sb/s6,0-9,0
			10,0 - 41,0					-	rs50/sb/s10,0-41,0
	Inner collet SPH	●	6,0 - 48,0					-	rs50/sph/r6,0-48,0
		■	12,0 - 34,0					-	rs50/sph/v12,0-34,0
		⬢	6,0 - 9,0					-	rs50/sph/s6,0-9,0
			10,0 - 41,0					-	rs50/sph/s10,0-41,0
	Inner collet KSB	●	12,0 - 44,5					-	rs50/ksb/r12,0-44,5
		■	12,0 - 31,0					-	rs50/ksb/v12,0-31,0
		⬢	12,0 - 41,0					-	rs50/ksb/s12,0-41,0
	Inner collet OXK	●	12,0 - 20,0					-	rs50/oxk/r12,0-20,0
			20,1 - 40,0					-	rs50/oxk/r20,1-40,0
			40,1 - 46,0					-	rs50/oxk/r40,1-46,0
	Wrench							✔	10008179

Product variants	Product	Profile	Clamping Ø [mm] BU	Outer Ø [mm] AW	Head Ø [mm] DI	Connecting thread outside T	Total length [mm] l	In stock	Material no.
Conventional	Feedfinger			58	62	M58 x 1,5	178,5	-	9406e
	Guide ring for feed tube	●						-	9406e/f-sd
								-	9406e/f-sf-1
								-	9406e/f-sf
	Support ring for bar guiding system							-	9406e/st-sd
								-	9406e/st-sf

SPH = special cast coating; KSB = plastic coating; OXK = oxidized ceramic coating

Sub spindle

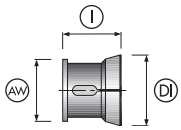

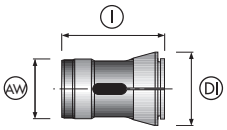

Product	Description	Profile	Clamping Ø [mm] BU	Outer Ø [mm] AW	Head Ø [mm] DI	Total length [mm] l	In stock	Material no.
Pick-off collet	Sextuple slotted	●	15,0 - 19,0	63	71,6	60	-	9139e/g-sfr15,0-19,0
			20,0 - 51,0				✔	9139e/g-sfr20,0-51,0
		■	12,0 - 35,0				-	9139e/g-sfv12,0-35,0
		⬢	12,0 - 42,0				-	9139e/g-sfs12,0-42,0
		●	10,0 - 49,0	59	67	76	✔	91397h/gr10,0-49,0
		■	12,0 - 34,0				-	91397h/gv12,0-34,0
		⬢	12,0 - 41,0				-	91397h/gs12,0-41,0

Schütte S 51 PC. Main spindle

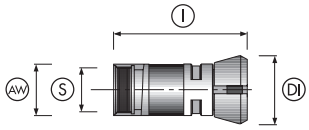

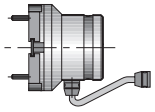

Product variants	Product	Profile	Clamping Ø [mm] BU	Outer Ø [mm] AW	Head Ø [mm] DI	Connecting thread inside S	Total length [mm] l	In stock	Material no.
SPANNTOP ZW	Basic body ZW [Cucci side loader]			75	98,5	M70 x 1,5 - LH	135,5	✔	10001395
						M68 x 1,5 - LH	147,5	-	10016313
	Basic body ZW [rear loader]							-	10016314
	Clamping head ZW							-	sb.k.0098
	Pneumatic changing fixture							-	10007113
	Assembling aid							-	ew.0117.0003.00
Conventional	Collet	●	10,0 - 56,0	75	98,5	M70 x 1,5 - LH	175	-	se.f.0023r10,0-56,0
			12,0 - 39,0					-	se.f.0023v12,0-39,0
		⬢	12,0 - 42,0					-	se.f.0023s12,0-42,0
			43,0 - 47,0					-	se.f.0023s43,0-47,0

Sub spindle

Product	Description	Profile	Clamping Ø [mm]	Outer Ø [mm]	Head Ø [mm]	Total length [mm]	In stock	Material no.
Pick-off collet	Sextuple slotted	●	10,0 - 49,0	59	67	76	✔	91397h/gr10,0-49,0
		■	12,0 - 34,0				-	91397h/gv12,0-34,0
		⬢	12,0 - 41,0				-	91397h/gs12,0-41,0

Tornos Multi Deko 26/6. Main spindle

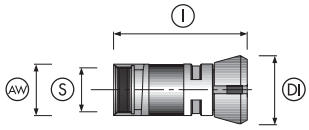

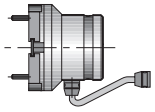

Product variants	Product	Profile	Clamping Ø [mm] BU	Outer Ø [mm] AW	Head Ø [mm] DI	Connecting thread inside S	Total length [mm] l	In stock	Material no.
SPANNTOP ZW	Basic body ZW			46	61	M42 x 1 - LH	109,5	✔	10009430
	Clamping head ZW	●	5,0 - 32,0					✔	sk32zwr5,0-32,0
		■	7,0 - 9,0					-	sk32zwv7,0-9,0
			10,0 - 22,0					-	sk32zwv10,0-22,0
		⬢	7,0 - 9,0					✔	sk32zws7,0-9,0
			10,0 - 27,0					✔	sk32zws10,0-27,0
	Hydraulic changing fixture							✔	10014567
	Pneumatic pressure converter							-	10014711
	Assembling aid							✔	10015551
Conventional	Collet	●	6,0 - 28,0	46	60,4		120	-	9039er6,0-28,0
		■	7,0 - 9,0					-	9039ev7,0-9,0
			10,0 - 18,0					-	9039ev10,0-18,0
		⬢	7,0 - 9,0					-	9039es7,0-9,0
			10,0 - 25,0					-	9039es10,0-25,0

Feed tube

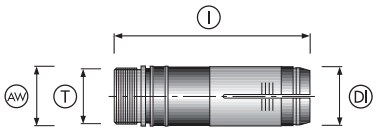



Product variants	Product	Profile	Clamping Ø [mm] BU	Outer Ø [mm] AW	Head Ø [mm] DI	Connecting thread outside T	Total length [mm] l	In stock	Material no.
RS system	Outer sleeve			35	33	M33 x 1,5	118	✔	10006307
	Inner collet steel	●	4,0 - 25,0					✔	rs25/st/r4,0-25,0
		■	7,0 - 9,0					-	rs25/st/v7,0-9,0
			10,0 - 17,0					-	rs25/st/v10,0-17,0
		⬢	6,0 - 9,0					-	rs25/st/s6,0-9,0
			10,0 - 22,0					-	rs25/st/s10,0-22,0
	Inner collet steel brass	●	4,0 - 25,0					-	rs25/sb/r4,0-25,0
		■	7,0 - 9,0					-	rs25/sb/v7,0-9,0
			10,0 - 17,0					-	rs25/sb/v10,0-17,0
		⬢	6,0 - 9,0					-	rs25/sb/s6,0-9,0
			10,0 - 22,0					-	rs25/sb/s10,0-22,0

Product variants	Product	Profile	Clamping Ø [mm] BU	Outer Ø [mm] AW	Head Ø [mm] DI	Connecting thread outside T	Total length [mm] l	In stock	Material no.
RS system	Inner collet SPH	●	4,0 - 25,0					-	rs25/sph/r4,0-25,0
		■	7,0 - 9,0					-	rs25/sph/v7,0-9,0
			10,0 - 17,0					-	rs25/sph/v10,0-17,0
		⬢	6,0 - 9,0					-	rs25/sph/s6,0-9,0
			10,0 - 22,0					-	rs25/sph/s10,0-22,0
	Inner collet KSB	●	7,0 - 23,5					-	rs25/ksb/r7,0-23,5
		■	7,0 - 9,0					-	rs25/ksb/v7,0-9,0
			10,0 - 17,0					-	rs25/ksb/v10,0-17,0
		⬢	7,0 - 9,0					-	rs25/ksb/s7,0-9,0
			10,0 - 21,0					-	rs25/ksb/s10,0-21,0
	Inner collet OXK	●	5,0 - 20,0					-	rs25/oxk/r5,0-20,0
			20,1 - 24,0					-	rs25/oxk/r20,1-24,0
	Wrench							✔	10008168
Conventional	Feedfinger	●	6,0 - 28,0	35	33	M33 x 1,5	118	-	9282er6,0-28,0
		■	7,0 - 9,0					-	9282ev7,0-9,0
			10,0 - 18,0					-	9282ev10,0-18,0
		⬢	7,0 - 9,0					-	9282es7,0-9,0
			10,0 - 22,0					-	9282es10,0-22,0

SPH = special cast coating; KSB = plastic coating; OXK = oxidized ceramic coating

Overview

Find what's important fast



Facts worth knowing

Conditions & Forms	600
Explanations & Glossary of clamping technology terms	608
Contact	612

Serrations for increased clamping power

	HN 01-F	Clamping Ø
	Multitude of small pointed teeth for round stock	10 – 100
		100.1 – 180

	HN 01-Z	Clamping Ø
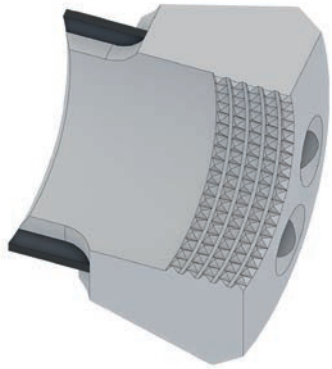	Fewer teeth for rolled material and extreme loads	10 – 100
		100.1 – 180

Custom diameter

In stock clamping heads and segmented clamping bushings can be enlarged or reduced by up to 0.5 mm. This allows the fast and economical production of intermediate clamping diameters.

Custom diameter
Enlargement of clamping diameter for clamping head
Reduction of clamping diameter for segmented clamping bushing [size S and larger]

Vulcanizing

New vulcanization is necessary as soon as there are signs of wear on the rubber, such as erosion, deep scratches or cracks, resulting from chips and cooling lubricants. For re-vulcanization, the old rubber coating is first removed and the single segments are cleaned. Then a special vulcanizing process is used to insert new rubber between the segments. After all protruding burrs have been removed the clamping element can be used again with the usual high-precision features.

Re-vulcanization of clamping element	
Clamping head Delivery after 7 work days [Rush surcharge + 25%, if shorter delivery times are desired.]	Size 32 / 42 / 52 / 65 / 80
	Size 100 / 125 / 120 / 140
	Size 160 / 180 / 200
Segmented clamping bushing Delivery after 7 work days [Rush surcharge + 25%, if shorter delivery times are desired.]	Clamping diameter [mm] 3 – 120
	Clamping diameter [mm] 121 – 220

Evening-out

If a clamping surface shows signs of light damage such as marks, scratches or other minor defects, this is not a reason to discard it in most cases. The evening-out process makes use of high-precision grinding to eliminate uneven areas on the clamping surface, to ensure clamping with the original clamping diameter. Clamping heads with a size of 160 or larger must be re-vulcanized when evened out.

Evening-out of clamping surface
Clamping head
Segmented clamping bushing

Our current General Terms and Conditions [GTC] are available at www.hainbuch.com

Coatings and inserts

	Coating				
	Diamond	KSB [plastic coating]	WK [carbide coating]	WKW [carbon coating]	ZSV [epoxy resin coating]
Properties	■ Higher power transmission	■ Prevention of part marking	■ Higher power transmission ■ Higher wear resistance	■ Reduction of friction and adhesion wear ■ Higher wear resistance ■ Improved resistance to corrosion	■ Prevention of part marking
Application	■ Clamping surfaces of segmented clamping bushings ■ Clamping heads ■ Workpiece end-stop	■ RS inner collets	■ Clamping surfaces of RS inner collets ■ Collet chucks ■ Segmented clamping bushings ■ Clamping heads	■ Collet chucks ■ Clamping element receptions ■ Segmented clamping bushings ■ Clamping heads	■ Smooth clamping surfaces of collets ■ Segmented clamping bushings ■ Clamping heads
Note		■ Bars should be pointed at both ends ■ Only partly suitable for relatively small bores [under Ø 10 mm] ■ For large quantities or if loading magazines are used, an OXK coating is better			
Workpiece material	All	All	All	All	All
Hardness	n.a.	90 Shore A	65 HRC	3000 HV [approx. 70 HRC]	approx. 80 Shore D
Recoating	upon request	not possible	possible	upon request	possible

Loading		Base material	
HM [carbide insert]	OXK [oxide ceramic insert]	SPH	Steel bronze
■ Higher wear resistance	■ Higher wear resistance ■ Prevention of part marking	■ Prevention of part marking ■ Higher wear resistance than plastic coating	■ Prevention of part marking ■ Higher wear resistance than plastic coating
■ RS inner collets ■ Collet chucks	■ RS inner collets	■ RS inner collets	■ RS inner collets
Bars should be pointed at both ends			■ Not recommended for soft materials such as brass or aluminum ■ Bars should be pointed at both ends
All	All	■ Steels ■ Brass ■ Aluminum	■ Steels ■ Hard metals
75 HRC	90 HRC	approx. 180 HB	approx. 160 HV
upon request	possible	upon request	not possible

Fax +49 7144.18826 | sales@hainbuch.de

Short taper. Spindle data for configuration of drawtube adapter

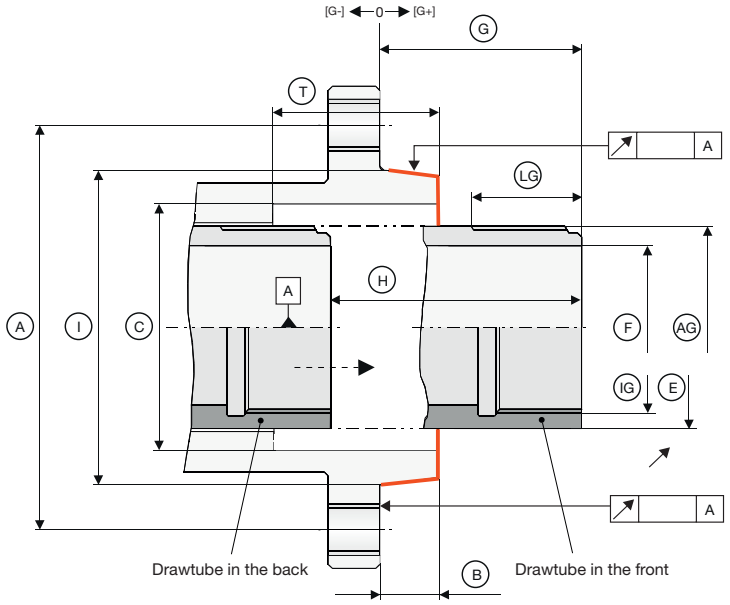

Spindle nose		Size
Bolt hole circle	A	mm
Amount of threads		x M
Height of spindle nose	B	mm
Spindle bore Ø	C	mm
Outside thread or Inside thread	AG IG	x M
Thread length	LG	mm
Drawtube O.D. Ø	E	mm
Drawtube I.D. Ø	F	mm
Front position drawtube [-/+]	G	mm
Stroke [Clamping cylinder]	H	mm
Spindle nose Ø	I	mm
Spindle bore depth	T	mm

Offer- / Order-No.:	
Company address / Name:	
Machine type:	

Fax +49 7144 .18826 | sales@hainbuch.de

Outside fitting. Spindle data for configuration of drawtube adapter

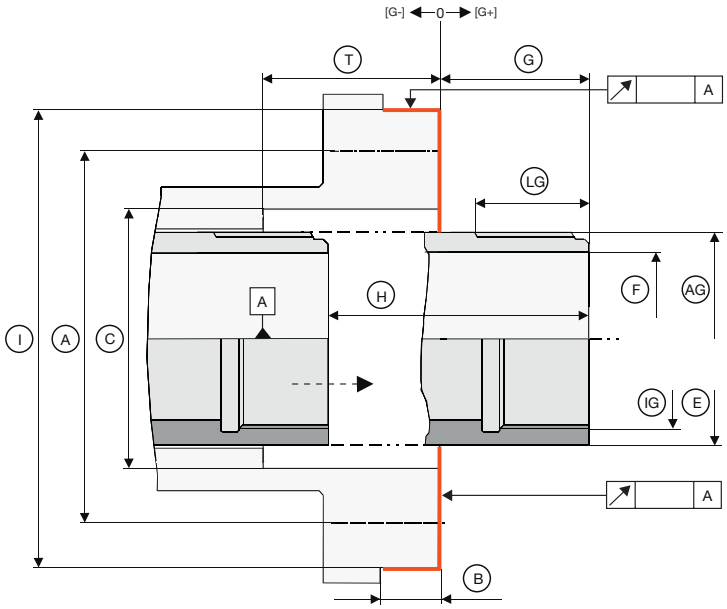

Spindle nose		Size
Bolt hole circle	A	mm
Amount of threads		x M
Height of spindle nose	B	mm
Spindle bore Ø	C	mm
Outside thread or inside thread	AG IG	x M
Thread length	LG	mm
Drawtube O.D. Ø	E	mm
Drawtube I.D. Ø	F	mm
Front position drawtube [-/+]	G	mm
Stroke [Clamping cylinder]	H	mm
Spindle nose Ø	I	mm
Spindle bore depth	T	mm

Offer- / Order-No.:	
Company address / Name:	
Machine type:	

Fax +49 7144 .18826 | sales@hainbuch.de

Inside fitting. Spindle data for configuration of drawtube adapter

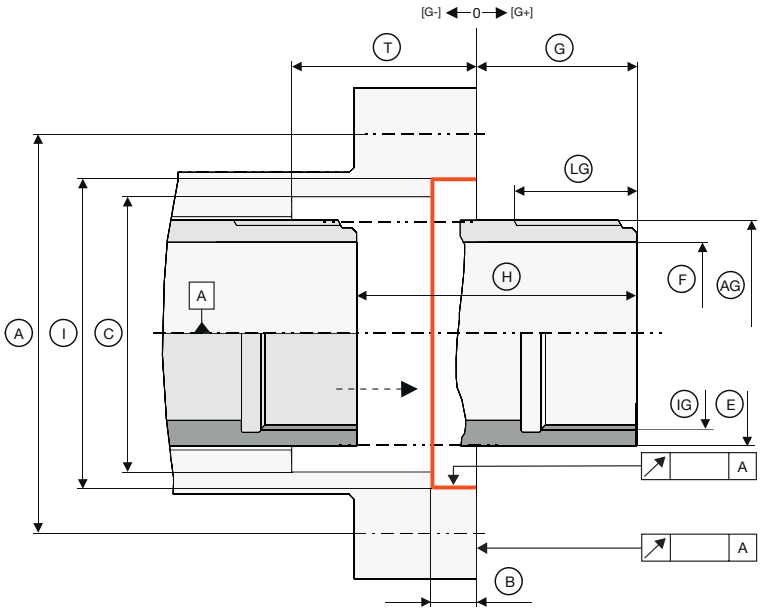

Spindle nose		Size
Bolt hole circle	A	mm
Amount of threads		x M
Height of spindle nose	B	mm
Spindle bore Ø	C	mm
Outside thread or inside thread	AG IG	x M
Thread length	LG	mm
Drawtube O.D. Ø	E	mm
Drawtube I.D. Ø	F	mm
Front position drawtube [-/+]	G	mm
Stroke [Clamping cylinder]	H	mm
Spindle nose Ø	I	mm
Spindle bore depth	T	mm

Offer- / Order-No.:	
Company address / Name:	
Machine type:	

Fax +49 7144 .18826 | sales@hainbuch.de

Connection machine data.

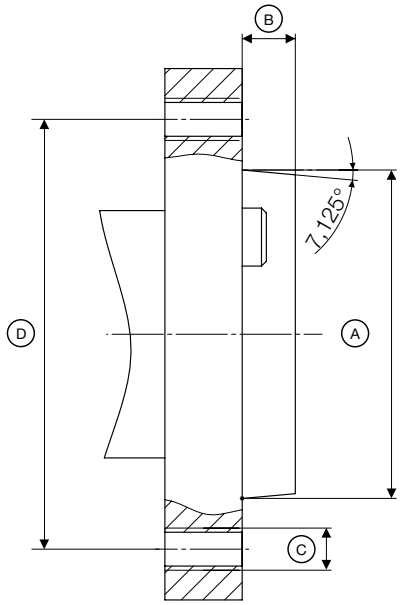

Standard spindle: DIN 55026					
Short taper size	A	B	C		D
	Spindle nose Ø [mm]	Spindle nose height [mm]	Thread		Bolt hole circle [mm]
4	63.521	11,0	11xM10		82.6
5	82.573	13,0	11xM10		104.8
6	106.385	14,0	11xM12		133.4
8	139.731	16,0	11xM16		171.4
11	196.883	18,0	11xM20		235.0
15	285.791	19,0	12xM24		330.2
Standard spindle: DIN ISO 702-1 and ASA B5.9 A2, B2					
Short taper size	A	B	C		D
	Spindle nose Ø [mm]	Spindle nose height [mm]	Thread		Bolt hole circle [mm]
4	63.525	11,1	11xM10	11 x 7/16-14 UNC	82.6
5	82.575	12,7	11xM10	11 x 7/16-14 UNC	104.8
6	106.390	14,3	11xM12	11 x 1/2-13 UNC	133.4
8	139.735	15,9	11xM16	11 x 5/8-11 UNC	171.4
11	196.885	17,5	11xM20	11 x 3/4-10 UNC	235.0
15	285.800	19,0	12xM24	12 x 7/8-9 UNC	330.2

Conversion table inches mm

Inch	Inch decimal	mm
< 1"		
1/16"	0.0625"	1.587 mm
1/8"	0.1250"	3.175 mm
3/16"	0.1875"	4.7625 mm
1/4"	0.2500"	6.35 mm
5/16"	0.3125"	7.9375 mm
3/8"	0.3750"	9.525 mm
7/16"	0.4375"	11.1125 mm
1/2"	0.5000"	12.7 mm
9/16"	0.5625"	14.2875 mm
5/8"	0.6250"	15.875 mm
11/16"	0.6875"	17.4625 mm
3/4"	0.7500"	19.05 mm
13/16"	0.8125"	20.6375 mm
7/8"	0.8750"	22.225 mm
15/16"	0.9375"	23.8125 mm
1"	1.0000"	25.4 mm
1.1/16"	1.0625"	26.9875 mm
1.1/8"	1.1250"	28.575 mm
1.3/16"	1.1875"	30.1625 mm
1.1/4"	1.2500"	31.75 mm
1.5/16"	1.3125"	33.3375 mm
1.3/8"	1.3750"	34.925 mm
1.7/16"	1.4375"	36.5125 mm
1.1/2"	1.5000"	38.1 mm
1.9/16"	1.5625"	39.6875 mm
1.5/8"	1.6250"	41.275 mm
11/16"	1.6875"	42.8625 mm
1.3/4"	1.7500"	44.5 mm
1.13/16"	1.8125"	46.0375 mm
1.7/8"	1.8750"	47.625 mm
1.15/16"	1.9375"	49.2125 mm

Inch	Inch decimal	mm
2"	2.0000"	50.8 mm
2.1/16"	2.0625"	52.3875 mm
2.1/8"	2.1250"	53.975 mm
2.3/16"	2.1875"	55.5625 mm
2.1/4"	0.2500"	57.15 mm
2.5/16"	2.3125"	58.7375 mm
2.3/8"	2.3750"	60.325 mm
2.7/16"	2.4375"	61.9125 mm
2.1/2"	2.5000"	63.5 mm
2.9/16"	2.5625"	65.0875 mm
2.5/8"	2.6250"	66.675 mm
2.11/16"	2.6875"	68.2625 mm
2.3/4"	2.7500"	69.85 mm
2.13/16"	2.8125"	71.4375 mm
2.7/8"	2.8750"	73.025 mm
2.15/16"	2.9375"	74.6125 mm
3"	3.0000"	76.2 mm
3.1/16"	3.0625"	77.7875 mm
3.1/8"	3.1250"	79.375 mm
3.3/16"	3.1875"	80.9625 mm
3.1/4"	3.2500"	82.55 mm
3.5/16"	3.3125"	84.1375 mm
3.3/8"	3.3750"	85.725 mm
3.7/16"	3.4375"	87.3125 mm
3.1/2"	3.5000"	88.9 mm
3.9/16"	3.5625"	90.4875 mm
3.5/8"	3.6250"	92.075 mm
3.11/16"	3.6875"	93.6625 mm
3.3/4"	3.7500"	95.25 mm
3.13/16"	3.8125"	95.8375 mm
3.7/8"	3.8750"	98.425 mm
3.15/16"	3.9375"	100.0125 mm
4"	4.0000"	101.6 mm

Measuring run-out accuracy: Examples

	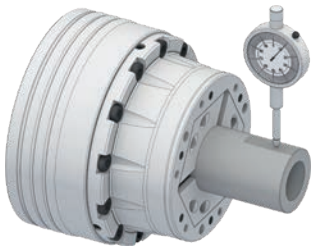	
Variant	**Chuck, e.g. TOPlus mini**	**Mandrel, e.g. MAXXOS**
Description	Measured on a ground test shaft in accordance with HAINBUCH standard, at a defined distance from the chuck	Measured on a ground run-out control ring in accordance with HAINBUCH standard

Color explanation: Graphics in detail

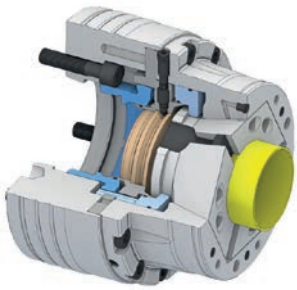

Light gray	External components, e.g. clamping element reception, flange, steel segments of clamping elements
Dark gray	Internal components, e.g. centering disc; accessory components
Light blue	Coupling through which clamping is effected directly on the clamping element
Dark blue	Components involved in clamping from the drawtube to the coupling; CENTREX
Brown	[Base] end-stop
Black	Standard items, vulcanized rubber in clamping heads; SE changing fixture
Red	Vulcanized rubber in segmented clamping bushings; chip protection; RD changing fixture
Yellow	Workpiece

Explanations & Glossary of clamping technology terms



Actuating torque	Torque with which the clamping device is actuated, e.g. with a torque wrench.
Base end-stop	Workpiece end-stop within the chuck.
Centrifugal force	Occurs at rotation, with a jaw chuck for example. The jaws are forced outward and the clamping force decreases. TOPlus and SPANNTOP on the other hand enclose the clamping head with their chuck body and therefore are virtually loss-free.
Clamped position	Defined position of the clamping element, in which the nominal diameter is clamped, if the workpiece does not have any tolerance deviation.
Clamping force, radial [frad]	Force with which the workpiece is radially clamped by the clamping device.
Clamping head protrusion length	Front nose extension of the clamping head that projects beyond the face of the chuck.
Clamping of finished material	Workpiece that is clamped on a finish-machined surface.
Clamping of raw material	Workpiece that is clamped on an unmachined surface.
Clamping range	Indicates the total range of the clamping diameters that can be covered with the respective size of the clamping device. Multiple clamping elements are required to use the entire range.

Clamping reserve in Ø	Additional clamping distance of the clamping device for spanning negative workpiece tolerances.
Concentric precision	Deviation [difference between the greatest and lowest dial gauge indication] of a test piece at rotation relative to the reference axis.
Draw force / compression force axial [fax]	Force, with which the clamping device is actuated, e.g. by a clamping cylinder.
Drawtube position	Dimensions of the front edge of the drawtube inside / outside of the machine spindle to the bolt-on surface of the clamping device on the spindle.
Holding power	The force with which the workpiece is clamped in the clamping device.
RD	Round geometry, e.g. clamping head outer geometry SPANNTOP.
Release stroke in Ø	Distance of the clamping element from the theoretical clamping position to the release position, in which the workpiece can be removed or the clamping element can be changed.
Repeatability	Deviation that can be measured as the spread of two successive assembly and disassembly processes. It cannot be corrected manually, it is intrinsic.
Rigidity	Resistance of the clamping device against plastic deformation due to force or a moment.
SE	Hexagonal geography e.g. clamping head outer geometry TOPlus.
Span / recommended workpiece tolerance	Clamping range, in which the workpiece tolerance should be.
Spindle nose	Standardized interface between clamping device and machine spindle.
Torsional safety	Positioning of the clamping element in the clamping device.
Vulcanization	Procedure for producing high-quality rubber-steel combinations. It is used with our clamping heads, for example.

We are here for you!





Order hotline **+49 7144.907-333**
Delivery hotline **+49 7144.907-222**

Homepage **www.hainbuch.com**

E-Mail **sales@hainbuch.de**

You will find our CAD models at the PARTcommunity:
hainbuch.partcommunity.com

HAINBUCH worldwide

- Headquarters in Marbach am Neckar, Germany
- 5 German locations
- 11 international subsidiaries
- approx. 40 agencies worldwide

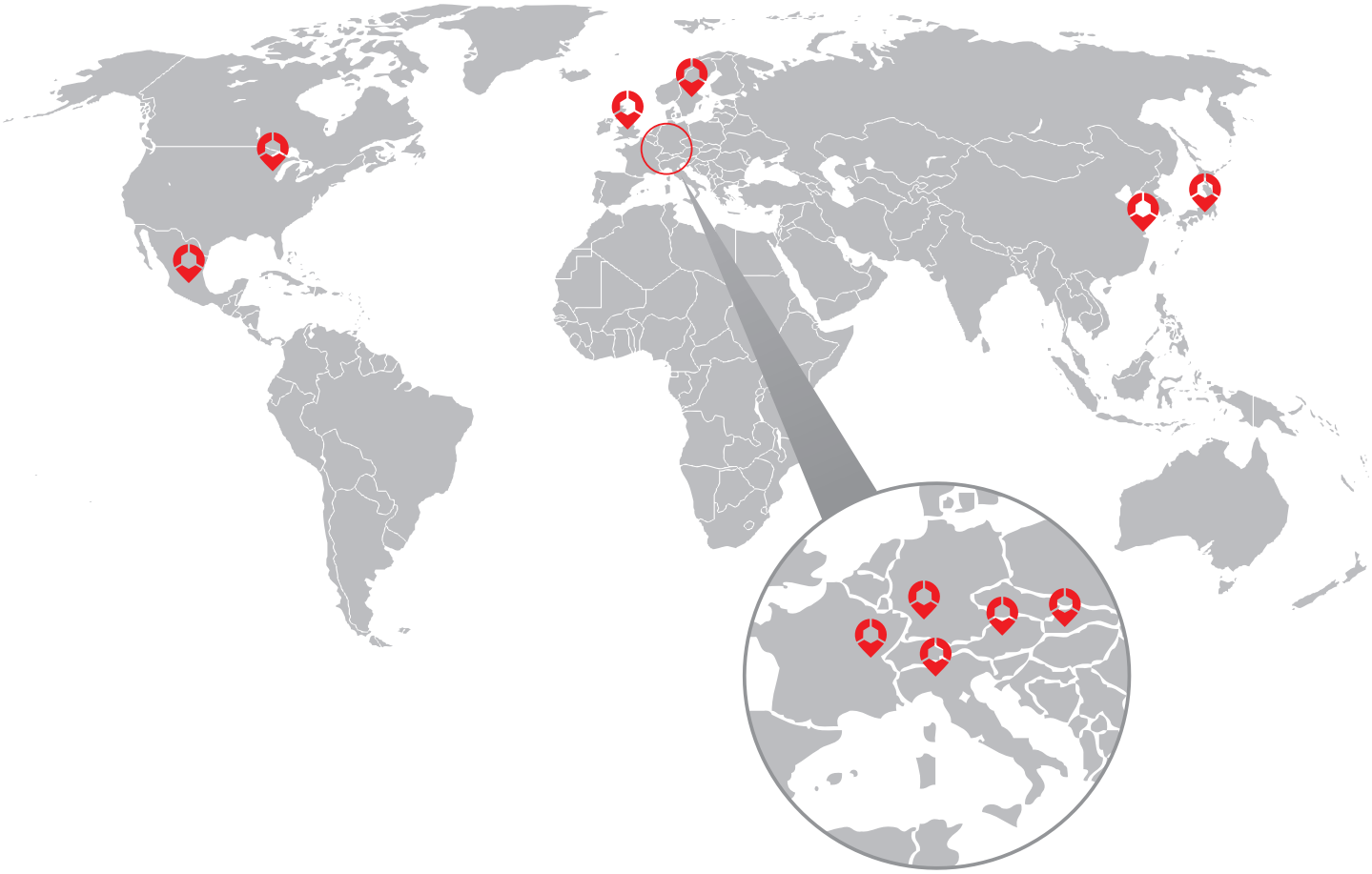

Asia

China	●	HAINBUCH Shanghai Co. Ltd. WORKHOLDING TECHNOLOGY www.hainbuch.cn
India		M'la Sales Corporation www.mla-sales.com
Indonesia		PT. STAHL ARBEIT www.stahl-arbeit.com
Israel		MTM Ltd. www.mtm.co.il
		M.K. Sales Ltd. www.mk-sales.com
Japan	●	HAINBUCH Japan K.K. WORKHOLDING SOLUTIONS www.hainbuch.jp
Korea		Axis Holding Co., Ltd. www.axis-holding.co.kr
		K2TECH Co., Ltd. www.k2tech.co.kr
Malaysia Singapore		Jebsen & Jessen Technology [S] Pte Ltd. Industrial Services www.industrial.jjsea.com/doc/Tooling
Taiwan	●	HAINBUCH Shanghai Co. Ltd. WORKHOLDING TECHNOLOGY www.hainbuch.cn
	●	HAINBUCH GmbH SPANNENDE TECHNIK www.hainbuch.com
Thailand		ITECH TRADING CO., LTD. https://www.itech-trading.com/
United Arab Emirates		SVRS Gerneral Trading LLC www.svrs-mena.com
Vietnam		WOLFRAM INDUSTRIAL SERVICE JSC www.wolfram.vn

Australia / New Zealand

Australia **New Zealand**	**Romheld Automation Pty Ltd.** www.romheld.com.au

Europe

Austria	**HAINBUCH in Austria GmbH** **SPANNENDE TECHNIK** www.hainbuch.at
Belgium	**BIS Technics bvba/sprl** www.bistechnics.com
Bulgaria	**Aton MI Ltd** www.smartcnc.eu
Czech Republic	**TMC CR s.r.o.** www.tmccr.cz
Denmark	**Jørn B. Herringe A/S** www.jbh-tools.dk
Estonia **Latvia** **Lithuania**	**DV-Tools OÜ** www.dv-tools.ee
Finland	**Oy Maanterä Ab** www.maantera.fi
France	**HAINBUCH France Sarl** **TECHNIQUE DE SERRAGE** www.hainbuch.fr
Germany	**HAINBUCH GmbH** **SPANNENDE TECHNIK** www.hainbuch.com
Great Britain	**HAINBUCH UK Ltd.** **WORKHOLDING TECHNOLOGY** www.hainbuch.co.uk **Leader Chuck Systems Limited** www.leaderchuck.com
Greece	**CNCMECHANICS** www.cncmechanics.gr
Hungary	**GIMEX Hydraulik GmbH** www.gimex.hu
Ireland	**HAINBUCH UK Ltd.** **WORKHOLDING TECHNOLOGY** www.hainbuch.co.uk
Italy	**HAINBUCH Italia srl** **TECNICA DEL SERRAGGIO** www.hainbuch.it
Netherlands	**BIS Specials** **[Brandenburg Industry Service Dongen B.V.]** www.bisspecials.com
Norway	**BERGSLI Metallmaskiner AS** www.bergslimetallmaskiner.no
Poland	**ARCO Andrzej Rudenko** www.arcotools.pl **BIM Sp.z.o.o.** www.bim-polska.pl
Romania Representative for Moldova, Muntenia, Dobrogea and Oltenia	**Banatech srl – connecting technologies** www.banatech.ro **Romsan** www.romsan.eu
Russia	**ROSNA Engineering NT LLC** www.rosna.spb.ru **UNIMATIC Ltd.** www.unimatic.ru **KTC RU Ltd.** www.ktckazan.ru
Slovakia	**TNS s.r.o.** www.tnssro.eu **HAINBUCH GMBH** **WORKHOLDING TECHNOLOGY** www.hainbuch.com milan.pavlicka@hainbuch.sk
Slovenia	**Elmetool d.o.o.** www.elmetool.si
Spain **Portugal**	**ATM S.L** www.atmbarcelona.com
Sweden	**HAINBUCH Svenska AB** **SPÄNNANDE TEKNIK** www.hainbuch.se
Switzerland	**Utilis AG** **Präzisionswerkzeuge** www.utilis.com
Turkey	**Hidkom** **Organize Sanayi Bölgesi** www.hidkom.com

America

Argentina	**HAINBUCH México** **TECNOLOGÍA EN SUJECIÓN** www.hainbuch.mx
Brazil	**Sanposs Tecnologia** **Suprimentos e Consultoria Internacional Ltda.** www.sanposs.com.br
Canada	**HAINBUCH America Corp.** **WORKHOLDING TECHNOLOGY** www.hainbuchamerica.com
Representative for Ontario and Québec	**J. Winkel & Associates Inc.** www.winkel.ca
Mexico	**HAINBUCH México** **TECNOLOGÍA EN SUJECIÓN** www.hainbuch.mx
USA	**HAINBUCH America Corp.** **WORKHOLDING TECHNOLOGY** www.hainbuchamerica.com

Africa

North Africa	**SVRS General Trading LLC** www.svrs-mena.com
South Africa	**Retecon [PTY] Ltd.** www.retecon.co.za **CNC Support** www.cncsupport.co.za

HAINBUCH GMBH · SPANNENDE TECHNIK
Postfach 12 62 · 71667 Marbach · Erdmannhäuser Straße 57 · 71672 Marbach · Germany
Tel. +49 7144.907-0 · Fax +49 7144.18826 · sales@hainbuch.de
www.hainbuch.com

5000 / 06.22 Material no. 60000456 Subject to changes.